Display fridge

Instruction manual





EN **Display fridge** 2
Instruction manual

NL **Koeling met Glasdeur** 10
Handleiding

FR **Présentoir réfrigéré** 18
Mode d'emploi

DE **Display-Kühlschrank** 26
Bedienungsanleitung

IT **Frigorifero da esposizione** 34
Manuale di istruzioni

ES **Frigorífico exhibidor** 42
Manual de instrucciones

Model • Modèle • Modell • Modello • Modelo • Malli:
DM075 / DM076 / GH426 / GH427

Safety Instructions

- Position on a flat, stable surface.
- A service agent/qualified technician should carry out installation and any repairs if required. Do not remove any components or service panels on this product.
- Consult Local and National Standards to comply with the following:
  - Health and Safety at Work Legislation
  - BS EN Codes of Practice
  - Fire Precautions
  - IEE Wiring Regulations
  - Building Regulations
- DO NOT use jet/pressure washers to clean the appliance.
- DO NOT use the appliance outside.
- DO NOT use this appliance to store medical supplies.
- DO NOT allow oil or fat to come into contact with the plastic components or door seal. Clean immediately if contact occurs.
- DO NOT store products on top of the appliance.
- Bottles that contain a high percentage of alcohol must be sealed and placed vertically in the refrigerator.
- Always carry, store and handle the appliance in a vertical position and move by holding the base of the appliance.
- Always switch off and disconnect the power supply to the unit before cleaning.
- Keep all packaging away from children. Dispose of the packaging in accordance with the regulations of local authorities.
- If the power cord is damaged, it must be replaced by a POLAR agent or a recommended qualified technician in order to avoid a hazard.
- Children should be supervised to ensure that they do not play with the appliance.

DM075-DM076_GH426-GH427_ML_A5_v9_20221125.indb 2 2022/11/25 11:49

- This appliance is not intended for use by persons (including children) with reduced physical, sensory or mental capabilities, or lack of experience or knowledge, unless they have been given supervision or instruction concerning the use of the appliance by a person responsible for their safety.
- Polar recommend that this appliance should be periodically tested (at least annually) by a Competent Person. Testing should include, but not be limited to: Visual Inspection, Polarity Test, Earth Continuity, Insulation Continuity and Functional Testing.
- Polar recommend that this product is connected to a circuit protected by an appropriate RCD (Residual Current Device).

Caution: Risk of Fire 

- Do not store explosive substances such as aerosol cans with a flammable propellant in this appliance.



Warning: Keep all ventilation openings clear of obstruction. Unit should not be boxed in without adequate ventilation.

- **Warning:** Do not use mechanical devices or other means to accelerate the defrosting process, other than those recommended by the manufacturer.
- **Warning:** Do not damage the refrigerant circuit.
- **Warning:** Do not use electrical appliances inside the food storage compartments of the appliance.

Introduction

Please take a few moments to carefully read through this manual. Correct maintenance and operation of this machine will provide the best possible performance from your POLAR product.

DM075-DM076_GH426-GH427_ML_A5_v9_20221125.indb 3 2022/11/25 11:49

Pack Contents

The following is included:

POLAR Display fridge
Keys x 2
Door handle assembly
Shelves
Instruction Manual

POLAR prides itself on quality and service, ensuring that at the time of unpacking the contents are supplied fully functional and free of damage. Should you find any damage as a result of transit, please contact your POLAR dealer immediately.

Installation

Note: Not for use in vans or trailers, food trucks or similar vehicles.
If the unit has not been stored or moved in an upright position, let it stand upright for approximately 12 hours before operation. If in doubt allow to stand.

1. Remove appliance from the packaging. Make sure that all protective plastic film and coatings are thoroughly removed from all surfaces.
2. To optimize performance and longevity, ensure a minimum clearance of 2.5cm is maintained between the unit and walls and other objects, with a minimum 20cm clearance on the top. **NEVER LOCATE NEXT TO A HEAT SOURCE.**

Note: Before using the appliance for the first time, clean the shelves and interior with soapy water then dry well.

3. Set the brakes on the castors to keep the appliance in position.

Mounting the door handle

1. Pull the door gasket aside to expose the 2 pre-drilled holes. Insert the screws.

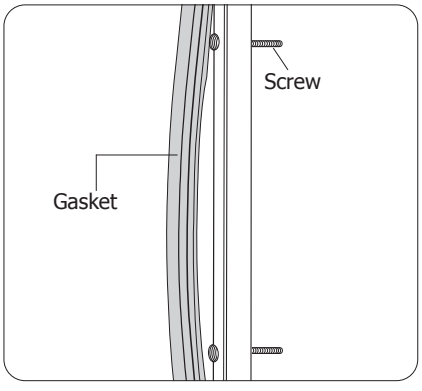

2. Mount sleeve on the other end of screw. Tighten screws to fix the handle in place.

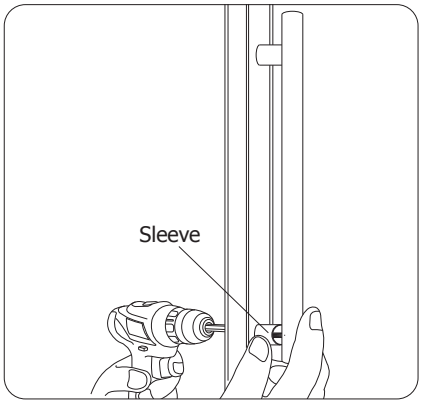

Reversing the door

Depending on the location of the appliance, it may be necessary to change the direction the door opens by changing the side of the door handle.

To reverse the door handle:

1. The door handle is on the left side originally.
2. Disassemble the front panel.

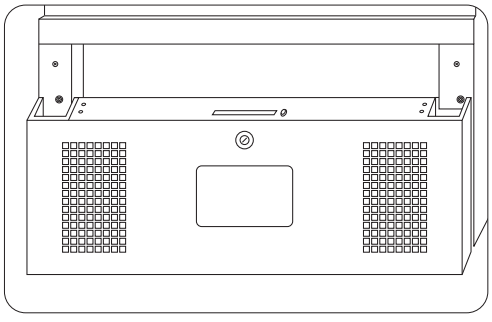

3. Cut the slot on the front panel and install the hinge inside.

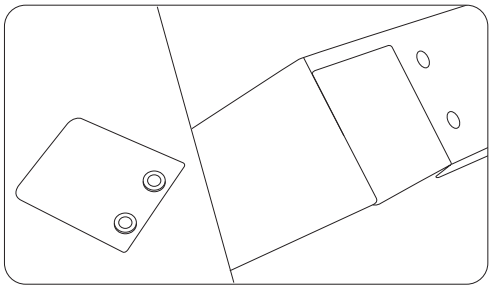

DM075-DM076_GH426-GH427_ML_A5_v9_20221125.indb 4 2022/11/25 11:49

4. Disassemble the right lower hinge and install it on the left lower side.

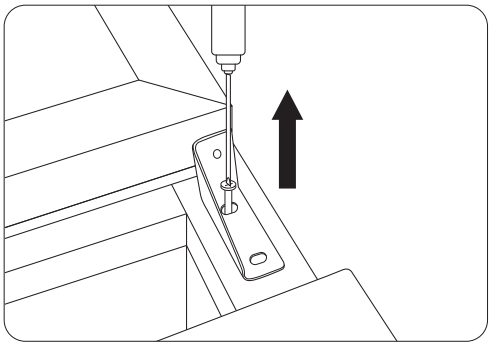

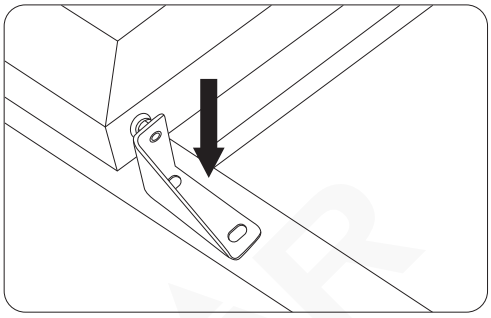

5. Reverse the door.

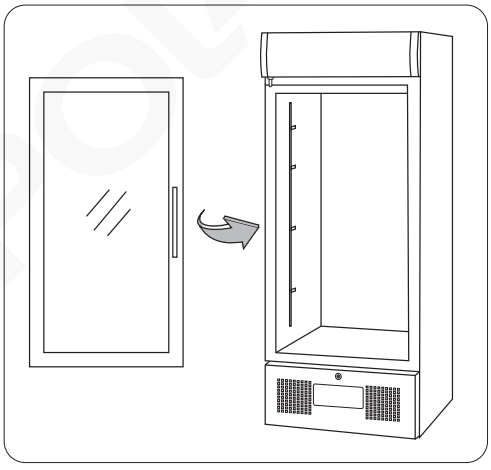

6. Disassemble the right upper hinge.

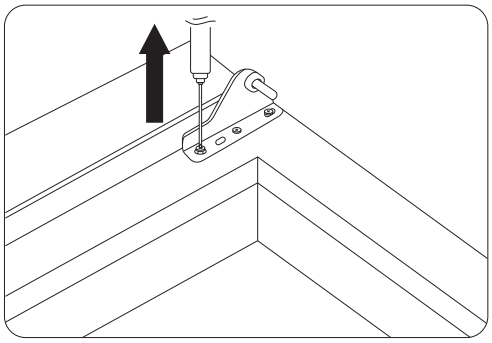

7. Install the left upper hinge.

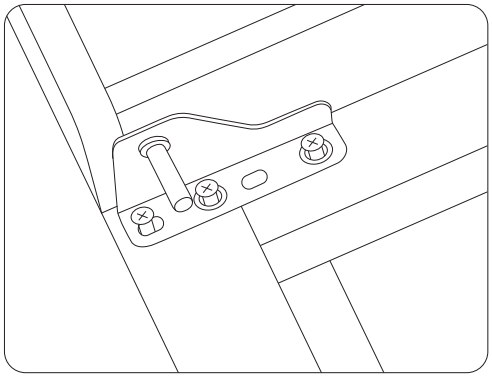

8. At last, install the front panel. Now the door handle is on the right side.

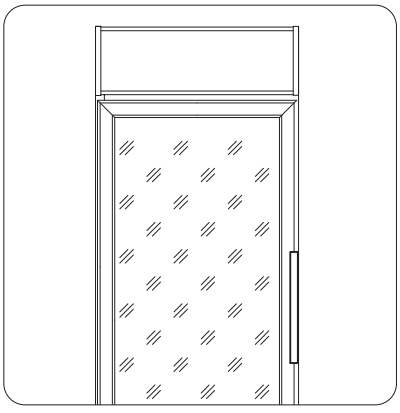

POLAR

Operation

Control Panel

The control panel is located below the doors on the front of the appliance.

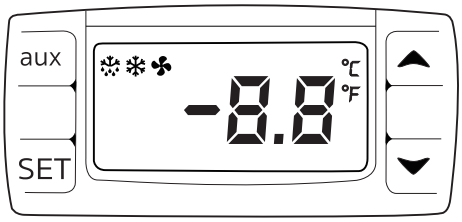

To unlock / Lock the keyboard press ▲ and ▼ together for 3 seconds. Display will flash PON (unlocked) / POF (locked).

Turn On

1. Close the door of the appliance.
2. Connect the appliance to a mains power supply.
3. Turn the light switches On [I] or Off [O] as desired.

Set the Operating Temperature

1. Press the **SET** button. The display will flash.
2. Press the ▲ or ▼ buttons to display the required temperature.
3. Press the **SET** button to store the temperature.

Manual Defrost

Press and hold the defrost button "**aux**" for 2 seconds to begin a manual defrost. The defrost light illuminates.

Storing Food

To get the best results from your POLAR appliance, follow these instructions:

- Only store foodstuffs in the appliance when it has reached the correct operating temperature.
- Do not place uncovered items as below inside the appliance, as this can lead to a damaged and leaking evaporator, and thus void your warranty: hot food, hot liquids, acidic fluids, acidic products.
- Wrap or cover food where possible.
- Do not obstruct the fans inside the appliance.
- Avoid opening the doors for prolonged periods of time.

Lock/Unlock the Doors

- A lock is fitted to the door to ensure foodstuffs are kept secure within your POLAR appliance.
- Use the keys provided to lock/unlock the door.

Cleaning, Care & Maintenance

- Switch off and disconnect from the power supply before cleaning.
- Clean the interior of the appliance as often as possible.
- Do not use abrasive cleaning agents. These can leave harmful residues.
- Clean the door seal with warm soapy water.
- Always wipe dry after cleaning.
- Do not allow water used in cleaning to run through the drain hole into the evaporation pan.
- Take care when cleaning the rear of the appliance. Sharp edges can cut.

Condensation and ice will form with frequent and prolonged opening of the doors. Operating outside of the recommend temperature range and placing next to a heat source will also increase the amount of ice and condensation.
Excessive ice will result in longer running times that will increase energy consumption and increase the deterioration of components.

Replacing the Interior Lamp

WARNING: Allow the lamp to cool before replacing. The lamp remains hot immediately after use.

1. Turn Off and disconnect the appliance from the mains power supply.
2. Unscrew the plastic lamp cover.
3. Remove the lamp by twisting it from the lamp sockets.
4. Insert the new lamp and replace the cover.

DM075-DM076_GH426-GH427_ML_A5_v9_20221125.indb 6 2022/11/25 11:49

Cleaning the Condenser

Periodically cleaning the condenser can extend the life of the appliance.
POLAR recommend that a POLAR agent or qualified technician clean the condenser.

Troubleshooting

A qualified technician must carry out repairs if required.

Fault	Probable Cause	Solution
The appliance is not working	The unit is not switched on	Check the unit is plugged in correctly and switched on
	Plug or lead is damaged	Replace Plug or lead
	Fuse in the plug has blown	Replace the fuse
	Mains power supply fault	Check mains power supply
The appliance turns on, but the temperature is too high/low	Too much ice on the condenser	Defrost the appliance
	Condenser blocked with dust	Clean the condenser
	Doors are not shut properly	Check doors are shut and seals are not damaged
	Appliance is located near a heat source or air flow to the condenser is being interrupted	Move the refrigerator to a more suitable location
	Ambient temperature is too high	Increase ventilation or move appliance to a cooler position
	Unsuitable foodstuffs are being stored in the appliance	Remove any excessive hot foodstuffs or blockages to the fan
	Appliance is overloaded	Reduce the amount of food stored in the appliance
The appliance is leaking water	The appliance is not properly levelled	Adjust the screw feet to level the appliance (if applicable)
	The discharge outlet is blocked	Clear the discharge outlet
	Movement of water to the drain is obstructed	Clear the floor of the appliance (if applicable)
	The water container is damaged	Replace the water container
The appliance is unusually loud	Loose nut/screw	Check and tighten all nuts and screws
	The appliance has not been installed in a level or stable position	Check installation position and change if necessary
The display lamp does not illuminate	Lamp needs replacing	Replace the lamp

DM075-DM076_GH426-GH427_ML_A5_v9_20221125.indb 7 2022/11/25 11:49

Technical Specifications

Note: Due to our continuing program of research and development, the specifications herein may subject to change without notice.

Model	Voltage	Power	Current	Temperature Range	Refrigerant	Dimensions H x W x D mm	Weight (kg)
DM075/GH426	220-240V~ 50Hz	146W	1A	2°C ~ 8°C	R600a	1692 x 530 x 575	124
DM076/GH427		146W	1.3A	2°C ~ 8°C	R600a	1982 x 620 x 570	134

Model	Maximum load of each shelf	Gross Capacity (L)	Net usable capacity (L)
DM075/GH426	12.5kg	218	180
DM076/GH427	15kg	368	225

Note: For optimal product performance and efficiency, please ensure to mind the net usable capacity (load limit) when filling.

Impact of temperature settings on food waste:
In order to reduce food waste from decomposition or dehydration, this appliance should be operated in its designated operating range.
Optimum temperature for food storage: 4°C

To order spare parts please contact your Polar Stockist:

https://www.polar-refrigerator.com/stockist

Minimum period of spares parts to be available:
Door handles, door hinges, knobs, dials and buttons, door gaskets, peripheral trays, baskets and racks for storage, as appropriate to the appliance, will be made available to both end users and professional users for a minimum of eight years after the last unit of the model is placed on the market. A broader selection of parts will also be made available to Professional users for this period.

Model information can be found on the product database:

https://eprel.ec.europa.eu/screen/product/refrigeratingappliancesdirectsalesfunction

Model information can be found on the product:
The Model Identifier can usually be found on the inside wall and on the reverse of the unit.

Note: Polar offers a 2 year minimum warranty, please contact the authorised representative for more details.

DM075-DM076_GH426-GH427_ML_A5_v9_20221125.indb 8 2022/11/25 11:49

Electrical Wiring

POLAR appliances are supplied with a 3 pin BS1363 plug and lead.

The plug is to be connected to a suitable mains socket.

POLAR appliances are wired as follows:

- Live wire (coloured brown) to terminal marked L
- Neutral wire (coloured blue) to terminal marked N
- Earth wire (coloured green/yellow) to terminal marked E



This appliance must be earthed.

If in doubt consult a qualified electrician.

Electrical isolation points must be kept clear of any obstructions. In the event of any emergency disconnection being required they must be readily accessible.

Disposal

EU regulations require refrigeration product to be disposed of by specialist companies who remove or recycle all gasses, metal and plastic components.

Consult your local waste collection authority regarding disposal of your appliance. Local authorities are not obliged to dispose of commercial refrigeration equipment but may be able to offer advice on how to dispose of the equipment locally.

Alternatively call the POLAR helpline for details of national disposal companies within the EU.

Compliance

The WEEE logo on this product or its documentation indicates that the product must not be disposed of as household waste. To help prevent possible harm to human health and/or the environment, the product must be disposed of in an approved and environmentally safe recycling process. For further information on how to dispose of this product correctly, contact the product supplier, or the local authority responsible for waste disposal in your area.



POLAR parts have undergone strict product testing in order to comply with regulatory standards and specifications set by international, independent, and federal authorities.

POLAR products have been approved to carry the following symbol:



All rights reserved. No part of these instructions may be produced or transmitted in any form or by any means, electronic, mechanical, photocopying, recording or otherwise, without the prior written permission of POLAR.
Every effort is made to ensure all details are correct at the time of going to press, however, POLAR reserve the right to change specifications without notice.

DM075-DM076_GH426-GH427_ML_A5_v9_20221125.indb 9 2022/11/25 11:49

DECLARATION OF CONFORMITY

• Conformiteitsverklaring • Déclaration de conformité • Konformitätserklärung • Dichiarazione di conformità • • Declaración de conformidad

Equipment Type • Uitrustingstype • Type d'équipement • Gerätetyp • Tipo di apparecchiatura • Tipo de equipo		**Model** • Modèle • Modell • Modello • Modelo	
1. G-Series Upright Display Fridge White - 218Ltr 2. G-Series Upright Display Fridge White - 350Ltr	3. G-Series Upright Display Fridge Black - 218Ltr 4. G-Series Upright Display Fridge Black - 350Ltr	1. DM075 (-E & -A) 2. DM076 (-E & -A)	3. GH426 (-E & -A) 4. GH427 (-E & -A)

Application of Territory Legislation & Council Directives(s) Toepassing van Europese Richtlijn(en) • Application de la/des directive(s) du Conseil • Anwendbare EU-Richtlinie(n) • Applicazione delle Direttive • Aplicación de la(s) directiva(s) del consejo	**Machinery Directive 2006/42/EC** **Supply of Machinery (Safety) Regulations 2008** (BS) EN 60335-1:2012 +A11:2014 +A13:2017 +A1:2019 +A14:2019 (BS) EN 60335-2-89:2010 +A1:2016 +A2:2017 (BS) EN 62233:2008 **Electro-Magnetic Compatibility (EMC) Directive 2014/30/EU - recast of 2004/108/EC** **Electromagnetic Compatibility Regulations 2016 (S.I. 2016/1091)** (BS) EN 55014-1:2017 (BS) EN 55014-2:2015 (BS) EN 61000-3-2:2014 (BS) EN 61000-3-3:2013 **Ecodesign energy-related products Directive 2009/125/EC; Regulation (EU) 2019/2024 - Ecodesign direct sales refrigerators** ISO 23953-2:2015 **Restriction of Hazardous Substances Directive (RoHS) 2015/863 amending Annex II to Directive 2011/65/EU** **Restriction of the Use of Certain Hazardous Substances in Electrical and Electronic Equipment Regulations 2012 (S.I. 2012/3032)**	**Electrical Safety** IEC 60335-1:2010 +A1:2013 +A2:2016 IEC 60335-2-89:2010 +A1:2012 +A2:2015 EN 62233:2008 **Electromagnetic Compatibility** EN 55014-1:2017 EN 55014-2:2015 EN 61000-3-2:2014 EN 61000-3-3:2013
Producer Name • Naam fabrikant • Nom du producteur • Name des Herstellers • Nome del produttore • Nombre del fabricante		**Polar**

I, the undersigned, hereby declare that the equipment specified above conforms to the above Territory Legislation, Directive(s) and Standard(s).
Ik, de ondergetekende, verklaar hierbij dat de hierboven gespecificeerde uitrusting goedgekeurd is volgens de bovenstaande Richtlijn(en) en Standaard(en).
Je soussigné, confirme la conformité de l'équipement cité dans la présente à la / aux Directive(s) et Norme(s) ci-dessus
Ich, der/die Unterzeichnende, erkläre hiermit, dass das oben angegebene Gerät der/den oben angeführten Richtlinie(n) und Norm(en) entspricht.
Il sottoscritto dichiara che l'apparecchiatura di sopra specificata è conforme alle Direttive e agli Standard sopra riportati.
El abajo firmante declara por la presente que el equipo arriba especificado está en conformidad con la(s) directiva(s) y estándar(es) arriba mencionadas.

Date • Data • Date • Datum • Data • Fecha • Data	**18th October 2022**		
Signature • Handtekening • Signature • Unterschrift Firma • Firma	DocuSigned by: Ashley Hooper B39382C9FD9C478...	DocuSigned by: Eoghan Donnellan D352874F7FAB460...	DocuSigned by: Brendan Denmeade D052C5837EB7465...
Full Name • Volledige naam • Nom et prénom • Vollständiger Name • Nome completo • Nombre completo	**Ashley Hooper**	**Eoghan Donnellan**	**Brendan Denmeade**
Position • Functie • Fonction • Position • Qualifica • Posición	**Technical & Quality Manager**	**Commercial Manager/ Importer**	**Commercial Manager/ Responsible Supplier**
Producer Address • Adres fabrikant • Adresse du producteur • Anschrift des Herstellers • Indirizzo del produttore • Dirección del fabricante	**Fourth Way, Avonmouth, Bristol, BS11 8TB United Kingdom**	**Unit 9003, Blarney Business Park, Blarney, Co. Cork Ireland**	**15 Bagdally Road, Campbelltown NSW 2560**

PROOF