A PROUD HERITAGE OF EXPERIENCE & QUALITY

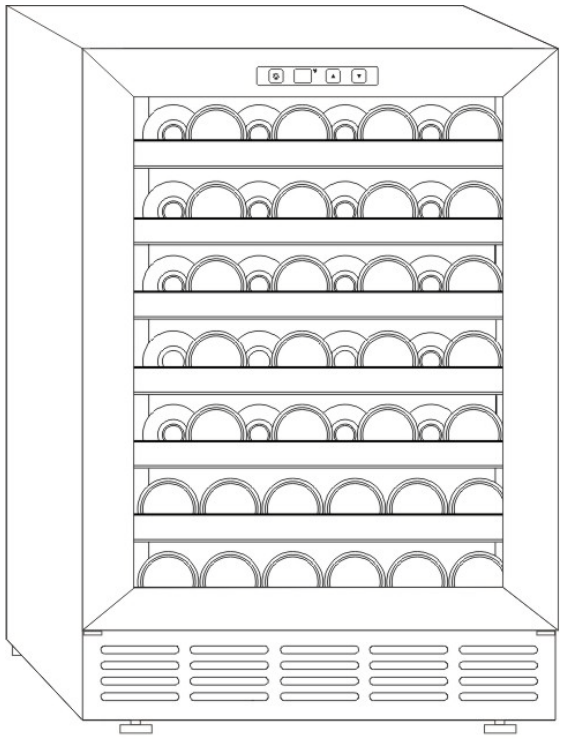

WINE CELLAR

VT-50SBW

Instruction MANUAL

17621 South Susanna Road,
Rancho Dominguez, California 90221
info@vinotemp.com - Fax 310.886.3310
800.777.8466

Your Wine Cellar

This unit can be used for Storage and/or Service. The unit has a glass door and soft interior light that you can leave on to elegantly display your wine.

Serving Wines

Storing wines at the proper temperature is important. To preserve them as long as possible wine should be stored at approximately 55° Fahrenheit. However, the chart below suggests the optimal drinking temperature for the different styles of wine.

°C	°F	Wine Style
19	66	Armagnac, Brandy, Cognac
18	64.5	Full Bodied Red wines, Shiraz
17	62	Tawny Port
15	59	Medium Bodied Red Wines
14	57	Amontillado Sherry
13	55.5	Light Bodied Red Wines
12	53.5	Full Bodied White Wines
11	52	Medium Bodied White Wines
10	50	Rosé, Light Bodied White Wines
9	48	Vintage Sparkling
8	53.5	Fino Sherry
7	44.5	Non Vintage Sparkling

General Operating Instructions:

Remove all packaging and labels from your wine cellar. Be sure that all parts have been included before discarding any packaging materials. You may want to keep the box and packing materials for use at a later date.

Upon receipt of unit and inspection, the supply cord must be replaced if it is damaged. Contact our customer service at 1-800-777-8466.

- Let the unit rest, UNPLUGGED for 24 hours once you have it placed in your home.
- Please fully read the instruction manual.

Please read and follow all safety rules
and operating instructions before using.

To register your product, visit:
http://www.vinotemp.com/Warranty.aspx
Register your warranty within 10 days of receiving the unit.
Please be sure to retain your proof of purchase.

TABLE OF CONTENTS

PARTS AND SPECIFICATIONS..... 5

IMPORTANT SAFETY INSTRUCTIONS..... 6

CORD INSTRUCTIONS..... 7

OPERATING INSTRUCTIONS..... 7

TEMPERATURE CONTROL
Setting the temperature control (presets): 8
Setting the temperature control (manually); 8

WINE RACK REMOVAL / INSTALLATION..... 9

CLEANING AND CARE..... 10

TROUBLESHOOTING 11

LIMITED WARRANTY: 12

SERVICE & IMPORTANT NOTICE 14

Contact 14

PARTS AND SPECIFICATIONS

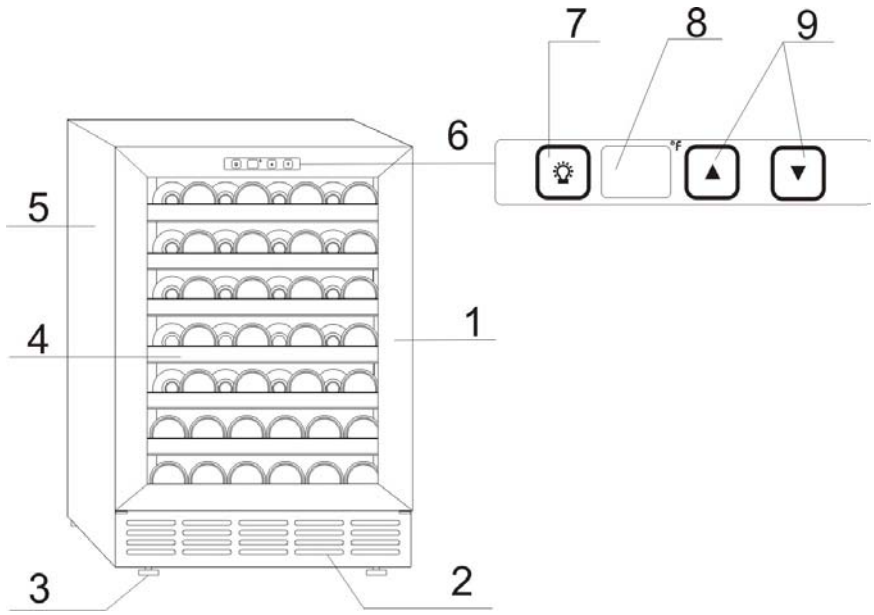

1. Double-pane window
2. Grill
3. Adjustable levelling legs
4. Shelf
5. Cabinet
6. PVC Cover
7. Light Switch
8. LED Indicator
9. Temperature Adjustment

Type	1 Temp
Item Number	VT-50SBW
Bottle Capacity	Approx. 50
Dimension (HxWxD)	34.3”×23.8”×22.7”
Weight	153.9 Lbs
Power Consumption	2.0Kw.h/24h
Cooling System	R134a
Ambient Temp	86.5°F
Temperature Range	45～65°F
Rated Voltage	115V
Rated Frequency	60Hz
Input Power	130W

*Note: This wine cellar is designed to store up to 50 standard Bordeaux 750 ml bottles. Storing large and/or oddly shaped bottles (including champagne and sparkling wine bottles) will decrease the capacity of your wine cellar.

IMPORTANT SAFETY INSTRUCTIONS

When using an electrical appliance, basic precautions should be followed to reduce the risk of fire, electric shock, and personal injury.

1. Use this appliance only as described in this manual. Other users are not recommended, as it may cause fire, electric shock or personal injury.
2. This product is intended for household and commercial use.
3. To protect against electric shock, do not immerse unit, plug or cord in water or other liquids.
4. Keep away from children.
5. Unplug from the outlet when not in use, when moving from one location to another or before cleaning.
6. To disconnect the appliance, grip the plug and pull it from the wall outlet. Never pull by the cord.
7. Do not operate the appliance in the presence of explosive and/or flammable fumes.
8. Do not place the appliance or any of its parts near an open flame, cooking or other heating appliance.
9. Do not operate the appliance with a damaged cord or plug. If the product malfunctions, or if it is dropped or damaged in any manner, do not use.
10. The use of attachments is not recommended and may be hazardous.
11. Place the unit on a dry level surface.
12. Unit is not designed for use in a garage or basement.
13. Do not operate if the housing is removed or damaged.
14. A loose fit between the AC outlet (receptacle) and plug may cause overheating and a distortion of the plug. Contact a qualified electrician to replace loose or worn outlet.
15. This appliance is designed to be built-in (fully recessed) or free standing.
16. The wine cellar is intended for use in a controlled ambient location such that the ambient temperature does not exceed 90°F (32°C) .
17. Locate the unit away from direct sunlight and sources of heat (stove, heater radiator, etc.). Direct sunlight will affect/alter the outside color of the appliance.

WARNING: To reduce the risk of fire, electric shock or personal injury, unplug or disconnect the appliance from the power supply before servicing.

CORD INSTRUCTIONS

For your protection, this unit is equipped with a 3-conductor cord set that has a molded 3-prong grounding-type plug, and should be used in combination with a properly connected grounding-type outlet as shown in figure A.

A

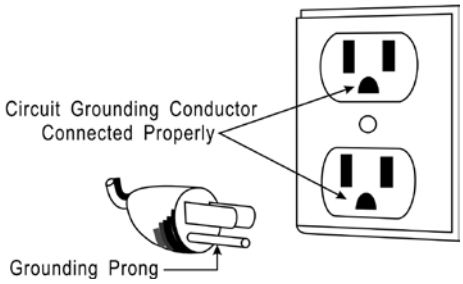

OPERATING INSTRUCTIONS

1. Place your wine cellar on a flat surface that is strong enough to support the unit when fully loaded.
2. This wine cellar is designed to be built-in (fully recessed) or free standing.
3. Do not place heavy objects on top of the unit.
4. Do not place the unit in a moist place or display in direct sunlight.
5. Do not place the unit next to a major appliance that emits large amounts of heat, such as a dishwasher, microwave, toaster oven, oven or barbecue, etc.
6. Do not plug unit into the same outlet as a refrigerator or microwave.
7. The unit's cooling system operates efficiently with an ambient temperature of less than 90°F (32°C). Do not install in a garage or basement.
8. Gently place/slide the racks in the wine cellar.
9. Determine the best setting to use: refer to the temperature guides for appropriate serving (see pages 8). An easy reference guide for serving temperatures is also found on the inside door.
10. Place bottles inside the cooler.
11. Plug the power cord into a standard electrical outlet.

Important: When using the wine cellar for the first time, allow at least 24 hours for the internal temperature to adjust properly, Make sure there are at least 3 to 5 bottles in the unit.

ALWAYS REMOVE ALL BOTTLES BEFORE MOVING THE WINE CELLAR

TEMPERATURE CONTROL

Important note: In order to operate efficiently, thermoelectric products should be in an environment with an ambient temperature of less than 90°F (32°C).

Setting the temperature control (presets):
For your convenience, The Wine cellar is programmed at storing temperature. The temperature pre-set by the manufacturer is 54°F (12°C). The indicator shows the temperature of 54°F (12°C).To change the preset temperature in the wine cellar, simply press the Preset button until the desired number appears. The following sections about storing and serving wines will advise the optimal temperature for your wine.

Setting the temperature control (manually);
You can manually adjust the temperature. Simply press the (-) button on the control panel to decrease the temperature and the (+) button to increase the temperature inside the wine cellar. The temperature range is from 45°F (7°C) to 65°F (18°C).

The electronic control and digital display provide an attractive method to control temperature. The upper zone will be approximately 8-9 °F (4.4-5°C) warmer and the lower zone will be approximately 8-9°F (4.4-5°C) cooler than the middle section. The fluctuation of temperature display is normal, fluctuation range is about -5 ^{o}F~5°F (-2.8^{o}C~2.8^{o}C).

WINE RACK REMOVAL / INSTALLATION

To prevent damaging the door gasket, make sure to have the door all the way opened when pulling shelves out of the rail compartment.

1. Remove any bottles stored on the racks.
2. Pull the racks out flatly and press the button in each side. (See figure 1)
3. Push the racks into sliders. (See figure 2)

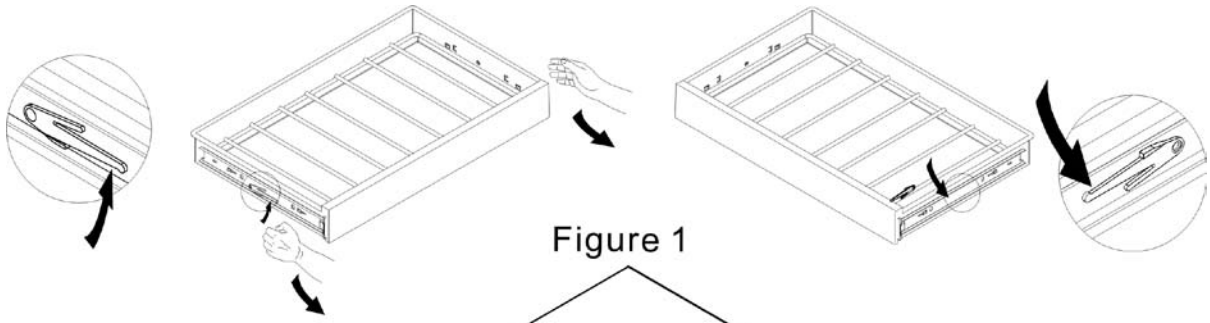

Figure 1

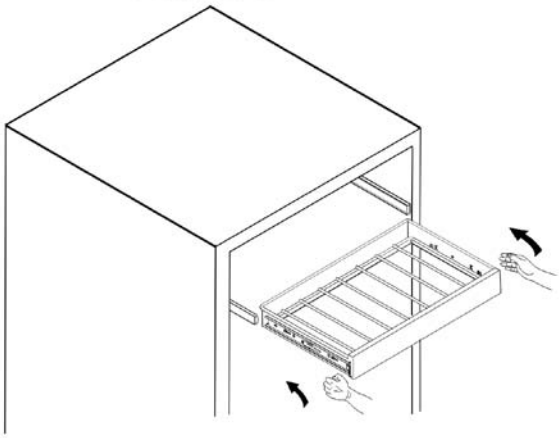

Figure 2

CLEANING AND CARE

- Always unplug the wine cellar before cleaning.
- Do not use benzene, scrubbing brushes or chemical cleaners as these will damage the unit.
- Use only a mild, nonabrasive cleanser to clean the exterior of the cabinet.
- Clean the stainless steel door and handle by wiping with a warm water and baking soda solution. The solution should be about 2 tablespoons of baking soda to a quart of water.
- Wash the racks with a mild detergent solution.
- Always dry all the parts with a clean dry cloth before plugging the wine cellar back into the receptacle.

INACTIVITY

If the unit will be used for a period of less than three weeks, leave the cooler operating. If the period of inactivity is several months, remove all items and turn the unit off. Clean and dry the interior thoroughly. Leave the door open slightly to prevent and possible moisture build-up.

TROUBLESHOOTING

SYMPTOM	POSSIBLE CAUSE
Vibrations	• Check to make sure the wine cellar is on a level surface.
The door will not close properly.	• The wine cellar is not on a level surface. • The racks are out of position. • The bottle is too long.
Fan is always running.	• This is simply a function of the cooling system. The lower the setting, the more the fan will run. If the room is warmer than 90°F(32°C), it will run more. • The unit has been designed to run continuously when operation at the lower temperatures.
Unit has no power.	• Check the wall outlet for power. Make sure the outlet is not controlled by a wall switch.
The inside temperature does not seem correct.	• Make sure the cooling vents are not obstructed. • The room may be too hot. If the ambient temperature is 90°F(32°C) or higher, the unit can have difficulty chilling adequately on the white wine setting. • When using the unit for the first time, it can take up to 24 hours to reach the desired temperature.
The unit does not operate.	• It may not be plugged into the wall socket. • Make sure the wall socket it functional by testing another electrical appliance in the power socket.
Power is ON but the unit will not cool.	• Make sure there are at least 3 to 5 bottles in the unit. Allow at least 24 hours for the internal temperature to adjust. • If the room temperature is above 90°F(32°C), the unit will not get below 51°F(11°C). Humidity does not affect the cooling ability of the unit. • To achieve accurate temperature control, the unit should not be used of operated in any of the following locations: o In a sunny place o In a room with poor air circulation such as a garage near another heat-producing appliance such as a dishwasher, oven or refrigerator. o With an outlet shared with a refrigerator, as the refrigerator will drain power from the wine cellar. o In a cabinet or closet. • Make sure the cooling vents are not obstructed.
Note	• The unit can be manually set using the + and - symbols. • Temperature range is 45°F(7°C) to 65°F(18°C). • The unit uses about as much energy as a 10-watt light bulb.

LIMITED WARRANTY:

Vinotemp International ("Seller") and the person or entity that acquires these goods from Seller ("Purchaser") hereby fully agree to the following terms and conditions of the sale: Shipping fees are the responsibility of the Purchaser whether freight prepaid or freight collect. Seller assumes no responsibility for the goods sold to the Purchaser once the goods have left the Seller's premises, including, but not limited to, late delivery by the moving carrier, or for events caused by any difficulty carrier incurs in attempting to fit the goods into the Purchaser's place of business or residence due to the size of the goods or otherwise. Purchaser assumes all responsibility for delivery, payment of freight, access, measurement, installation, hook-up, wiring, moving and storage of the goods. The transportation of all goods is subject to the terms and conditions which the moving carrier imposes on Purchaser including, but not limited to, additional charges imposed per flight of stairs, and/or additional charges resulting from the carrier's inability to safely and/or adequately use the building elevator to lift the goods to an upper floor. Any claim for damages incurred during shipment by the carrier of the goods are insured and handled directly with the carrier. Any damages due to manufacture defects will be handled directly with Vinotemp International, subject to the limited warranty.

All sales are final, and unless authorized in writing by the Seller, Purchaser may not return the goods, under any circumstance. If Purchaser refuses to accept the goods, under any circumstance, the Purchaser is liable for the return and cost of freight both ways, and if Seller does take back the goods, there will be a restocking charge that is 35% of the purchase price of the goods. Custom Cabinet and Racking are non returnable. Purchaser must notify Seller of non-conforming goods within four days of delivery, after which time all goods are deemed accepted. If an order has been placed and production has started, cancellation of your order will be a 15% charge.

If Purchaser tenders payment with a check that has insufficient funds (NSF), or stops payment on a check or credit card for any reason, Purchaser agrees to pay for all costs associated with the Seller's connection or litigation of such a claim, including without limitation extra damages, court costs and attorneys' fees. Finance charges begin the date of invoice. Collection fees plus NSF fee of 50$ will be added to your invoice, which you agree to promptly pay. Title to the goods does not pass until payment is received in full by Seller and Seller retains a security interest in the goods until they are paid for in full.

LIMITED WARRANTY: Seller warrants that the goods will be free of defects in materials and workmanship as follows: Furniture style (wood) wine units: all cooling unit parts for a period of 5 (five) years; cabinetry and labor (uninstalled) for a period of 12 (twelve) months from date of sale, removal and re-installation of unit is not included in warranted labor. For the metal cabinet wine, beverage, refrigerator and freezer units: parts and labor for cooling system and cabinetry for a period of 12 (twelve) months from date of sale, removal and re-installation of unit is not included in warranted labor. For a scratch and dent or refurbished unit, warranty is 3 months from your dated invoice (parts for function only, not cosmetic). Thermoelectric Units: 90 (ninety) days from the date of sale. (This includes Wine Coolers, Beer Dispensers and Refrigerators). Cigar Humidors and Racking Systems are not warranted. Split Systems and installed products are parts only for 1 year, no labor. There is no warranty on parts purchased separately. Purchaser's exclusive remedy is limited, at Seller's option; to repair or replace defective part[s] with either new or factory reconditioned part[s]. Purchaser is responsible for shipping the unit pre-paid to designated facility and Seller will pay return shipping charges in the continental United States for items repaired under warranty within 12 (twelve) months from date of sale. Since the natural variation in texture, density, grain, color, tone and shade of wood is unavoidable; Seller does not guarantee the texture, color, tone or shade of the wood: nor does seller guarantee the colorfastness of wood or against peeling, chipping, cracking or scratching. Note: Unfinished wood is subject to warping; all wood surfaces must be sealed before placing cellar into service. Improper placement of the unit will void the warranty. This limited warranty does not cover damage due to such things as accident, misuse, abuse, mishandling, neglect, acts of God, fires, earthquakes, floods, high winds, government, war, riot or labor trouble, strikes, lockouts, delay of carrier, unauthorized repair, or any other cause beyond the control of the Seller, whether similar or dissimilar to the foregoing. Seller is not responsible for any damages caused to Seller's property resulting from the good. This limited warranty applies only inside the Continental US. (Alaska, Puerto Rico and Hawaii are not warranted).

With Wine Mate products, if the customer calls and the product is "defective", you must obtain a letter from your qualified refrigeration technician at the customers cost, to verify that the unit was installed properly, with proper ventilation and the unit is truly malfunctioning due to manufacture defect.

Purchaser understands and acknowledges that the goods sold here are wine cellars, cigar humidors, and/or other similar units which house wine or cigars. Purchaser assumes all risk of using these units, including risk of spoilage, humidity variations, temperature variations, leaks, fire, water damage, mold, mildew, dryness and similar and any other perils that might occur.

Seller is not responsible for incidental or consequential damages, and there are no warranties, expressed or implied, which extend beyond the Limited Warranty described above. The implied warranties of merchantability and of fitness for a particular purpose are hereby expressly disclaimed. Some states do not allow the exclusion of incidental or consequential damages, or a waiver of the implied warranties of fitness and/or merchantability, so the above limitations may not apply to you. This warranty gives you specific legal rights and you may also have other rights which vary from state to state.

In the event of any dispute between Seller and Purchaser arising out of or relating to these terms and conditions or to the goods sold generally, Purchaser must first file a written claim with Seller within ten days of the occurrence giving rise to the claim and wait an additional thirty days for a response before initiating any legal action. The sale and all terms are subject to California law. Any legal proceeding arising out of or relating to these terms and conditions or to the goods sold generally shall be brought solely and exclusively in the County of Los Angeles. In no event may Purchaser initiate any legal proceeding more than six months after the occurrence of the event giving rise to the dispute.

The above terms and conditions are the only ones governing this transaction and Seller makes no oral representations of any kind. These Terms and Conditions can only be modified in writing, signed by both Purchaser and Seller. 04/08

SERVICE & IMPORTANT NOTICE

Upon receipt of unit and inspection, the supply cord must be replaced if it is damaged. Contact our customer service at 1-800-777-8466.

The Manufacturer has a policy of continuous improvement on its products and reserves the right to change materials and specifications without notice.

WARNING

Please do not place the unit within reach of children.
For adult use only.

Contact **info@vinotemp.com** with any questions or visit:

www.vinotemp.com