LIEBHERR

Use and Care Manual

Combined fridge-freezer,
freestanding/semi built-in



CS1311 CS1360
110210 7084538 - 01

Contents

1 The appliance at a glance..... 2
1.1 Additional benefits..... 2
1.2 Overview of the appliance and its equipment 3
1.3 Range of appliance use..... 3
1.4 Conformity..... 3
1.5 Installation dimensions 3
1.6 Energy saving..... 4

2 General safety information..... 4

3 Controls and displays..... 4
3.1 Operating and control elements..... 4
3.2 Temperature display..... 5

4 Start-up..... 5
4.1 Reversing the door hinges..... 5
4.2 Side-by-side installation..... 7
4.3 Water connection..... 9
4.4 Installation into a fitted kitchen..... 10
4.5 Anti-tip device..... 10
4.6 Installing the water filter..... 11
4.7 Transporting the appliance..... 12
4.8 Setting up the appliance..... 13
4.9 Disposal of packaging..... 13
4.10 Connecting the appliance..... 14
4.11 Switching on the appliance..... 14

5 Operation..... 14
5.1 Temperature display unit..... 14
5.2 Brightness of the temperature display..... 14
5.3 Child-proof lock..... 15
5.4 Door alarm..... 15
5.5 Temperature alarm..... 15
5.6 Sabbath Mode..... 15
5.7 Fridge compartment..... 16
5.8 Freezer compartment..... 18

6 Maintenance..... 20
6.1 Replacing the water filter..... 20
6.2 Defrosting with NoFrost..... 20
6.3 Cleaning the appliance..... 21
6.4 Cleaning the IceMaker..... 21
6.5 Customer service..... 22
6.6 Appliance Information..... 22

7 Troubleshooting..... 22

8 Putting appliance out of service..... 25
8.1 Vacation Tips..... 25
8.2 Switching off the appliance..... 25
8.3 Decommissioning 25

9 Disposing of the appliance..... 25

10 Liebherr Warranty Plan..... 25

Congratulations on the purchase of your new appliance. With this purchase, you have chosen all the advantages of the latest refrigeration technology, guaranteeing you a high-quality appliance with a long life span and high operating safety.

The equipment of your appliance gives you the highest level of day-to-day ease of operation.

Together we are making an active contribution to the conservation of our environment by purchasing this appliance which is manufactured in an environmentally friendly process with the use of recyclable materials.

We hope you enjoy your new appliance.

The manufacturer is constantly working to improve all models. Therefore please understand that we reserve the right to make design, equipment and technical modifications.

To get to know all the benefits of your new appliance, please read the information contained in these instructions carefully.

The instructions apply to several models, so there may be differences. Sections which only apply to certain appliances are indicated with an asterisk (*).

Instructions for action are marked with a ▶, the results of action are marked with a ▷.

1 The appliance at a glance

1.1 Additional benefits

- CFC free
- Energy-optimized refrigerant circuit
- Energy-efficient insulation
- Low energy consumption
- User-friendly electronic controls
- Active function indicators
- Temperature can be controlled in the appliance independent of ambient conditions according to its climate rating - Temperature can be displayed as °C or °F
- The appliance defrosts automatically - no need to spend time defrosting
- Large refrigeration capacity
- Safety glass storage shelves
- Adjustable door shelves for tall bottles
- Large freezing capacity
- Shelves can be removed to make space for large items.
- Freezer over-temperature alarm
- Quick-freeze feature for fresh food (SuperFrost)
- Frozen food temperature indicator
- Power failure/"frost-control" display
- All freezer drawers suitable for quick-freeze
- Bright LED interior light
- Door ajar alarm
- Handle grips on all extra-large drawers for easy transport
- Integrated transport grips on appliance housing
- Transport castors at back
- Easy to clean
- Door hinges can be reversed

- This unit is certified as Sabbath compliant by the Star-K organization thus allowing the appliance to be used during religious holidays. For more information please visit Star-K on the web at www.star-k.org.

1.2 Overview of the appliance and its equipment

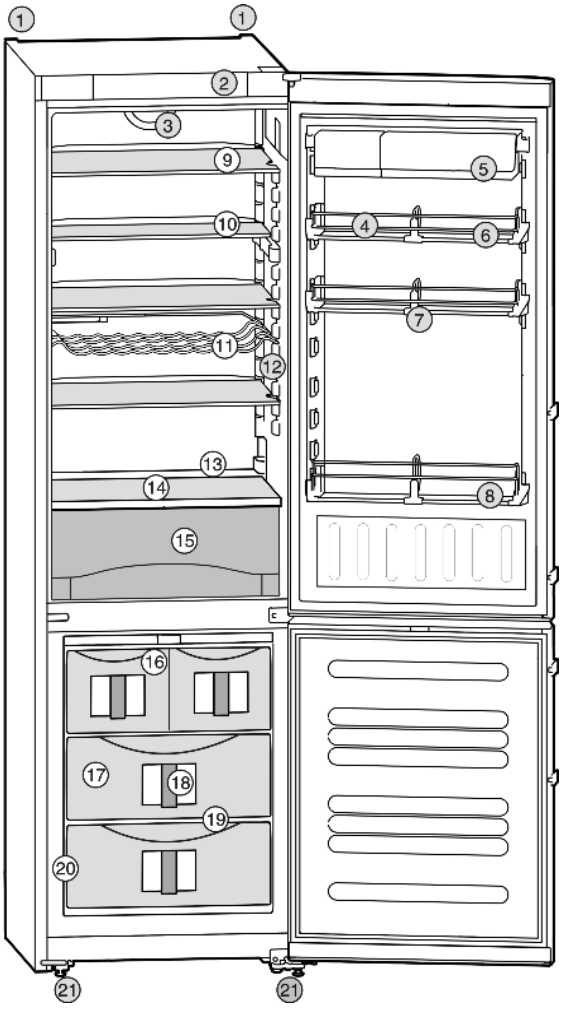

Fig. 1

(1) Rear transport handles
(2) Operating and control elements
(3) Fan
(4) Egg tray
(5) Container shelf
(6) Door rack, moveable
(7) Bottle partition, adjustable
(8) Gallon-capacity rack
(9) Shelf, moveable
(10) Shelf, can be split
(11) Bottle shelf
(12) Interior light
(13) Drain hole
(14) Coldest zone
(15) Vegetable drawer
(16) IceMaker*
(17) Freezer compartment
(18) InfoSystem
(19) VarioSpace
(20) Rating plate
(21) Adustable feet, front transport handles, rear transport castors

1.3 Range of appliance use

The appliance is suited only for cooling food.

In the case of commercial food cooling, the pertinent statutory regulations have to be observed. The appliance is not suited for storing and cooling pharmaceuticals, blood plasma, laboratory preparations or similar substances and products subject to the CMDCAS and FDA 510(k). Any misuse of the appliance may result in damage to or spoilage of the stored goods. Furthermore, the appliance is unsuited for use in areas exposed to an explosion hazard.

The appliance is set to operate within specific ambient temperature limits according to its climate rating. The climate rating for your appliance is printed on the rating plate.

Note

▶ Compliance with the specified ambient temperatures is required, otherwise the refrigeration performance is reduced.

Climate rating	for ambient temperatures from
SN	50 °F (10 °C) to 90 °F (32 °C)
N	61 °F (16 °C) to 90 °F (32 °C)
ST	61 °F (16 °C) to 101 °F (38 °C)
T	61 °F (16 °C) to 110 °F (43 °C)

1.4 Conformity

The refrigerant circuit has been tested for leaks. The appliance complies with the relevant safety regulations and the directives UL250 and CAN/CSA C22.2 No.63-93.

1.5 Installation dimensions

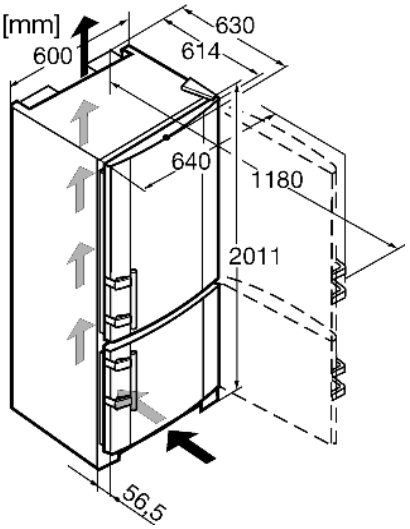

Fig. 2

1.6 Energy saving

- Always ensure good ventilation. Do not obstruct ventilation openings or grilles.
- Do not install the appliance in direct sunlight or next to an oven, heater, or similar heat source.
- Energy consumption depends on installation conditions such as the ambient temperature (see 1.3) .
- Avoid opening the appliance door for any longer then neccesary.
- Store food logically.
- All food stored in the appliance should be well wrapped and covered. This prevents frost buildup.
- Storing hot food: let it cool to room temperature first.
- Defrost frozen food in the fridge.

Dust deposits increase energy consumption:

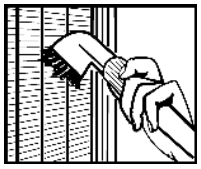

- Once a year the dust should be removed from the refrigerating machine and the heat exchanger metal grid at the back of the appliance.

2 General safety information

Read and follow these instructions. They contain safety advice which is important for safe and problem-free installation and operation. Always read and follow the safety advice.

Dangers for the user:

- This appliance is not designed for persons (or children) with physical, sensory or mental impairment or persons who do not have sufficient experience and knowledge, unless they have been instructed in the use of the appliance by a person who is responsible for their safety and supervised at first. Supervise children so that they do not play with the appliance.
- In the event of power failure, disconnect the power plug (do not pull on the power cord to do this) or switch off the fuse.
- Repairs, work on the appliance and replacement of the power cord should only be carried out by the customer service department.
- When disconnecting the appliance from the outlet, always take hold of the plug. Do not pull on the cable.
- The appliance should only be assembled and connected in accordance with the instructions.
- Please keep the instructions and pass them on to any future owner.
- All repairs to or work on the IceMaker must only be carried out by the customer service department or other specialist engineers trained to do this.*
- The manufacturer is not liable for damage arising from incorrect connection to the water supply.*

Risk of fire:

- Do not operate the appliance near explosive gases.
- Do not store explosive materials or spray cans with flammable propellants, such as e.g. butane, propane, pentane, etc. in the appliance. You can recognize such spray cans by the printed contents or a flame symbol. Any leaking gasses can be ignited by electrical components.
- Do not place burning candles, lamps and other objects with an open flame on the appliance.
- High-proof alcohol should only be stored tightly sealed and standing upright. Any leaking alcohol could be ignited by electrical components.

Tipover hazard:

- Do not stand or climb on the plinth, drawers, doors, etc. This applies in particular to children.

Risk of food poisoning:

- Do not consume food that has passed its best before date.

Danger of frostbite, feelings of numbness and pain:

- Avoid continued skin contact with the cold surfaces or chilled/frozen food or adopt protective measures, e. g. use gloves. Do not consume ice cream (especially sherbets) and ice cubes immediately when they are too cold.

Follow the specific instructions in the other sections:

⚠	DANGER	indicates a hazardous situation, which if not avoided, will result in death or serious injury.
⚠	WARNING	indicates a hazardous situation, which if not avoided, could result in death or serious injury.
⚠	CAUTION	indicates a hazardous situation, which if not avoided, will result in minor or moderate injury.
	NOTICE	indicates a hazardous situation, which if not avoided, could result in damage to property.

	Note	indicates useful advice and tips.

3 Controls and displays

3.1 Operating and control elements

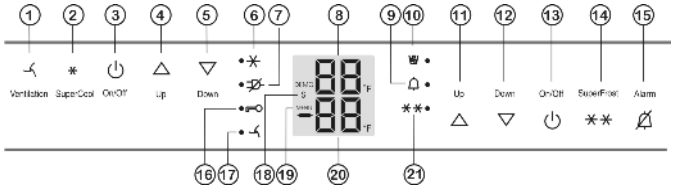

Fig. 3

(1) Ventilation button
(2) SuperCool button
(3) Fridge compartment On/Off button
(4) Fridge compartment Up button
(5) Fridge compartment Down button
(12) Freezer compartment Down button
(13) Freezer compartment On/Off button
(14) SuperFrost button
(15) Alarm button
(16) Child lock symbol

(6) SuperCool symbol
(7) Power failure symbol
(8) Fridge compartment temperature display
(9) Alarm symbol
(10) IceMaker symbol*
(11) Freezer compartment Up button
(17) Ventilation symbol
(18) Sabbath mode symbol
(19) Menu symbol
(20) Freezer compartment temperature display
(21) SuperFrost symbol



The touch point is located between the symbol and the symbol label.

3.2 Temperature display

The following is displayed in normal operation:
- the highest freezer temperature
- the average fridge temperature

The freezer compartment temperature display is flashing:
- the temperature setting has been changed
- after switch-on the temperature is not yet cold enough
- the temperature has risen several degrees

Dashes are shown on the display:
- the freezer temperature is above 32 °F (0 °C).

The following displays indicate malfunction. Possible causes and corrective actions: (see Troubleshooting).
- F0 through F9
- FE*
- The LED of the symbol for power failure lights up.

4 Start-up

4.1 Reversing the door hinges

You can reverse the door hinges, if necessary:
Make sure you have the following tools on hand:
- ❑ Torx 25
- ❑ Torx 15
- ❑ Screwdriver
- ❑ Cordless screwdriver, if necessary
- ❑ Another person to help with the installation, if necessary

4.1.1 Removing the upper door

Note
▶ To prevent food items from falling out, take all food out of the door racks before removing the door.

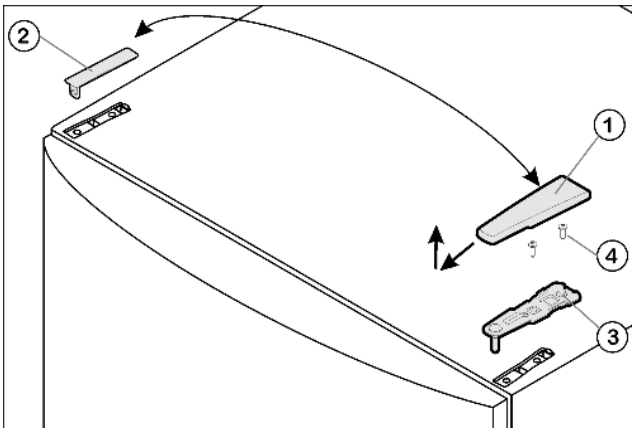

Fig. 4

▶ Close upper door.
▶ Pull the cover *Fig. 4 (1)* forward and up.
▶ Lift the cover *Fig. 4 (2)* off.

CAUTION
Risk of injury if the door tips out!
▶ Keep a steady grip on the door.
▶ Set the door down carefully.

▶ Unscrew the upper bearing bracket *Fig. 4 (3)*(two Torx 25 screws) *Fig. 4 (4)* and pull it upwards to remove.
▶ Lift the upper door off upwards and set it to the side.

4.1.2 Removing the lower door

▶ Close the lower door.
▶ Remove the center bearing pin *Fig. 5 (11)* from the bearing bracket and the lower door.
▶ Remove the plastic cap *Fig. 5 (10)*.

CAUTION
Risk of injury if the door tips out!
▶ Keep a steady grip on the door.
▶ Set the door down carefully.

▶ Open the lower door.
▶ Detach the center bearing bracket *Fig. 5 (13)*.
▶ Lift the door off upwards and set it to the side.

4.1.3 Swapping over central bearing parts

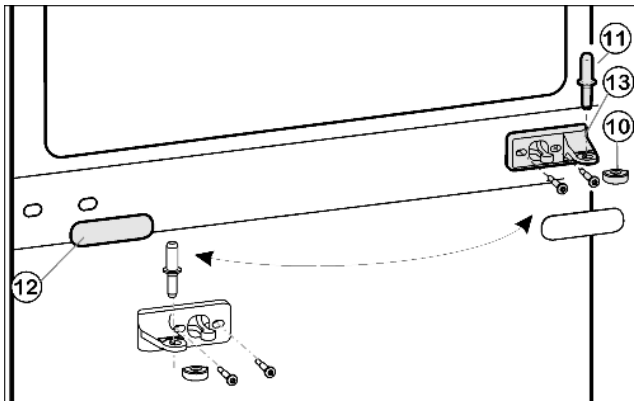

Fig. 5

- ▶ Carefully remove the cover trim *Fig. 5 (12)*.
- ▶ Turn the center bearing bracket *Fig. 5 (13)* 180° and secure **tightly (to 4 Nm)** on the new hinge side.
- ▶ Turn the cover trim *Fig. 5 (12)* 180° and snap it back into place on the new handle side.

4.1.4 Swapping over lower bearing parts

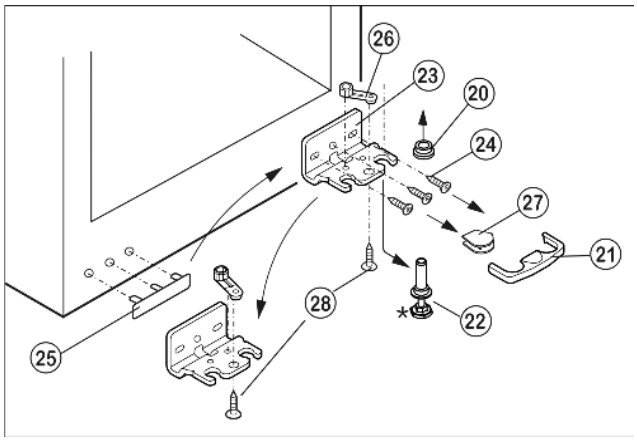

Fig. 6

- ▶ Pull the locking device *Fig. 6 (21)* forward and off.
- ▶ Remove the cover *Fig. 6 (27)*.*
- ▶ Screw in the adjustable foot *Fig. 6 (22)* completely.
- ▶ With the help of another person, if necessary, tilt the appliance backwards slightly to remove the bearing bracket.
- ▶ Pull the bearing bracket *Fig. 6 (22)* downward and forward. Take care with the hinge bush *Fig. 6 (20)* when doing so.
- ▶ Unscrew the bearing bracket *Fig. 6 (23)* abschrauben (three Torx 25 screws) *Fig. 6 (24)*.
- ▶ Unscrew the bearing part *Fig. 6 (26)*(one Torx 25 screw) *Fig. 6 (28)*, swap it over to the opposite positioning hole, then secure it again with a screw.
- ▶ Carefully lift off the cover *Fig. 6 (25)* on the handle side and swap it over.
- ▶ Using a cordless screwdriver if necessary, again secure the bearing bracket *Fig. 6 (23)* on the new hinge side **tightly (to 4 Nm)**.
- ▶ Tilt the appliance slightly backwards again and replace the bearing pin *Fig. 7 (22)*. The notch must face forward.
- ▶ Position the cover *Fig. 6 (27)* on the opposite side.*

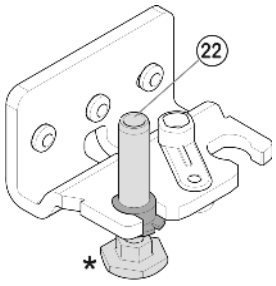

Fig. 7

CAUTION

Risk of injury if the door tips out!

- ▶ The locking device *(21)* must engage on the side of the bearing bracket to ensure that the bearing pin and therefore the door are secure.
- ▶

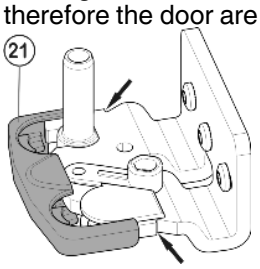

- ▶ Snap the locking device *(21)* back onto the bearing bracket.
- ▶ Place the hinge bush *Fig. 6 (20)* in position.

4.1.5 Swapping the handles

- ▶ Release the spring clip *Fig. 8 (31)* from the upper door and swap it over to the new hinge side.
- ▶ Pull the plugs *Fig. 8 (30)* out of the door bearing bushes and swap them over.

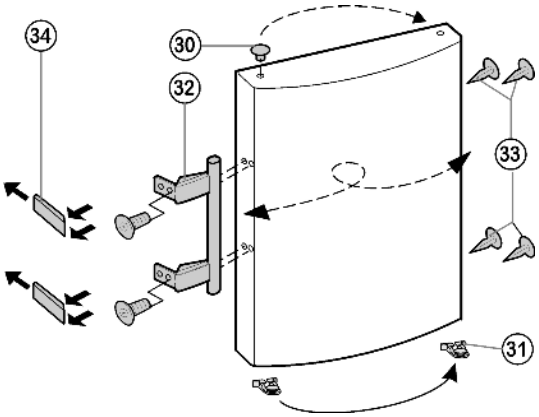

Fig. 8

- ▶ Detach the door handles *Fig. 8 (32)*, plugs *Fig. 8 (33)*, and pressure plates *Fig. 8 (34)* and swap them over to the opposite side.
- ▶ When fitting the pressure plates on the opposite side, make sure they engage correctly.

4.1.6 Fitting the lower door

- ▶ Position the lower door from above onto the bearing pins below *Fig. 6 (22)*.
- ▶ Close the door.

- ▶ Place the plastic cap *Fig. 5 (10)* back onto the center bearing bracket *Fig. 5 (13)*.
- ▶ Insert the center bearing pin *Fig. 5 (11)* on the new hinge side through the center bearing bracket *Fig. 5 (13)* into the lower door.

4.1.7 Fitting the upper door

- ▶ Place the upper door on the center bearing pin *Fig. 5 (11)*.
- ▶ Insert the upper bearing bracket *Fig. 4 (3)* on the new hinge side into the door.
- ▶ Tighten the upper bearing bracket **securely (to 4 Nm)** (2 x Torx 25) *Fig. 4 (4)*. Make preliminary holes (optional) or use a cordless screwdriver.
- ▶ From the outside, position cover *Fig. 4 (1)* and cover *Fig. 4 (2)* on the opposite side and snap into place.

4.1.8 Aligning the doors

- ▶ Align the doors flush with the appliance housing, using the two oblong holes in the lower bearing bracket *Fig. 6 (23)* and in the center bearing bracket *Fig. 5 (13)* as a guide, if needed. To do so, unscrew the center screw on the lower part of the bearing bracket *Fig. 6 (23)*.

WARNING

Risk of bodily injury due to the door falling off.
If the bearing parts are not installed with the proper torque, the door may fall off. In addition, the door may not close, thus impairing the cooling performance of the appliance.

- ▶ Securely tighten the bearing brackets by applying a torque of 3 lb-ft (4 Nm).
- ▶ Check all screws and retighten if necessary.

4.2 Side-by-side installation

As seen from the front, install the appliance with an IceMaker on the right and the appliance without an IceMaker on the left.

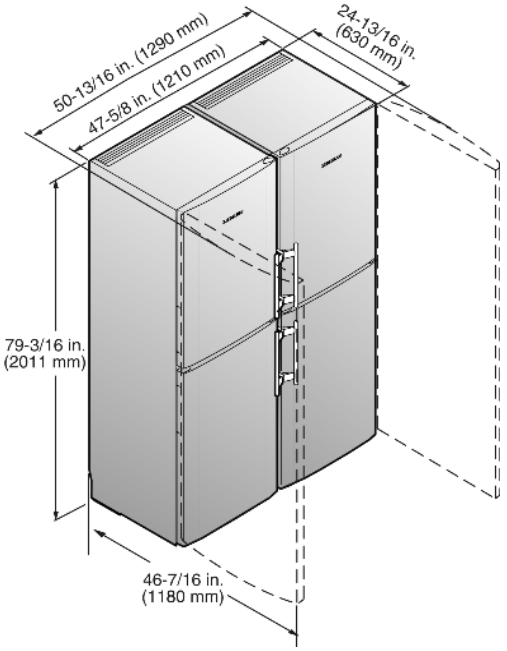

Fig. 9

All fasteners are supplied with the appliance.

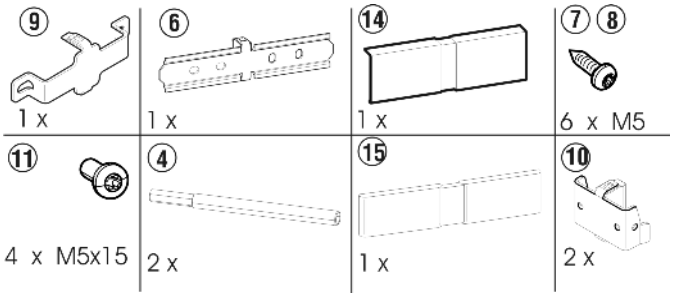

Fig. 10

Make sure you have the following tools on hand:

- ❑ Spirit level
- ❑ Cordless screwdriver
- ❑ Torx 25 screwdriver
- ❑ Open-end wrench, SW 19 and SW 8

- ▶ Remove all protective films from the housing exterior.
- ▶ Completely screw in adjustable foot B* at the front of each appliance.
- ▶ Align each appliance separately with the spirit level.

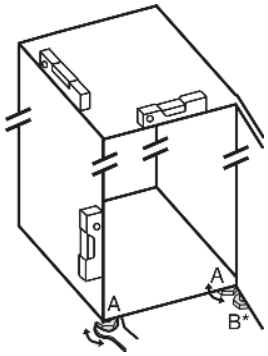

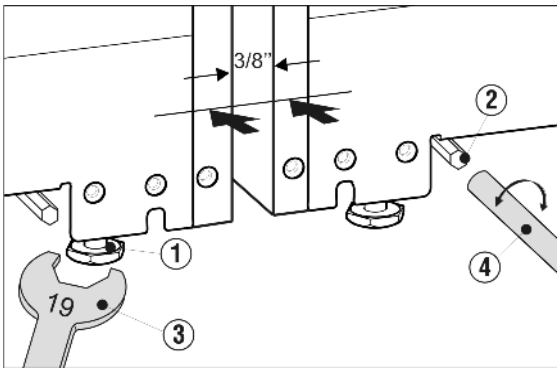

Fig. 11

- Move the two appliances together, leaving a 3/8 " (10 mm) gap between them, so that they are flush as seen from the front.
- Align the appliances using the front adjustable feet *Fig. 11 (1)* (open-end wrench, SW 19 *Fig. 11 (3)*) and the adjustment axes *Fig. 11 (2)* of the rear adjustable feet (adjusting wrench, 1/4" *Fig. 11 (4)*). Use a spirit level to ensure accurate alignment.

Note

- The appliance tops must be aligned to the same height and in the same position. Otherwise, the covers will not sit correctly.
- Do not move the appliance combination again until all mounting brackets are tightly fitted.

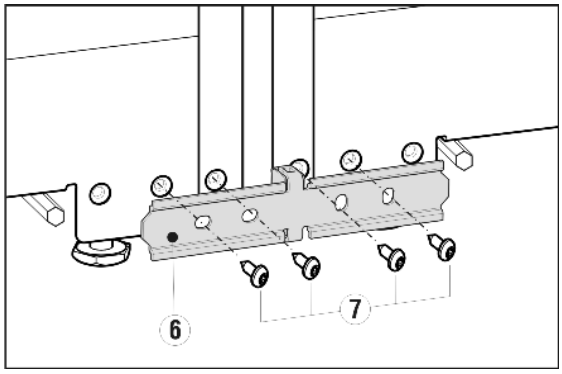

Fig. 12

- Push the appliances together, realign them, and secure the mounting bracket *Fig. 12 (6)* tightly with the supplied screws *Fig. 12 (7)*.

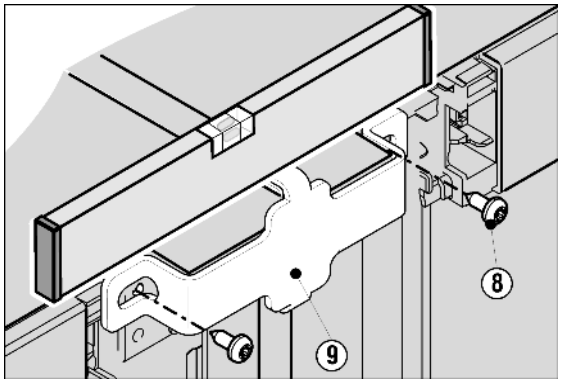

Fig. 13

- Push the appliances together, realign them, and while doing so, screw the large mounting bracket *Fig. 13 (9)* on the top front side of the appliance using the screws *Fig. 13 (8)*. Make preliminary holes (optional) or use a cordless screwdriver.

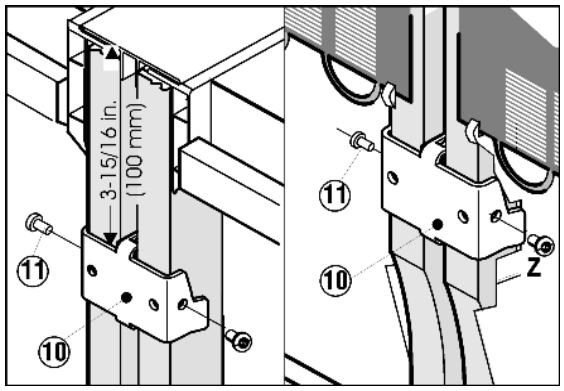

Fig. 14

- On the back, position the wide mounting brackets *Fig. 14 (10)*, one at the top and one at the bottom.
- Slide the upper mounting bracket up to within 100 mm of the upper edge.
- Insert the lower mounting bracket into the appropriate recess (Z).
- Secure the two mounting brackets *Fig. 14 (10)* on the side using hex head screws *Fig. 14 (11)*.

Note

- To prevent vibration noise, the brackets and screws must not be permitted to come into contact with the piping on the back!

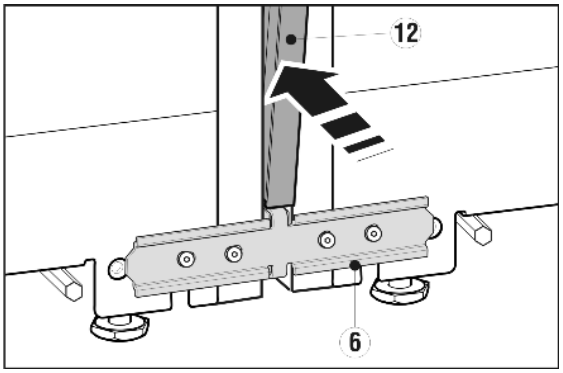

Fig. 15

Prior to insertion, squeeze the two fillets of the trim together *Fig. 15 (12)* along the entire length. The trim can now be inserted more easily into the gap. When pressing in the trim, use a soft cloth to prevent dents on the surface of the trim. Press the trim carefully and evenly into the gap to achieve the best possible fit.

- On the front, press the long trim *Fig. 15 (12)* into the vertical gap. Make sure that the trim rests on the mounting bracket *Fig. 15 (6)*.
- Remove the protective film from the trim.

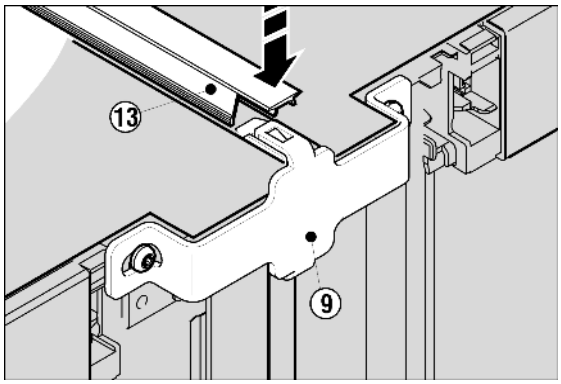

Fig. 16

- On the top, press the short trim *Fig. 16 (13)* into the gap. Make sure that the recess of the cover trim is pointing toward the front of the appliance. The trim must form a flush finish with the top of the appliance at the front edge.
- Connect the combination to the power supply (see 4.10) .

Appliances with IceMaker:

- Connect the appliance to the water supply (see 4.3) .

All appliances:

- Install the anti-tip device (see 4.5) .

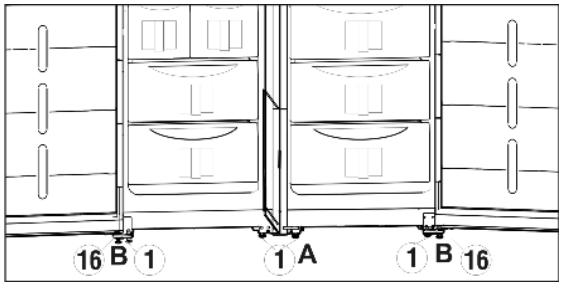

Fig. 17

- Raise the adjustable feet on inner surface A so that the combination is easier to move.
- Carefully push the combination into the designated position.

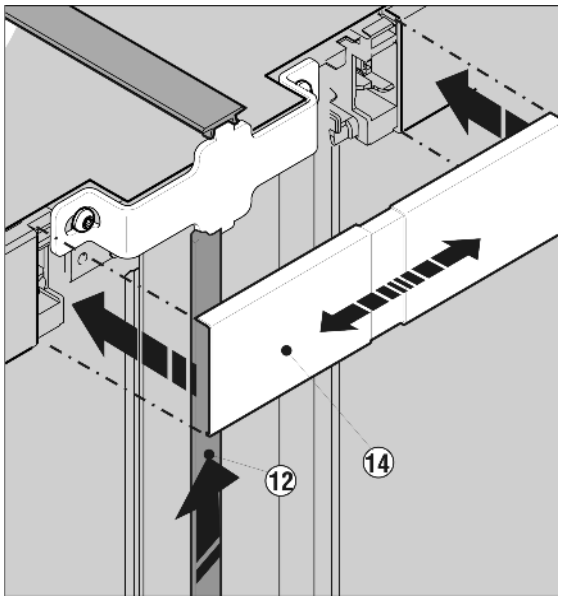

- Snap the cover *Fig. 17 (14)* onto the open space between the two control panel trims. Make sure that the outer surfaces of the cover form a flush finish with the control panel trims. The cover can be extended for this purpose.

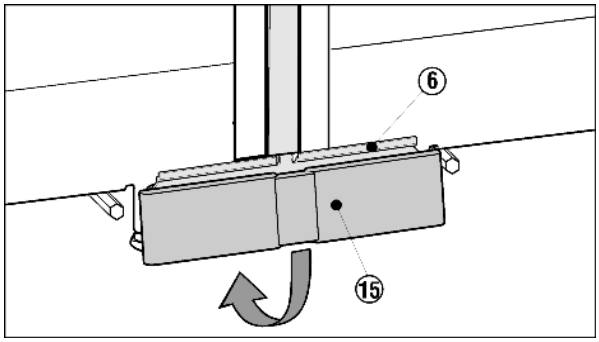

Fig. 18

- Position the lower cover *Fig. 18 (15)* from the accessory kit onto the mounting bracket *Fig. 18 (6)* from above and snap it down into place.
- Using a spirit level, check the combination again in its final mounting position and level it, if necessary.
- Lower the center adjustable feet (A) again until they touch the floor.
- Lower the adjustable feet *Fig. 17 (16)* on the bearing bracket (B) to support the door.

4.3 Water connection

WARNING

Electrical Shock Hazard!

- Do not make the water connection while the appliance is connected to an electrical outlet.
- Disconnect the water supply before connecting the water lines for the IceMaker.
- The connection to the water supply may only be made by a trained and licensed plumber.

WARNING

Poisoning Hazard!

- The water quality must comply with the drinking water regulations for the geographical area where the appliance is located.
- The IceMaker is designed exclusively to make ice cubes in quantities needed by a household and must only be operated with water appropriate for this purpose.

Water pressure:	
psi	**MPa (bars)**
21.76 to 87.02	0.15 to 0.6 (1.5 to 6)

- Water must be supplied to the appliance through a cold water pipe that complies with hygiene standards and can withstand the operating pressure.
- All devices and equipment used to supply water must comply with the regulations in force in the respective country.

- The solenoid valve is located at the bottom of the back of the appliance. It has a metric R3/4 connecting thread.

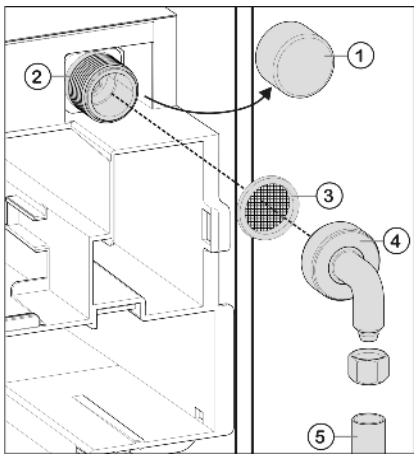

Fig. 19

- ▶ Remove the cap *Fig. 19 (1)* from the solenoid valve *Fig. 19 (2)*.
- ▶ Ensure that the gasket *Fig. 19 (3)* is inserted in the elbow connection *Fig. 19 (4)* supplied.
- ▶ Connect the elbow adapter *Fig. 19 (4)* to the solenoid valve *Fig. 19 (2)* and tighten with an open-ended wrench, for example.

NOTICE
Risk of thread damage!
- ▶ Do not overtighten.

- ▶ Connect the domestic water supply *Fig. 19 (5)* (e.g. copper pipe) to the elbow connector *Fig. 19 (4)*.

Before fitting into the cabinet:
- ▶ Check the whole water system for leaks.

Before using for the first time:
- ▶ Have the water line bled (remove air) by a competent professional.

4.4 Installation into a fitted kitchen

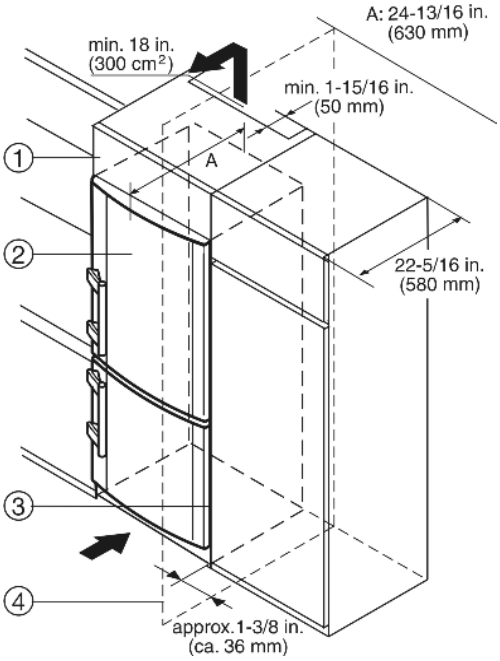

Fig. 20

(1) Top cupboard
(2) Appliance
(3) Kitchen cabinet
(4) Wall

The appliance can be built into the range of kitchen units. To bring the appliance *Fig. 20 (2)* up to the height of the fitted kitchen units, a suitable top cupboard *Fig. 20 (1)* can be added above the appliance.

When installing with standard kitchen cabinets (max. depth. 22-27/32 " (580 mm)) the appliance can be installed right next to the kitchen cabinet *Fig. 20 (3)*. The appliance door projects 1-11/32 " (34 mm) at the side and in the center of the appliance 1-31/32 " (50 mm) from the front of the kitchen cabinet. This allows it to open and close properly.
Important for ventilation:

- There must be a ventilation shaft at least 1-31/32 " (50 mm) deep at the back of the top cupboard over the entire width of the top cupboard.
- The cross section of the ventilation gap below the ceiling must be at least 46.5 in ² (300 cm ²).
- The bigger the ventilation gap, the more energy-saving the operation of the appliance.

If the appliance is installed with the hinges next to a wall *Fig. 20 (4)*, the gap between the appliance and the wall must be at least 1-13/32 " (36 mm). This is how far the handle protrudes when the door is open.

4.5 Anti-tip device

The screws for fastening the anti-tip device are not supplied with the appliance. Appropriate screws must be used for the material (wood, concrete, etc.) in which the safety device is mounted.

WARNING
Risk of injury if the appliance tips over!
- ▶ Install the anti-tip device to prevent the appliance from tipping over when the fully loaded door is open.

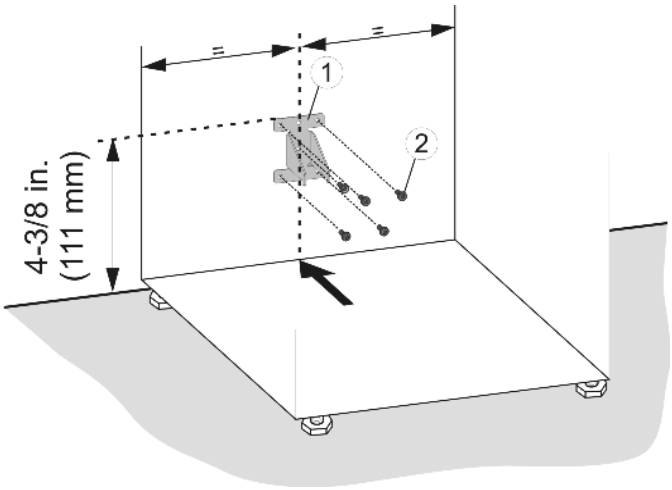

Fig. 21

- ▶ Mark the installation position for the anti-tip device on the wall or back of the unit.
- ▶ Install the anti-tip device *Fig. 21 (1)* using appropriate screws *Fig. 21 (2)*.

4.6 Installing the water filter*

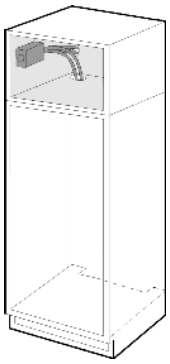

The water filter ensures optimum water quality and is available as an accessory. It should be installed near the appliance in the cabinet, for example in the adapter cabinet above the appliance. To connect the filter to the appliance, it may be necessary to make an opening (**C**) in the floor of the adapter cabinet through which the hoses will be routed. The two hoses of the water filter can run alternatively through the back of the cabinet or through the base depending on the specific installation situation. The maximum length of the water hose is 118-1/8 " (3 m).

Alternatively, the appliance can also be operated without the water filter.

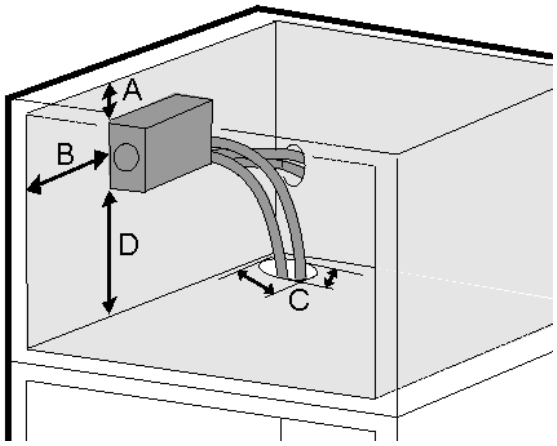

Fig. 22

(A) 13/16 in (20mm)
(B) 3-15/16 in (100mm)
(C) 1-3/16in. x 3/8in. (30mm x 10mm)
(D) min. 4 in (100mm)

The filter cover must be installed during assembly, so leave sufficient space around the filter module. Maintain the dimensions shown in *Fig. 22* so that the filter can be replaced and the cover can be removed.

Flow rate	0.5 gpm (1.89 lpm)
Water connection	Drinking water
Water pressure	40 psi - 90 psi (2.8 bar - 6.2 bar/ 0.28 MPa - 0.62 MPa)
Water temperature	33 °F - 100 °F (0.6 °C - 37 °C)
Capacity	300 gal. (1.14 l)

WARNING
Consuming contaminants can be harmful to your health!
- ▶ If there is a chance the water may contain harmful bacteria or if the water quality is unknown, do not use this system without appropriate disinfection measures upstream or downstream of the system.

NOTICE
Leakage water may damage the system!
- ▶ Do not install this system on hot water lines. The maximum operating temperature of the water in this system is 100 °F (37.7 °C).
- ▶ This system MUST be installed and used in compliance with federal and local installation regulations.
- ▶ Do not install under water hammer conditions. A water hammer arrestor must be used to prevent water hammering. If you are unsure how to check these conditions, consult a professional installer.
- ▶ Do not install with a water pressure greater than 90 psi (6.2 bar). If your water pressure exceeds 80 psi, install a pressure limiting valve. If you are unsure how to check the water pressure, consult a professional installer.
- ▶ Protect against frost; if temperatures below 33 °F (0.6 °C) are expected, remove the filter.
- ▶ When used as indicated, the disposable filter cartridges must be replaced every 6 months or whenever you notice a considerable decrease in the flow rate.

❑ Disconnect the appliance from the mains.
❑ Close off the main water supply if the appliance has already been connected to the tap.
❑ Position appliance in front of the recess.

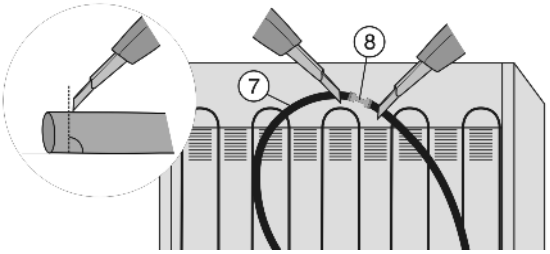

Fig. 23

▶ Slice open the water hose *Fig. 23 (7)* located behind the appliance both in front of and behind the connector *Fig. 23 (8)* (90° to direction of hose).

When doing so, make sure the hose does not become kinked and the cross-section of the hose remains round.

▶ Connect the supplied extension hoses *Fig. 24 (1)* to the appliance hoses *Fig. 24 (7)*: Slide the appliance hoses into the connectors as far as they will go (approx. 25/32 " (20 mm)).

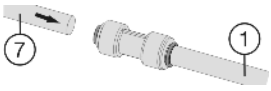

Fig. 24

▶ Pull the tray *Fig. 25 (4)* out until it catches.
▶ Secure the module with 4 screws *Fig. 25 (5)* through the recesses in the front and directly through the module in the back.

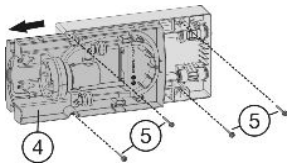

Fig. 25

▶ Shorten hoses if necessary (90° to direction of hose). The hoses should be long enough to allow the appliance to be pulled out of the recess even when it is connected to the water filter.

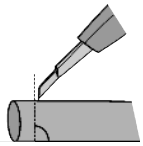

Make sure the hoses do not become kinked and the cross-section of the hose remains round.

▶ On the thin hose measure the insertion depth (E) of 21/32 " (17 mm) and make a mark.
▶ On the thick hose measure the insertion depth (E) of 25/32 " (20 mm) and make a mark.

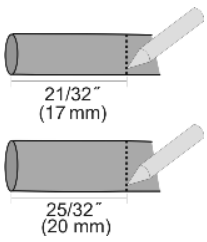

▶ Insert the hoses *Fig. 26 (1)* into the water filter module as far as they will go (i.e. to the mark you made) past the point of resistance.

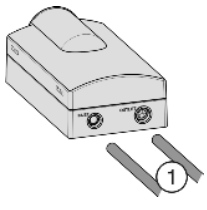

Fig. 26

Note
▶ If you need to disassemble the unit: Push back the dark grey ring on the connector and hold it in this position. While still holding the ring back, briefly push the hose into the connector, then pull it out.

▶ Insert the power cable into the socket (see 4.10) .
▶ Connect appliance to the water supply (see 4.3) .
▶ Make sure the filter is leak-tight and no water is coming out.
▶ Place the tray cover *Fig. 28 (3)* into position.

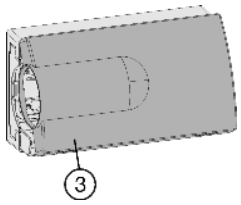

Fig. 27

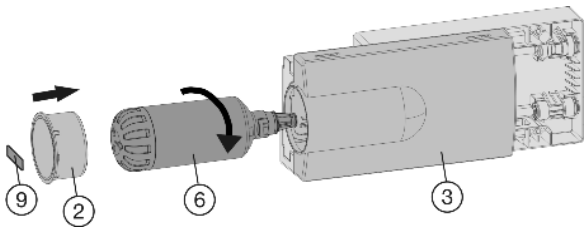

Fig. 28

▶ Remove the film from the water filter *Fig. 28 (6)*.
▶ Insert the water filter *Fig. 28 (6)* and turn it approximately 100° to the right until it locks into position.
▶ Place the cover on the filter *Fig. 28 (2)*.
▶ Slide the tray in.
▶ Write the date of the next filter replacement on the supplied adhesive label *Fig. 28 (9)* and affix it to the module.

Note
New water filters may contain particulate matter and must be rinsed through before use.
▶ To achieve this, do not consume or use the ice cubes that are produced within 72 hours after the filter is replaced.

▷ The water filter is now ready for use.

NOTICE
Risk of damage due to leaking water!
▶ When pushing the appliance into the recess ensure that the water connection does not bend or become damaged.

4.7 Transporting the appliance

CAUTION
Risk of injury or damage if incorrectly transported.
▶ Transport the appliance in its packaging.
▶ Transport the appliance upright.
▶ Do not move the appliance on your own.

4.8 Setting up the appliance

WARNING
Risk of fire due to moisture!
If live parts or the power cord get wet, this can cause a short circuit.
▶ The appliance is designed for use in enclosed spaces. Do not operate the appliance in open space or in damp areas or where there is spray.

WARNING
Danger of fire and damage!
▶ Do not place devices that give off heat, e.g. microwaves, toasters, etc. on the appliance.

CAUTION
Risk of personal injury!
▶ Have two people move this appliance into place.

WARNING
Danger of fire and damage due to blocked ventilation grilles!
▶ Never block the ventilation grilles. Always ensure good ventilation!

NOTICE
Risk of damage caused by condensation
Installing the appliance next to any other refrigerator or freezer can cause condensation or damage to the Liebherr appliance.
▶ Do not install this appliance next to any other refrigerator or freezer except another Liebherr model. Liebherr models are designed to allow side-by-side installation. They are equipped with a heating system to eliminate condensation when refrigerators or freezers are installed side-by-side.

NOTICE
Risk of damage for the finished floor surface!
▶ Protect the finished floor surface before you uncrate the unit.

Verify that:
❑ The floor under the appliance is flat and level.
❑ The floor can support the appliance's weight plus approximately 1200 pounds (544 kg) of food weight.
❑ The appliance is not placed in direct sunlight or near the stove, range top, radiators and similar heat sources.
▶ Examine the unit and packaging for shipping damage. Contact the carrier immediately if you suspect there is any damage.
▶ Note the type (model, number), index, appliance/serial number, date of purchase and where purchased (see 6.6) .
▶ Remove anything attached to the rear or side walls of appliance that would prevent proper installation or impede proper ventilation.

NOTICE
The stainless steel doors are treated with a high-grade surface coating and must not be cleaned with the supplied cleaning agent.
This would damage the surface coating.
▶ Wipe the coated **door surfaces** using a soft, clean cloth only.
▶ Apply a stainless steel cleaner only to the **stainless steel side walls** evenly, wiping with the grain. Subsequent cleaning becomes easier as a result.
▶ Wipe **painted side walls** with a clean, soft cloth only.

When an appliance is fitted together with a second appliance (as a SBS combination):
▶ Proceed according to the Side-by-Side installation instructions (see 4.2) .
▶ Align the appliance so that it stands firmly and on a level by applying the accompanying spanner to the adjustable-height feet (A) and using a spirit level.
▶ Then support the door: Extend the adjustable foot at the turn hinge (B) until it rests on the floor and then make a further 90° turn.

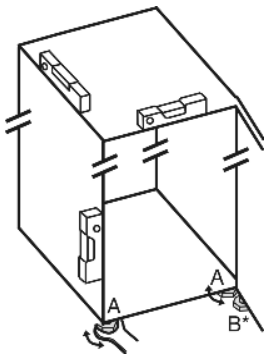

If the appliance is set up in humid areas, condensation may build on the outside of the appliance.
▶ Always ensure proper ventilation.

4.9 Disposal of packaging

WARNING
Danger of suffocation from packaging materials and films!
▶ Do not allow children to play with packaging materials.

The packaging is made from recyclable materials:
- Corrugated card/cardboard
- Preformed pieces from foamed polystyrene
- Films and bags from polyethylene
- Packing bands from polypropylene

▶ Take the packaging material to an official collection point.

4.10 Connecting the appliance

WARNING
Electrical shock hazard!
- ▶ Start-up should only take place once the appliance has been installed according to these instructions.
- ▶ Electrically ground appliance.
- ▶ Do not ground to a gas pipe.
- ▶ Check with a qualified electrician if you are not sure the appliance is properly grounded.
- ▶ Do not have a fuse in the neutral or grounding circuit.
- ▶ Do not use an extension cord, power bar or a multiple socket adapter.
- ▶ Do not use a power cord that is frayed or damaged.

WARNING
Electrical shock hazard!
This appliance is equipped with a three-prong (grounding) polarized plug for your protection against possible shock hazards. Electrical Grounding Required.
- ▶ Do not remove the round grounding prong from the plug.
- ▶ Do not use a two-prong grounding adapter.

- Wait 1 hour after installation before you plug in the appliance. This allows the refrigerant and system lubrication to reach equilibrium.
- Make sure incoming voltage is the same as the appliance rating. A 110-120 Volt, 60 Hz, 15 Amp electrical supply (20 Amp for side-by-side installations) circuit that is controlled by a circuit breaker or fuse is required.
- We recommend using a dedicated circuit for this appliance to prevent electrical overload.
- Follow all Federal, State and local electrical, fire and building codes and ordinances when installing the receptacle and / or the appliance.
- In some communities, a wall switch is required to turn power to the appliance ON and OFF.
- To reduce the risk of fire, electric shock, or personal injury, installation work and electrical wiring must be done by a qualified electrician in accordance with all applicable codes and standards, including fire-rated construction.
- You are advised to clean the appliance before switching it on the first time (see 6.3) .

4.11 Switching on the appliance

Note
- ▶ To switch on the entire appliance, only the freezer compartment needs to be switched on.

Put the appliance into operation about 2 hours before loading with frozen food for the first time.

Do not load frozen foods until the temperature display reads 0 °F (-18 °C).

4.11.1 Switching on the freezer compartment

- ▶ Press On/Off button, freezer compartment *Fig. 3 (13)*.
- ▷ The fridge compartment temperature display shows the current temperature in the interior.
- ▷ The freezer compartment temperature display and the Alarm symbol will flash until the temperature is cold enough. If the temperature is greater than 32 °F (0 °C), flashing dashes will appear; if the temperature is lower than this, the current temperature will flash on the display.

4.11.2 Switching on the fridge compartment

- ▶ Press Fridge compartment On/Off button *Fig. 3 (3)*.
- ▷ The interior light comes on when the door is opened.
- ▷ The temperature display flashes. The fridge compartment is switched on.

5 Operation

5.1 Temperature display unit

The temperature display can be changed from °F to °C.

5.1.1 To change the unit

- ▶ Activate setting mode: Press SuperFrost button *Fig. 3 (14)* for about 5 seconds.
- ▷ The SuperFrost button *Fig. 3 (14)* will flash.
- ▷ 5 is displayed in the temperature display.
- ▶ Using Freezer compartment Up button *Fig. 3 (11)*/ Freezer compartment Down button *Fig. 3 (12)* select °.



- ▶ To confirm: Briefly press SuperFrost button *Fig. 3 (14)*.
- ▶ Using Freezer compartment Up button *Fig. 3 (11)*/ Freezer compartment Down button *Fig. 3 (12)* select °F or °C.



- ▶ To confirm: Briefly press SuperFrost button *Fig. 3 (14)*.
- ▶ To exit setting mode: Press Freezer compartment On/Off button *Fig. 3 (13)*.

-or-
- ▶ Wait 5 minutes.

- ▷ The temperature is again displayed in the temperature display.

5.2 Brightness of the temperature display

You can adapt the brightness of the temperature display to the light conditions in the room in which it is installed.

5.2.1 Setting the brightness

The brightness can be set between h0 (minimum luminosity) and h5 (maximum luminosity).
- ▶ To activate setting mode: Press SuperFrost button *Fig. 3 (14)* for about 5 seconds.

▷ 5 is shown on the display.
▷ The Menu symbol *Fig. 3 (19)* lights up.
▶ Press Freezer compartment Up button *Fig. 3 (11)* or Freezer compartment Down button *Fig. 3 (12)* to select h.
▶ To confirm: Briefly press SuperFrost button *Fig. 3 (14)*.
▶ To set the display brighter: Press Freezer compartment Up button *Fig. 3 (11)*.
▶ To set the display darker: Press Freezer compartment Down button *Fig. 3 (12)*.



▶ To confirm: Press SuperFrost button *Fig. 3 (14)*.
▷ The brightness is set to the new value.
▶ To deactivate setting mode: Press Freezer compartment On/Off button *Fig. 3 (13)*.

-or-

▶ Wait 5 minutes.

▷ The temperature is again displayed in the temperature display.

5.3 Child-proof lock

You can use the child-proof lock to lock the buttons. This means that children cannot accidentally switch off the appliance when playing.

5.3.1 Switching on the child-proof lock

▶ Activate setting mode: press and hold the SuperFrost button *Fig. 3 (14)* for approximately 5 s.
▷ 5 is shown on the display.
▷ The Menu symbol *Fig. 3 (19)* lights up.
▶ Using the Freezer compartment Up button *Fig. 3 (11)* or Freezer compartment Down button *Fig. 3 (12)*, select c.
▶ Press the SuperFrost button *Fig. 3 (14)* briefly to confirm. When c1 is shown on the display:
▶ To switch on the child-proof lock, press the SuperFrost button *Fig. 3 (14)* briefly.



▷ The Child lock symbol *Fig. 3 (16)* LED lights up. c flashes on the display.
When c0 is shown on the display:
▶ To switch off the child-proof lock, press the SuperFrost button *Fig. 3 (14)* briefly.
▷ The Child safety symbol *Fig. 3 (16)* LED goes out. c flashes on the display.
▶ Deactivate setting mode: press the Freezer compartment On/Off button *Fig. 3 (13)*.

-or-

▶ Wait 5 min.

▷ The temperature is again displayed on the temperature display.

5.4 Door alarm

If the door is open for longer than 180 seconds, the acoustic warning sounds.

The acoustic warning stops automatically when the door is closed.

5.4.1 Switching off the door alarm

The acoustic warning can be switched off when the door is open. The acoustic warning remains switched off as long as the door is open. When the door is closed, the alarm function is active again.
▶ Press Alarm button *Fig. 3 (15)*.
▷ The door alarm stops.

5.5 Temperature alarm

If the freezer temperature is not cold enough, the audible warning sounds.

At the same time, the temperature display and the Alarm symbol *Fig. 3 (9)* LED will flash.
The cause of a temperature being too high may be:

- Hot fresh food was placed in the appliance.
- When sorting and removing food from the appliance, too much warm ambient air got in.
- The power was cut off for a while.
- The appliance is faulty.

The audible warning automatically ceases, the Alarm symbol *Fig. 3 (9)* goes out, and the temperature display stops flashing when the temperature is cold enough again.

If the alarm status remains: (see Troubleshooting).

Note
If the temperature is not cold enough, food may spoil.
▶ Check the quality of the food. Do not consume spoiled food.

5.5.1 Switching off the temperature alarm

The acoustic warning can be switched off. When the temperature is cold enough again, the alarm function is active again.
▶ Press Alarm button *Fig. 3 (15)*.
▷ The acoustic warning ceases.

5.6 Sabbath Mode

After entering Sabbath Mode, you do not have to worry about lights, digits, icons, tones, alarms or fans. The defrost cycle operates solely on clock time without any feedback from usage of the refrigerator. After a power failure, the appliance will return to Sabbath Mode without requiring additional input.

WARNING
Danger of food poisoning!
No record will be kept of a power failure during Sabbath Mode. Thus, during Sabbath mode, if a power failure occurs that you are not aware of, when the power comes back on, the unit will continue to be in Sabbath Mode but when Sabbath Mode is ended there will be no indication that a power failure occurred
If a power failure occurs during Sabbath mode:
▶ Check the quality of the food. Do not consume spoiled food!

- No control operations are possible other than switching off Sabbath Mode.
- If the unit is currently running in a mode such as Superfrost, Supercool or the Ventilation is enabled these functions will continue and finish their timed cycles independent of now being in Sabbath mode.
- The Ice Maker is disabled.*
- No audible signals are emitted, and the temperature display does not indicate any warnings or settings (such as a temperature alarm or door alarm).
- Light does not operate.

5.6.1 Setting Sabbath mode

▶ To activate setting mode: Press and hold the SuperFrost button *Fig. 3 (14)* for approx. 5 s.
▷ 5 flashes on the display.
▷ The Menu symbol *Fig. 3 (19)* lights up.
▶ To access the Sabbath mode function: Briefly press theSuperFrost button *Fig. 3 (14)*.
When 51 is shown on the display:



▶ **To turn on** Sabbath mode, briefly press the SuperFrost button *Fig. 3 (14)*.
When 50 is shown on the display:



▶ **To turn off** Sabbath mode, briefly press the SuperFrost button *Fig. 3 (14)*.
▶ To deactivate setting mode: Press the Freezer compartment On/Off button *Fig. 3 (13)*.

-or-

▶ Wait 5 min.

▷ The Sabbath Mode symbol *Fig. 3 (18)* appears on the temperature display as long as Sabbath Mode is active.
▷ Sabbath mode switches off automatically after 120 hours if it is not manually switched off beforehand.

5.7 Fridge compartment

The natural circulation of air in the refrigerator compartment results in zones with differing temperatures. It is coldest directly above the vegetable drawers and at the rear wall. It is warmest at the top front of the compartment and in the door.

5.7.1 Example of food arrangement

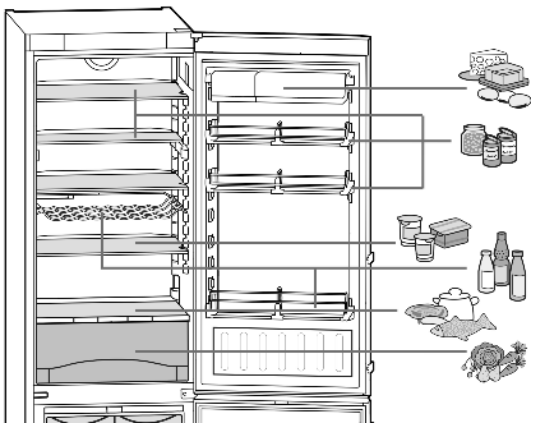

Fig. 29

5.7.2 Refrigerating food

Note
▶ Do not load the door with more than 40 lbs (18 kg) of food.

Note
Insufficient ventilation results in an increase in energy consumption and reduction of the refrigerating performance.
▶ Never block the air slits in the fan.

▶ Use recyclable plastic, metal, aluminum and glass containers and cling film to wrap foods.
▶ Always use closed containers for liquids and for food that may give off or be tainted by odor or flavor transfer or cover them.
▶ Foods which give off a large amount of ethylene gas and those that are sensitive to this gas, such as fruit, vegetables and salad, should always be separated or wrapped so as not to reduce the storage life; for example, do not store tomatoes together with kiwi fruits or cabbage.
▶ Do not store food too close together to enable sufficient air circulation.
▶ To ensure bottles do not tip over: move the bottle holder.

5.7.3 Setting the temperature

The temperature can be set from 35 °F (2 °C) to 45 °F (7 °C), 41 °F (5 °C) is recommended.
▶ To set a higher temperature: press the Fridge compartment Up button *Fig. 3 (4)*.
▶ To set a lower temperature: press the Fridge compartment Down button *Fig. 3 (5)*.
▷ When the button is pressed for the first time, the previously set value is indicated on the fridge compartment temperature display.
▶ To change the temperature in 1 °F (1 °C) increments: briefly press the button.
▶ To change the temperature continuously: hold the button down.
▷ The value is displayed flashing during the setting operation.
▷ The actual temperature is displayed about 5 seconds after the last press of a button. The temperature slowly adjusts to the new value.

5.7.4 SuperCool

With SuperCool you switch to the highest cooling performance to reach lower cooling temperatures. Use SuperCool to rapidly cool large quantities of food.

When SuperCool is activated, the fan runs. The appliance operates with maximum refrigeration. The noise of the refrigeration unit may be temporarily louder as a result.

SuperCool will use more energy than normal operation.

Cooling with SuperCool

▶ Briefly press the SuperCool button *Fig. 3 (2)*.
▷ The SuperCool symbol *Fig. 3 (6)* LED lights up on the display.

▷ The cooling temperature drops to the coldest value. SuperCool is switched on.
▷ SuperCool automatically switches itself off after about 6-12 hours. The appliance returns to work in the energy-saving normal mode.

To prematurely switch off SuperCool

▶ Briefly press the SuperCool button *Fig. 3 (2)*.
▷ The SuperCool symbol *Fig. 3 (6)* LED goes out on the display.
▷ SuperCool is switched off.

5.7.5 Fan

The fan allows you to rapidly cool large amounts of fresh food or to achieve a relatively even distribution of temperature across all the storage levels.
Re-circulated air cooling is advisable:

- at high room temperatures (from approx. 95 °F (35 °C))
- in the case of high humidity

Re-circulated air cooling has a somewhat higher energy consumption. To save energy, the fan automatically switches off when the door is open.

Switching on the fan

▶ Briefly press Ventilation button *Fig. 3 (1)*.
▷ The Ventilation symbol *Fig. 3 (17)* LED lights up.
▷ The fan is switched on.

Switching the fan off (default)

▶ Briefly press Ventilation button *Fig. 3 (1)*.
▷ The Ventilation symbol *Fig. 3 (17)* LED goes out.
▷ The fan is switched off.

5.7.6 Repositioning the shelves

CAUTION
Danger of lacerations!
The storage shelf can shatter if dropped or mishandled. You could cut yourself on the pieces of broken glass.
▶ Only remove storage shelves when there is nothing on them.

Extension stops secure the shelves against being accidentally pulled out.
▶ Lift the shelf and pull out forward.
▶ Insert the short glass plate into the top of the gallon capacity rack so that that door closes properly. It is supported on support bars.

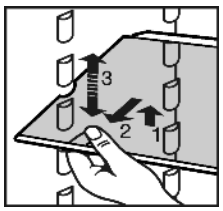

▶ Insert the shelf with the raised edge to the back pointing upwards.
▷ This prevents food from contacting and freezing to the back wall.

The bottle holder offers additional storage for bottles (maximum height 11-13/16 " (300 mm)). It fits onto the same supports as the other racks.

▶ Insert the bottle holder into any position, but not right at the bottom.

5.7.7 Using the split shelf

CAUTION
Danger of lacerations!
The storage shelf can shatter if dropped or mishandled. You could cut yourself on the pieces of broken glass.
▶ Only remove storage shelves when there is nothing on them.

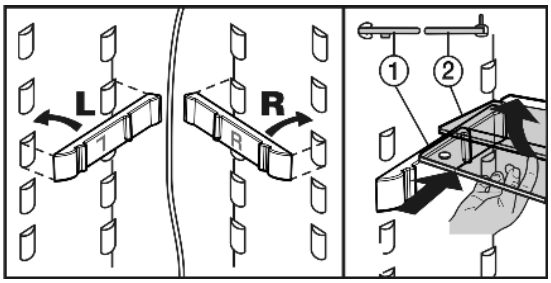

Fig. 30

▶ Attach support bars supplied, ensuring right (R) and left (L) parts are correctly positioned.
▶ The glass shelf with stop face (2) has to be at the back.

5.7.8 Repositioning the door racks

Note
▶ Do not load the door with more than 40 lbs (18 kg) of food.

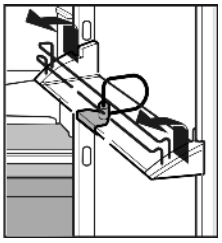

▶ Push rack up, pull forward, and reinsert in the reverse order.

The container trays can be removed and placed on the table as a unit.

One or both containers can be used. If you plan to store very tall bottles, attach only the wide container above the bottle rack.

Instead of one wide container and one small container, a special set containing three small containers is available from Customer Service.

▶ To swap containers: pull up to remove and reinsert in the desired position.

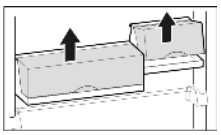

▶ To remove the cover: open 90° and pull up to release.

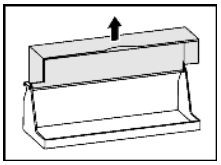

5.7.9 Removing the bottle holder

▶ Always take hold of the bottle holder by the plastic part.

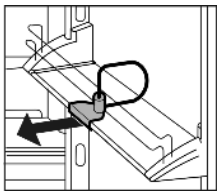

5.7.10 Vegetable drawers

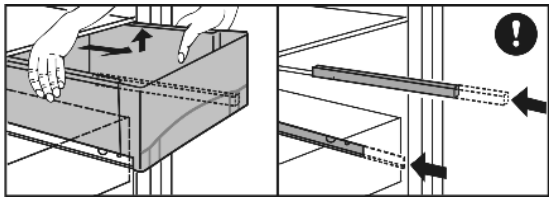

Fig. 31

To remove the vegetable drawers:

▶ Pull the vegetable drawer completely out and tilt it slightly forward.

▶ Push the protruding telescopic rails back in.

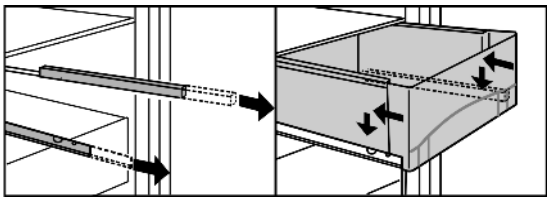

Fig. 32

To insert the vegetable drawers:

▶ Place the vegetable drawer on the telescopic rails and slide it back while applying light pressure.

5.8 Freezer compartment

You can store frozen food, make ice cubes and freeze fresh food in the freezer compartment.

5.8.1 Freezing food

The maximum number of kilograms of fresh food that can be frozen within a 24-hour period is indicated on the rating plate under "Freezing capacity ... kg/24h".

The maximum load for each drawer and the plate is 55.12 lbs (25 kg) of frozen food.

CAUTION

There is a risk of injury from pieces of broken glass.
Bottles and cans containing drinks can split or crack when frozen. This applies in particular to carbonated drinks.

▶ Do not freeze bottles and cans containing drinks.

So that the food is rapidly frozen through to the core, do not exceed the following quantities per pack:

- fruit, vegetables up to 2.2 lb (1 kg)
- meat up to 5.51 lbs (2.5 kg)

▶ Pack the food in portions in freezer bags, reusable plastic, metal or aluminum containers.

5.8.2 Defrosting food

- in the fridge compartment
- at room temperature
- in the microwave
- in the oven/fan oven

WARNING

Danger of food poisoning!

▶ Do not re-freeze defrosted food.

▶ Only take out the amount of food that is required. Use defrosted food as quickly as possible.

5.8.3 Setting the temperature in the freezer compartment

The appliance is set as standard for normal operation.

The temperature can be set between 7 °F (-14 °C) and -16 °F (-26 °C), 0 °F (-18 °C) is recommended.

▶ To set a higher temperature: press the Freezer compartment Up button *Fig. 3 (11)*.

▶ To set a lower temperature: press the Freezer compartment Down button *Fig. 3 (12)*.

▷ When the button is pressed for the first time, the previous value is indicated on the freezer compartment temperature display.

▶ To change the temperature in 1 °F (1 °C) increments: briefly press the button.

-or-

▶ To change the temperature continuously: hold the button down.

▷ The value is displayed flashing during the setting operation.

▷ The actual temperature is displayed about 5 seconds after the last press of a button. The temperature slowly adjusts to the new value.

5.8.4 SuperFrost

The maximum number of kilograms of fresh food that can be frozen within a 24-hour period is indicated on the rating plate under "Freezing capacity ... kg/24h". This maximum amount of frozen food varies according to the model and climate rating.

Freezing with SuperFrost

You do not need to switch SuperFrost on in the following cases:

- when placing frozen food in the freezer
- when freezing up to about 2 kg of fresh food daily

▶ Briefly press the SuperFrost button *Fig. 3 (14)* once.

▷ The SuperFrost symbol *Fig. 3 (21)* LED lights up.

▷ The freezer temperature drops, the appliance works with maximum refrigerating capacity.

When a small amount of food is to be frozen:

▶ Wait for about 6 hours.

▶ Place the fresh food in the top drawers.

When the maximum amount of food is to be frozen:

▶ Wait for about 24 hours.

▶ Place wrapped food directly on the shelves and place in the drawers once frozen.
▷ SuperFrost is automatically switched off. At the earliest after 30 hours, at the latest after 65 hours, depending on the quantity placed inside the appliance.
▷ Freezing is concluded.
▷ The SuperFrost symbol *Fig. 3 (21)* LED goes out.
▷ The appliance returns to work in the energy-saving normal mode.

5.8.5 Drawers

Note
Insufficient ventilation results in an increase in energy consumption and reduction of the refrigerating performance.
For appliances with NoFrost:
▶ Leave the bottom drawer in the appliance.
▶ Never block the air slits in the fan on the rear wall.

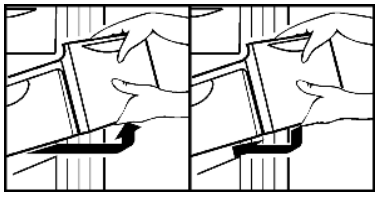

▶ To store frozen food directly on the shelves: pull the drawer forward and lift it out.

5.8.6 Shelves

▶ To remove shelf: lift it at the front and pull out forward.
▶ To reinsert shelf: simply slide it in as far as it will go.

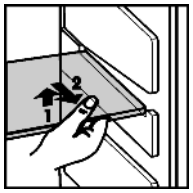

5.8.7 VarioSpace

In addition to the drawers, you can also take out the shelves. This gives you space for large frozen items. Poultry, meat, large joints of game and tall bakery items can be frozen and then presented whole.
▶ The maximum load for each drawer and the plate is 55.12 lbs (25 kg) of frozen food.

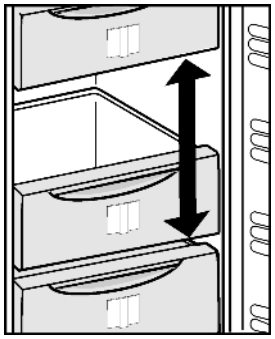

5.8.8 Info system

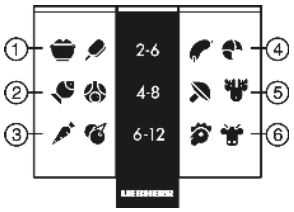

Fig. 33

(1) Ready meals, ice cream
(2) Pork, fish
(3) Fruit, vegetables
(4) Sausages, bread
(5) Game, mushrooms
(6) Poultry, beef/veal

The numbers indicate the storage time in months for different types of frozen foods. The storage times given are guidelines.

5.8.9 IceMaker*

The IceMaker is in the top drawer. The drawer is labeled "IceMaker".
- The freezer compartment is switched on.
- The minimum freezer temperature is 14 °F (-10 °C).
- The IceMaker is connected to the water supply.
- All air was bled from the waterline before starting the icemaker. The icemaker will only work if there is no air in the waterline.

Switching on the IceMaker*

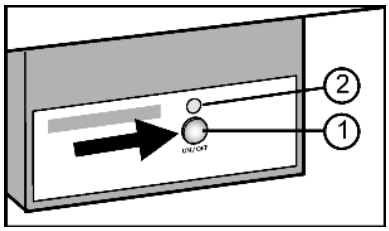

Fig. 34

▶ Pull out the drawer.
▶ Press On/Off button *Fig. 34 (1)* so that the LED *Fig. 34 (2)* lights up.
▶ Push in the drawer.
▷ The IceMaker symbol *Fig. 3 (10)* LED lights up.

Note
▶ The IceMaker only produces ice cubes when the drawer is completely closed.

Producing ice cubes*

The production capacity depends on the freezer temperature. The lower the temperature, the more ice cubes can be produced in a certain period.

The ice cubes fall out of the IceMaker into the drawer. When the ice cubes reach a certain height in the drawer, no more ice cubes can be produced.

If large quantities of ice cubes are required, the complete IceMaker drawer can be swapped with the neighboring drawer. When you close the drawer, the IceMaker automatically restarts production.

When the IceMaker is switched on for the first time, it may take up to 24 hours for the first ice cubes to be produced.

Note
New water filters may contain particulate matter and must be rinsed through before use.
▶ To achieve this, do not consume or use the ice cubes that are produced within 72 hours after the filter is replaced.

Switching off the IceMaker*

If ice cubes are not required, the IceMaker can be switched off independently of the freezer compartment.

When the IceMaker is switched off, the drawer of the IceMaker can also be used for freezing and storing food.
▶ Press the On/Off button for about 1 second until the LED goes out.
▷ The IceMaker symbol *Fig. 3 (10)* LED goes out.
▶ Clean the IceMaker.
▷ This ensures that no water or ice remains in the IceMaker.

Setting the water supply time*

The opening time of the valve on the IceMaker can be adjusted if, for example, the water pressure in the pipe is too low or too high.

The water supply time can be set to levels from E1 (short supply time) to E8 (long supply time).
▶ Activate setting mode: press and hold the SuperFrost button *Fig. 3 (14)* for approximately 5 s.
▷ S is shown on the display.
▷ The Menu symbol *Fig. 3 (19)* lights up.
▶ Using the Freezer compartment Up button *Fig. 3 (11)* or Freezer compartment Down button *Fig. 3 (12)*, select E.
▶ To confirm: briefly press the SuperFrost button *Fig. 3 (14)*.
▶ To increase the water supply time: press the Freezer compartment Up button *Fig. 3 (11)*.
▶ To decrease the water supply time: press the Freezer compartment Down button *Fig. 3 (12)*.



▶ To confirm: press the SuperFrost button *Fig. 3 (14)*.
▶ Deactivate setting mode: press the Freezer compartment On/Off button *Fig. 3 (13)*.

-or-

▶ Wait 2 min.
▷ The temperature is again displayed on the temperature display.

6 Maintenance

6.1 Replacing the water filter*

When used as indicated, the water filter should be replaced at least every 6 months or whenever you notice a considerable decrease in the flow rate.

Your nearest dealer can be located by visiting us online at **www.Liebherr.com**.

The used water filter contains activated carbon and can be disposed of with normal household waste.

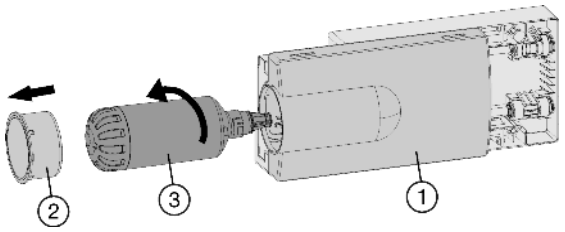

Fig. 35

To remove the old water filter:
▶ Pull out the tray *Fig. 35 (1)*, if necessary.
▶ Remove the filter cover *Fig. 35 (2)*.
▶ Turn the water filter *Fig. 35 (3)* approximately 100° counterclockwise and pull it out.
▶ Catch any dripping water with your hand, towel or with a dish.

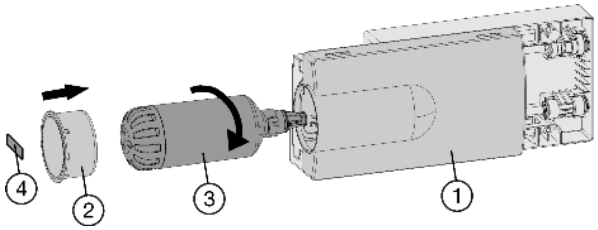

Fig. 36

To install a new water filter:
▶ Insert the water filter *Fig. 36 (3)* and turn it approximately 100° clockwise until it locks into position.
▶ Slide the tray *Fig. 36 (1)* in.
▶ Place the cover *Fig. 36 (2)* on the filter.
▶ Write the date of the next filter replacement on the supplied adhesive label *Fig. 36 (4)* and affix it to the module.

Note
New water filters may contain particulate matter and must be rinsed through before use.
▶ To achieve this, do not consume or use the ice cubes that are produced within 72 hours after the filter is replaced.
▶ Remove any ice still present in the IceMaker tray. You can keep this ice in another tray for later use.

▶ Make sure the filter is leak-tight and no water is coming out.

To reset the timer:
▶ To activate setting mode: Press and hold the SuperFrost button *Fig. 3 (14)* for approx. 5 s.
▷ The SuperFrost button will flash.
▷ S is shown on the display.
▶ Using the Freezer compartment Up button *Fig. 3 (11)* or Freezer compartment Down button *Fig. 3 (12)*, select F.
▶ To confirm: Briefly press the SuperFrost button *Fig. 3 (14)*.
▷ F0 is shown on the display.
▶ To confirm: Briefly press the SuperFrost button *Fig. 3 (14)*.

6.2 Defrosting with NoFrost

The NoFrost system defrosts the appliance automatically.

Fridge compartment:

The defrosted water is evaporated by the heat of the compressor. Drops of water on the back wall are a functional feature and completely normal.

▶ Clean the drain opening regularly so that the defrosted water can flow away (see 6.3) .

Freezer compartment:

The moisture condenses on the evaporator and is periodically defrosted and evaporated.

▶ The appliance does not need to be defrosted manually.

6.3 Cleaning the appliance

Before cleaning:

WARNING

Danger of electric shock.

▶ First, remove the plug or switch off the fuse.

CAUTION

Risk of injury or damage due to hot steam.
Hot steam can damage the surfaces and cause burns.

▶ Do not use steam cleaners.

NOTICE

Incorrect cleaning damages the appliance.

▶ Do not use concentrated cleaning agents.
▶ Do not use steel wool or sponges that scour or scratch.
▶ Do not use cleaning agents containing sand, chloride, chemicals or acids.
▶ Do not use chemical solvents.
▶ Do not damage or remove the rating plate on the inside of the appliance. It is vital for the customer service department.
▶ Do not pull off, kink or damage any cables or other components.
▶ Do not let cleaning water get into the drain gutter, the ventilation grille and electrical parts.

▶ Empty the appliance.



- Use soft cleaning cloths and a multi-purpose cleaning agent with a neutral pH value.
- Only use food-compatible cleaning and care agents inside the appliance.

▶ Clean the ventilation grills regularly.
▷ Dust deposits increase energy consumption.
▶ Clean the plastic surfaces inside and out by hand using lukewarm water and a little dishwashing liquid.

NOTICE

The stainless steel doors are treated with a high-grade surface coating and must not be cleaned with the supplied cleaning agent.



This would damage the surface coating.

▶ Wipe the coated **door surfaces** using a soft, clean cloth only. In case of stubborn dirt, use a little water or a neutral cleaning agent. A microfibre cloth can be optionally used.
▶ If the **stainless steel side walls** are dirty, clean them using a commercially available stainless steel cleaning agent. Then evenly apply the accompanying stainless steel care product, making strokes in the direction of the grain.
▶ Wipe **side walls with a paint finish** using a soft, clean cloth only. In case of stubborn dirt, use a little water or a neutral cleaning agent. A microfibre cloth can be optionally used.

Do not apply stainless steel cleaning agents to glass or plastic surfaces so as not to scratch them. Initially darker areas and quite an intensive color of the stainless steel surfaces are normal.

Stainless steel which is exposed to chlorine gas or dampness may become discolored. This is normal. If your appliance is exposed to chlorine gas or dampness, clean and polish it more frequently. If there are any signs of rust or discoloration, clean and polish the appliance as soon as possible.

▶ To clean the drain opening: remove deposits with a thin instrument, e. g. a cotton bud.

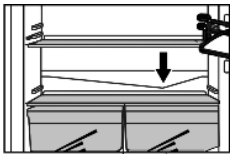

Accessories:

▶ Clean accessories by hand using lukewarm water and a little dishwashing liquid.
▶ To clean, remove the support bars for the half glass plate.
▶ To dismantle shelves: remove trims and side parts.
▶ To dismantle door racks: remove protective films from the trims.

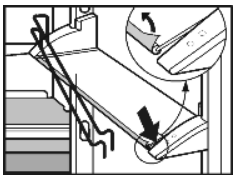

▶ Lift out the boxes and lift the covers to remove them.

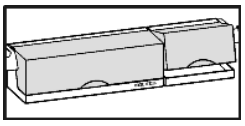

After cleaning:

▶ Wipe the appliance and accessories dry.
▶ Connect the appliance and switch it on again.
▶ Switch on SuperFrost (see 5.8.4) .
When the temperature is sufficiently cold:
▶ put the food back in the appliance.

6.4 Cleaning the IceMaker*

The IceMaker drawer must be emptied and pushed in.

▶ Activate setting mode: press and hold the SuperFrost button *Fig. 3 (14)* for approximately 5 s.
▷ 5 is shown on the display.
▷ The Menu symbol *Fig. 3 (19)* lights up.
▶ Using the Freezer compartment Up button *Fig. 3 (11)*/ Freezer compartment Down button *Fig. 3 (12)*, select 1.
▶ To confirm: press the SuperFrost button *Fig. 3 (14)*.
▶ Using the Freezer compartment Up button *Fig. 3 (11)*/ Freezer compartment Down button *Fig. 3 (12)*, select 1c.



▶ To confirm: press the SuperFrost button *Fig. 3 (14)*.
▷ The IceMaker moves into cleaning position and shuts off.
▶ Deactivate setting mode: press the Freezer compartment On/Off button *Fig. 3 (13)*.

-or-

▶ Wait 2 min.
▷ The temperature is again displayed on the temperature display.
▶ Take out the drawer.
▶ Clean the ice compartment and drawer with warm water. If necessary, use a mild dishwashing liquid. Then rinse.
▶ Slide the drawer back in.
If dishwashing liquid was used:
▶ Throw out the first three batches of ice cubes to get rid of any dishwashing liquid residues.

Either leave the IceMaker switched off in this position or switch the IceMaker back on (see 5.8.9) .

6.5 Customer service

First check whether you can remedy the fault yourself (see Troubleshooting). If this is not the case, please contact the Customer Service department. You can find the address in the enclosed customer service list.

WARNING
Risk of injury from repairs by non-professionals.
▶ Repairs and work on the appliance and the power cord, which are not expressly named (see Maintenance) should only be carried out by the customer service department.

▶ Read the appliance designation *Fig. 37 (1)*, service no. *Fig. 37 (2)* and serial no. *Fig. 37 (3)* from the rating plate. The rating plate is located inside the appliance on the left-hand side.

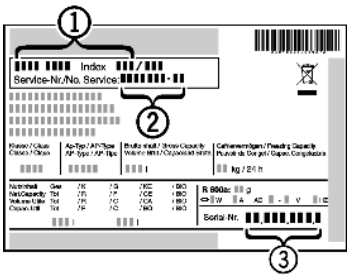

Fig. 37

▶ Notify the Customer Service department, specifying the fault, appliance designation *Fig. 37 (1)*, service no. *Fig. 37 (2)* and serial *Fig. 37 (3)* no.
▷ This will help us to provide you with a faster and more accurate service.
▶ Keep the appliance closed until the Customer Service engineer arrives.
▷ The food will stay cool longer.
▶ Disconnect the power plug (do not pull on the power cord to do this) or switch off the fuse.

6.6 Appliance Information

Make a note of this information when the appliance is installed:

Type Designation: _____
Service Number: _____
Appliance / Serial Number: _____
Date of purchase: _____
Where purchased: _____

7 Troubleshooting

Your appliance is designed and manufactured for reliable operation and a long lifespan. If a malfunction nonetheless occurs during operation, please determine if the malfunction is due to an operating error. If a service call determines operator error, you will be charged for the costs incurred, even during the warranty period. You may be able to rectify the following problems yourself:

Problem	Possible Cause	Correction
The appliance does not work.	The appliance is not switched on.	▶ Switch on the appliance.
	The power plug is not properly inserted in the wall socket.	▶ Check the power plug.
	The fuse in the wall socket is not OK.	▶ Check the fuse.
	Power failure	▶ Keep the appliance closed. ▶ Protect the food: place dry ice on top of the food or use a use an alternate freezer, if the power failure persists for some time. ▶ Do not re-freeze defrosted food.

Problem	Possible Cause	Correction
The compressor runs for a long time.	When less refrigeration is required, the speed-controlled compressor switches to a low speed. Although the running time is increased as a result, energy is saved.	▶ This is normal in energy-saving models.
	SuperFrost function is activated.	▶ The compressor runs long to rapidly freeze food. This is normal.
	SuperCool function is activated.	▶ The compressor runs long to rapidly cool food. This is normal.
Noises are too loud.	The different speed levels of speed-controlled* compressors can cause them to generate various noises during operation.	▶ These noises are normal.
A gurgling sound	This sound comes from the refrigerant flowing in the refrigeration circuit.	▶ The sound is normal.
A faint clicking sound	The sound always occurs when the refrigeration unit (the motor) automatically switches on or off.	▶ The sound is normal.
A hum. It is briefly a little louder when the refrigeration unit (the motor) switches on.	The refrigeration increases automatically when the SuperFrost function is activated, fresh food has just been placed in the appliance or the door has been left open for a while.	▶ The sound is normal.
	The refrigeration increases automatically when the SuperCool function is activated, fresh food has just been placed in the appliance or the door has been left open for a while.	▶ The sound is normal.
	The ambient temperature is too high.	▶ Solution: (see 1.3)
A low hum	The sound occurs as a result of fan air flow.	▶ The sound is normal.
Vibration noise	The appliance is not standing firmly on the floor. As a result, adjoining units or objects are set into vibration by the running refrigeration unit.	▶ Move the appliance away a little and align it using the adjustable feet. ▶ Move bottles and containers apart.
The temperature display indicates: F0 **to** F9**.**	There is a fault.	▶ Contact the customer service department. (see Maintenance).
The temperature display reads: FE*	There is a fault.	▶ Contact the customer service department. (see Maintenance).
The temperature display indicates power failure ☼**. The**	The freezer temperature rose too high during the last hours or days due to power failure or power interruption. When the power interruption is over,	▶ To delete the display of the warmest temperature: Press the Alarm button *Fig. 3 (15)*. ▶ Check the quality of the food. Do not consume spoiled food. Do not re-freeze defrosted food.

Problem	Possible Cause	Correction
warmest temperature reached during the power failure is displayed in the temperature display.	the appliance will continue to operate at the last temperature setting.	
DEMO lights up in the temperature display.	The demo mode is activated.	▶ Contact the customer service department. (see Maintenance).
The outside surfaces of the appliance are warm.*	The heat of the refrigerant circuit is used to prevent condensate from forming.	▶ This is normal.
The IceMaker cannot be switched on.*	The appliance and therefore the IceMaker are not connected.	▶ Connect the appliance (see Start-up).
The IceMaker is not making ice cubes.*	The IceMaker is not switched on.	▶ Switch the IceMaker on.
	The drawer of the IceMaker is not properly closed.	▶ Close the drawer properly.
	The water connection is not open.	▶ Open the water connection.
	The waterline was not bled of all air during installation	▶ Please contact your qualified installation plumber to ensure the above criteria is met before calling for service.
The temperature is not cold enough.	The door of the appliance is not closed properly.	▶ Close the appliance door.
	Insufficient ventilation.	▶ Clear ventilation grilles.
	The ambient temperature is too high.	▶ Solution: (see 1.3)
	The appliance was opened too frequently or for too long.	▶ Wait to see whether the required temperature resets itself by itself. If not, contact the customer service department. (see Maintenance).
	Too much fresh food was placed inside without SuperFrost.	▶ Solution: (see 5.8.4)
	The temperature is incorrectly set.	▶ Set to a colder temperature and check after 24 hours.
	The appliance is too near to a heat source.	▶ Solution: (see Start-up).
Display show two dashes ("--").	The freezer temperature display will only show temperatures that are below freezing.	▶ When initially starting the appliance it will not be below freezing. It will take three to five hours (depending on ambient conditions) for freezing temperatures to be achieved and thus displayed numerically.
	The freezer temperature has risen above zero degrees due to a power failure or power interruption.	▶ See also “Power failure” and “”
	The appliance is not switched on.	▶ Switch on the appliance.

Problem	Possible Cause	Correction
The interior light is not on.	The door was open for longer than 15 minutes.	▶ The interior light automatically switches itself off if the door has been open for about 15 minutes.
	The LED light is faulty or the cover is damaged:	**WARNING** Risk of injury from electrical shock. Live parts are under the cover. ▶ The LED interior light should only be replaced or repaired by the Customer Service department or by engineers trained to do so. **WARNING** Risk of injury from class 1M laser radiation. ▶ Do not look inside when the cover is open.

8 Putting appliance out of service

8.1 Vacation Tips

Short vacations: If you will be away for less than four weeks
- ▶ Use all perishables.
- ▶ Freeze other items.
- ▶ Turn off the refrigerator compartment.
- ▶ Turn off the icemaker.*
- ▶ Shut down the water supply to the icemaker.*

Long vacations: If you will be away for a month or more
- ▶ Remove all food from the appliance.
- ▶ Turn OFF the appliance.
- ▶ Clean the appliance (see 6.3) .
- ▶ Leave the door open to prevent unpleasant odors.
- ▷ This will also keep mold from building up.
- ▶ Turn off the icemaker.*
- ▶ Shut off the water supply to the icemaker.*

8.2 Switching off the appliance

Note
- ▶ To switch off the entire appliance, only the freezer compartment needs to be switched off.

8.2.1 Switching off the freezer compartment

- ▶ Press Freezer compartment On/Off button *Fig. 3 (13)* for about 2 seconds.
- ▷ The temperature displays are dark. The appliance is switched off.

8.2.2 Switching off the fridge compartment

- ▶ Press Fridge compartment On/Off button *Fig. 3 (3)* for about 2 seconds.
- ▷ The fridge compartment temperature display *Fig. 3 (8)* is dark. The fridge compartment is switched off.

8.3 Decommissioning

- ▶ Empty the appliance.
- ▶ Put the IceMaker in the cleaning position (see Maintenance).*
- ▶ Disconnect the power plug.
- ▶ Clean the appliance (see 6.3) .



- ▶ Leave the door open to prevent bad smells.

9 Disposing of the appliance

Follow the local regulations for the disposal of appliances. Old appliances can be dangerous. Contact the local refuse collection department for additional information.

DANGER
There is a risk of suffocation.
Children playing can shut themselves in and suffocate.
- ▶ Take the door(s) off.
- ▶ Remove the drawers.
- ▶ Leave the storage shelves in the appliance so that children cannot easily climb into the appliance.

WARNING
Danger of electric shock.
- ▶ Cut off the plug from the power cord and discard.
- ▶ Cut off the power cord from the discarded appliance. Dispose of separately from the appliance.

10 Liebherr Warranty Plan

FULL TWO YEAR WARRANTY - For two years from the date of original purchase, your Liebherr warranty covers all

parts and labor to repair or replace any part of the product which proves to be defective in materials or workmanship.

FULL FIVE YEAR WARRANTY - For five years from the date of original purchase, your Liebherr warranty covers all parts and labor to repair or replace any components that prove to be defective in materials or workmanship in the sealed system. The “Sealed System” means only the compressor, condenser, evaporator, drier and all connecting tubing.

LIMITED 6TH THROUGH 12TH YEAR WARRANTY - From the 6th through 12th year from the date of original purchase, your Liebherr warranty covers all parts that prove to be defective in materials or workmanship in the Sealed System (parts only).

TERMS APPLICABLE TO EACH WARRANTY

All service provided by Liebherr under the warranty must be performed by authorized Liebherr service representatives, unless otherwise specified by Liebherr. Service will be provided in the home during normal business hours. This warranty applies only to products installed for normal residential use. Details regarding a non-residential warranty are available on request.

The warranty applies only to products installed in any one of the fifty states of the United States or the District of Columbia. The warranty does not cover any parts or labor to correct any defect caused by negligence, accident or improper use, maintenance, installation, service or repair, including but not limited to improper removal and reinstallation of the condensing unit.

The remedies described above for each warranty are the only ones which Liebherr will provide, either under these warranties or under any warranty arising by operation of law. Liebherr will not be responsible for any consequential or incidental damages arising from the breach of these warranties or any other warranties, whether express, implied or statutory.

Some states do not allow the exclusion or limitation of incidental or consequential damages so the above limitation or exclusion may not apply to you. This warranty gives you specific legal rights and you may also have other legal rights which very from state to state.

To receive parts and/or service and the name of the Liebherr authorized service representative nearest you, contact your Liebherr dealer or distributor or contact the Liebherr designated national service provider:

in the US: Liebherr@adcoservice.com or call 1- 866 - LIEBHERR (1- 866 - 543-2437).

in Canada: www.euro-parts.ca or call 1-888-LIEBHERR (1-888-543-2437).