# USER GUIDE & SERVICE MANUAL




Model: UHDR124-IS61A

# USER GUIDE & SERVICE MANUAL

**Click on any section below to jump directly there**

## Table of Contents


Intro

Safety

- Safety and Warning
- Disposal And Recycling

Installation

- Environmental Requirements
- Electrical
- Cutout & Product Dimensions
- Side by Side Installation
- Anti-Tip Bracket
- General Installation
- Integrated Panel Dimensions
- Integrated Panel Installation
- Grille Installation
- Drawers

Maintenance

- Free Standing Kit
- Cleaning
- Cleaning Condenser
- Extended Non-Use

Operating Instructions

- First Use
- Control Operation
- Airflow and Product Loading

Service

- Troubleshooting
- Wire Diagram
- Product Liability
- Parts
- R600a Specifications
- System Diagnosis Guide
- Compressor Specifications
- Troubleshooting Extended
- Control Operation - Service
- Thermistor
- Defrost
- Remove Fan and Cover
- Warranty

## WELCOME TO U-LINE

Congratulations on your U-Line purchase! Our products are focused on functionality, style, and inspired innovations — paying close attention to even the smallest details. Applications include residential, outdoor, ADA height compliant, marine, and commercial. Product categories include Beverage Centers, Wine Refrigerators, Ice Machines, Refrigerators, Freezers, and Dispensers. Our advanced refrigeration systems, large and flexible capacities, and clean integrated look are what makes our products Built-In to Stand Out®. Since 2014, U-Line has been part of the Middleby family of brands.

## U-Line — RIGHT PRODUCT. RIGHT PLACE. RIGHT TEMPERATURE.®

## PRODUCT INFORMATION

Looking for additional information on your product? User Guides, Spec Sheets, CAD Drawings, and Product Warranty information are available digitally on u-line.com.

## PROPERTY DAMAGE / INJURY CONCERNS

In the unlikely event property damage or personal injury is suspected related to a U-Line product, please take the following steps:

1. U-Line Customer Care must be contacted immediately at +1.414.354.0300.
2. Service or repairs performed on the unit without prior written approval from U-Line is not permitted. If the unit has been altered or repaired in the field without prior written approval from U-Line, claims will not be eligible.

## GENERAL INQUIRIES

U-Line Corporation
8900 N. 55th Street
Milwaukee, Wisconsin 53223 USA
Monday - Friday 8:00 am to 4:30 pm CST
T: +1.414.354.0300
Email: sales@u-line.com
u-line.com

## SERVICE & PARTS ASSISTANCE

Monday - Friday 8:00 am to 4:30 pm CST
T: +1.414.354.0300
Service Email: onlineservice@u-line.com
Parts Email: onlineparts@u-line.com

## CONNECT WITH US AT MIDDLEBY REFRIGERATION

## Safety and Warning

**NOTICE**
**Please read all instructions before installing, operating, or servicing the appliance.**

Use this appliance for its intended purpose only and follow these general precautions with those listed throughout this guide:

**SAFETY ALERT DEFINITIONS**

Throughout this guide are safety items labeled with a Danger, Warning, or Caution based on the risk type:

**⚠ DANGER**

**Danger means that failure to follow this safety statement will result in severe personal injury or death.**

**⚠ WARNING**

**Warning means that failure to follow this safety statement could result in serious personal injury or death.**

**⚠ CAUTION**

**Caution means that failure to follow this safety statement may result in minor or moderate personal injury, property, or equipment damage.**

**⚠ DANGER**

**This unit contains R600a (Isobutane) which is a flammable hydrocarbon. It is safe for regular use. Do not use sharp objects to expedite defrosting. Do not service without consulting the "R600a specifications" section included in the User Guide. Do not damage the refrigerant circuit.**

**⚠ WARNING**

**Service must be done by factory authorized service personnel. Any parts shall be replaced with like components. Failure to comply could increase the risk of possible ignition due to incorrect parts or improper service.**

**CALIFORNIA PROPOSITION 65**

**This product contains chemicals known to the state of California to cause cancer and birth defects or other reproductive harm.**

**www.P65warnings.CA.gov**

**⚠ CAUTION**

**This equipment is to be installed with adequate backflow protection to comply with applicable federal, state and local codes.**

## Disposal and Recycling

**⚠ DANGER**

**RISK OF CHILD ENTRAPMENT. Before you throw away your old refrigerator or freezer, take off the doors and leave shelves in place so children may not easily climb inside.**

If the unit is being removed from service for disposal, check and obey all federal, state, and local regulations regarding the disposal and recycling of refrigeration appliances, and follow these steps completely:

1. Remove all consumable contents from the unit.

2. Unplug the electrical cord from its socket.

3. Remove the door(s)/drawer(s).

## Environmental Requirements

This model is intended for indoor/interior applications only and is not to be used in installations that are open/ exposed to natural elements.

This unit is designed to operate between 50°F (10°C) and 100°F (38°C). Higher ambient temperatures may reduce the unit's ability to reach low temperatures and/or reduce ice production on applicable models.

For best performance, keep the unit out of direct sunlight and away from heat generating equipment.

In climates where high humidity and dew points are present, condensation may appear on outside surfaces. This is considered normal. The condensation will evaporate when the humidity drops.

**⚠ CAUTION**

**Damages caused by ambient temperatures of 40°F (4°C) or below are not covered by the warranty.**

## Electrical

**⚠ WARNING**

**SHOCK HAZARD — Electrical Grounding Required. Never attempt to repair or perform maintenance on the unit until the electricity has been disconnected.**

**Never remove the round grounding prong from the plug and never use a two-prong grounding adapter.**

**Altering, cutting or removing power cord, removing power plug, or direct wiring can cause serious injury, fire, loss of property and/or life, and will void the warranty.**

**Never use an extension cord to connect power to the unit.**

**Always keep your working area dry.**

**NOTICE**

**Electrical installation must observe all state and local codes. This unit requires connection to a grounded (three-prong), polarized receptacle that has been placed by a qualified electrician.**

The unit requires a grounded and polarized 115 VAC, 60 Hz, 15A power supply (normal household current). An individual, properly grounded branch circuit or circuit breaker is recommended. A GFCI (ground fault circuit interrupter) is usually not required for fixed location appliances and is not recommended for your unit because it could be prone to nuisance tripping. However, be sure to consult your local codes.

See CUTOUT & PRODUCT DIMENSIONS for recommended receptacle location.

# Cutout & Product Dimensions

### PREPARE SITE

Your U-Line product has been designed for either free-standing or built-in installation. When built-in, your unit does not require additional air space for top, sides, or rear. However, the front grille must NOT be obstructed, and clearance is required for an electrical connection in the rear.

**⚠ CAUTION**

**Unit can NOT be installed behind a closed cabinet door.**

### CUTOUT DIMENSIONS

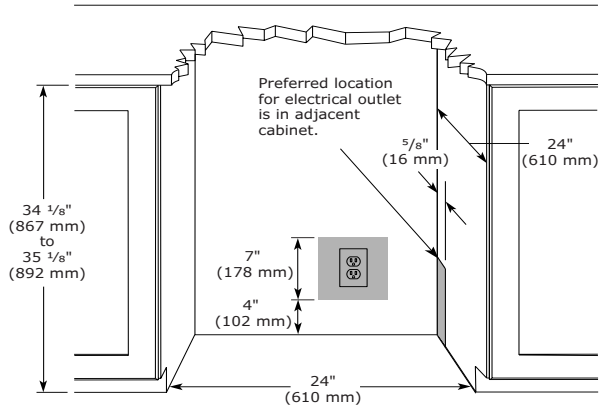


### PRODUCT DIMENSIONS

### REAR

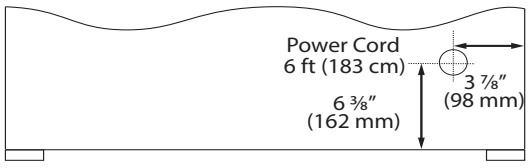


**FRONT**

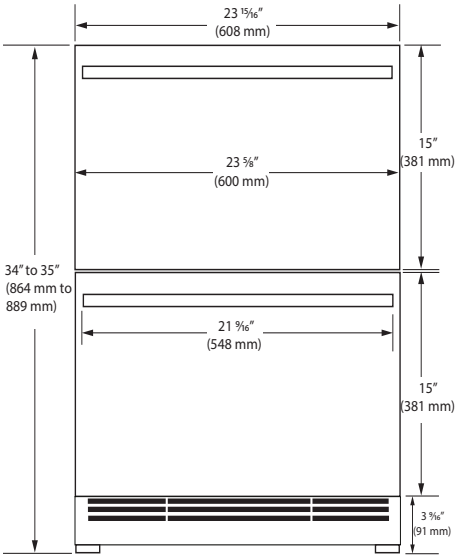


**TOP**

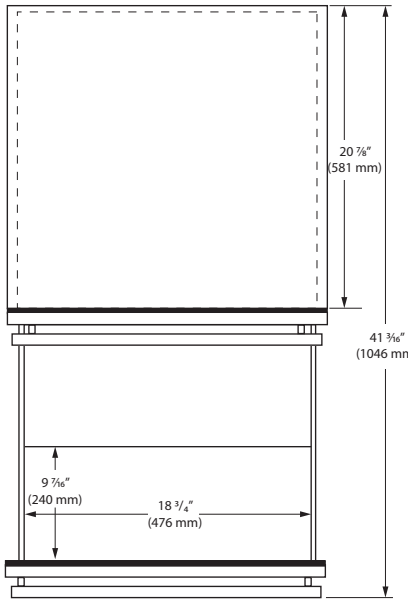


**SIDE**

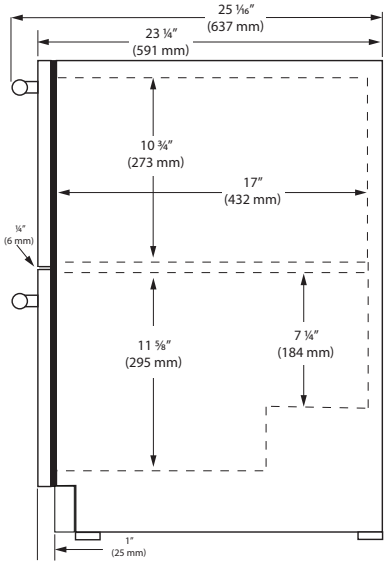

## Side-by-Side Installation

Two units may be installed side-by-side.

Cutout width for a side-by-side installation is the cutout dimension of a single unit times two.

No trim kit is required. However, 1/4" (6 mm) of space needs to be maintained between the units to ensure unobstructed door swing.

Units must operate from separate, properly grounded electrical receptacles placed according to each unit's electrical specifications requirements.

**Side-by-Side Installation with Bracket**

1. Slide both units out so screws on top of units are easily accessible.

2. Remove screws as shown below.

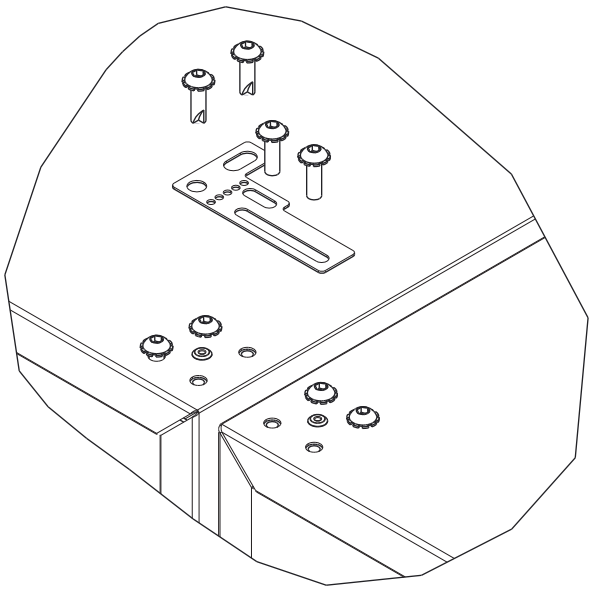

3. Place bracket over holes and attach to unit with two screws removed in step 2 using a T-25 Torx driver. Tighten screws fully.

4. Gently push units into position. Be careful not to entangle the electrical cord or water line, if applicable.

5. Re-check the leveling, from front to back and side to side. Make any necessary adjustments. The unit's top surface should be approximately 1/8" (3 mm) below the countertop.

## Anti-Tip Bracket

1. Slide unit out so screws on top of unit are easily accessible.

2. Remove the two screws from the opposite side of the hinge assembly using a T-25 Torx driver (see below).

NOTE: 24" models use four screws and 15" models use three screws, but same screws are used in both applications.

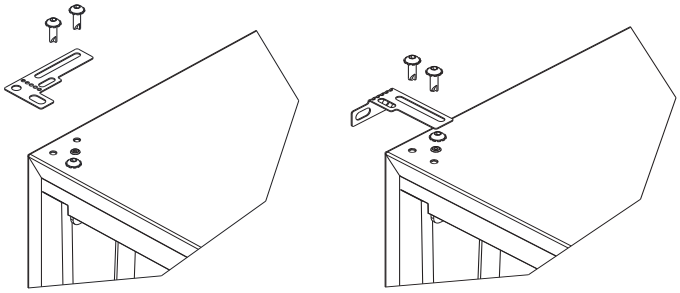

3. Place bracket over holes and attach to unit with two screws removed in step 2 using a T-25 Torx driver. Tighten screws fully.

4. Gently push unit into position. Be careful not to entangle the electrical cord or water line, if applicable.

5. Check to be sure the unit is level from front to back and side to side. Make any necessary adjustments. The unit's top surface should be approximately ⅛" (3 mm) below the countertop.

6. Secure bracket into adjoining surface.

**FLOOR MOUNTED ANTI-TIP INSTALLATION**

1. Locate two anti-tip brackets included with the kit.

2. Place the unit into the area where it will be installed. Check the door, sides, and top for a proper fit. Also test to make sure the door opens and closes freely.

3. Remove grille and place a mark on the floor at the front of the unit. Also place a mark on the floor in the center of the unit.

4. Remove the unit. Using a square, extend center line "B" (see chart below). This line serves as the back edge for the anti-tip brackets. From the center line, measure "A" to the left and right. This line is the outer edge of each bracket.

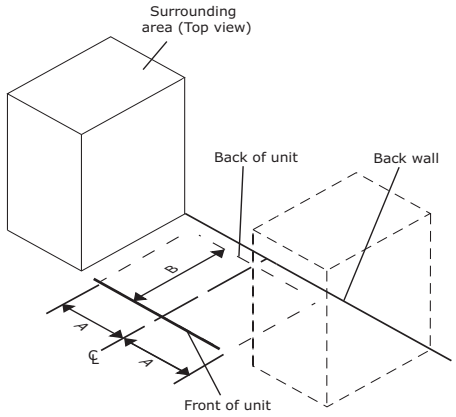


| | 024/124 | 115 |
|---|---|---|
| **A** | 11-1⁄16" (281 mm) | 6-9⁄16" (167 mm) |
| **B** | 20-1⁄4" (514 mm) | 20-1⁄4" (514 mm) |

5. Place the anti-tip brackets on the floor against the line drawn for the outer edge. Mark spots for the screw holes.

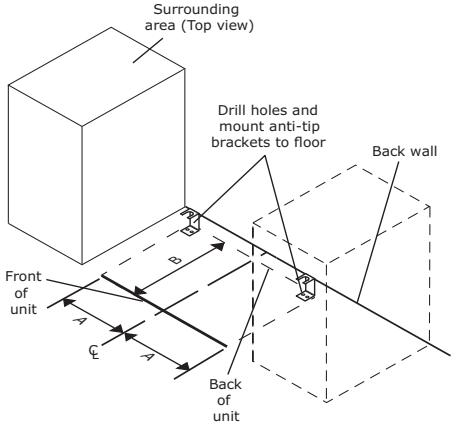


| | 024/124 | 115 |
|---|---|---|
| **A** | 11-1⁄16" (281 mm) | 6-9⁄16" (167 mm) |
| **B** | 20-1⁄4" (514 mm) | 20-1⁄4" (514 mm) |

6. Use a 1/8" drill to make two starter holes and fasten the anti-tip brackets to the floor using the screws provided.

7. Place the unit back into position, making sure the feet engage the anti-tip brackets properly. Check the alignment of the lines made on the floor in step 3 with the position of the front feet to ensure proper positioning.

## General Installation

**LEVELING INFORMATION**

1. Use a level to confirm the unit is level. Level should be placed along top edge and side edge as shown.

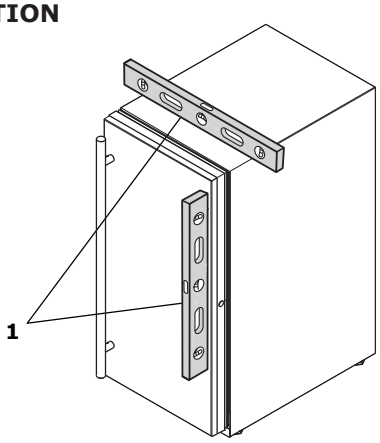


2. If the unit is not level, adjust the legs on the corners of the unit as necessary.

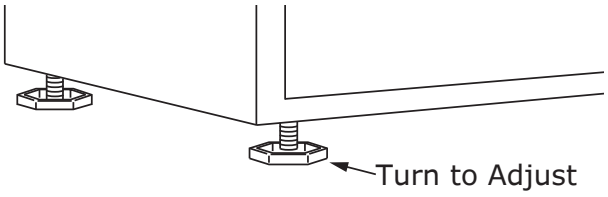


3. Confirm the unit is level after each adjustment and repeat the previous steps as needed.

**INSTALLATION TIP**

If the room floor is higher than the floor in the cutout opening, adjust the rear legs to achieve a total unit rear height of 1⁄8″ (3 mm) less than opening's rear height. Shorten the unit height in the front by adjusting the front legs. This allows the unit to be gently tipped into the opening. Readjust the front legs to level the unit after it is correctly positioned in the opening.

**INSTALLATION**

1. Plug in the power/electrical cord.
2. Gently push the unit into position. Be careful not to entangle the cord or water and drain lines, if applicable.
3. Re-check the leveling, from front to back and side to side. Make any necessary adjustments. The unit's top surface should be approximately 1⁄8″ (3 mm) below the countertop.
4. Install the anti-tip bracket.
5. Remove interior packing material and wipe out the inside of the unit with a clean, water-dampened cloth.

# Integrated Panel Dimensions

**INTEGRATED PANEL**

**NOTICE**

**Due to differences in surrounding cabinetry the panel may not perfectly align with door. The procedure below is designed to provide a finished integrated panel that seamlessly integrates with surrounding cabinetry.**

**The door panel must not weigh more than 20 lbs (10 kg).**

**It is important to ensure that all drilled holes are drilled to the correct depth in order to avoid splits in the wood when hardware is installed.**

**When applying an integrated panel to a unit, ensure that both sides are finished in order to prevent warping. In some overlay panel/frame installations, the panel may be visible through the glass while the door is open.**

**Panel Preparation**

A full integrated door panel completely covers the door frame and provides a built-in appearance.

**Integrated Panel Preparation**

1. Cut the panels to the dimensions listed in the diagram below.

2. Optional: Stain or Finish panel to desired stain or color. Be sure to closely follow the instructions provided by the manufacturer.

3. Optional: Install handles and hardware.

**Integrated Panel Dimensions**

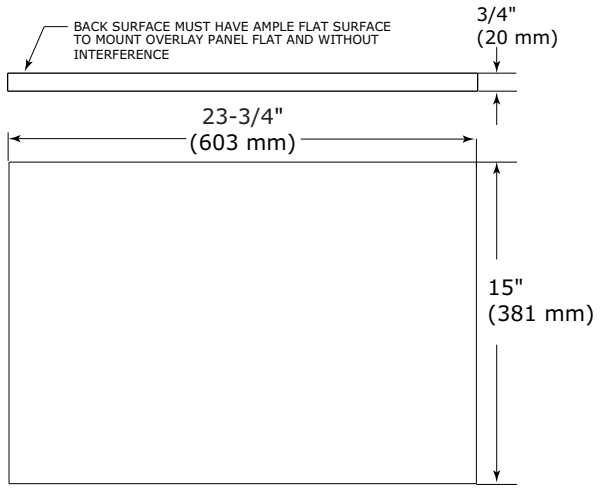


Integrated Panel

**NOTE:**

**Panels may be deeper than $^{3}/_{4}$" provided the weight of the panel does not exceed 20 pounds.**

## Integrated Panel Installation

1. Fully open door/drawer.

2. Starting at corner, pull gasket away from door/ drawer.

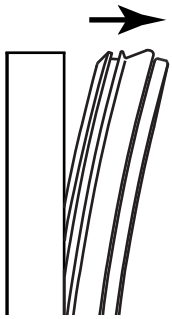

3. Continue to pull gasket free from gasket channel.

4. Upon removal, lay gasket down on a flat surface.

5. Partially loosen the 3 screws, securing the top hinge to the cabinet.

6. Align the panel with the outside edge (opposite the hinge) and high enough to align with the highest point in the door/drawer.

7. Insert panel underneath top hinge and apply upward pressure while bringing the lower portion of the panel flush to the door inside the lower hinge. The panel will fit snuggly

8. Align door with cabinet. Tighten the top 3 screws, securing the top hinge to the cabinet.

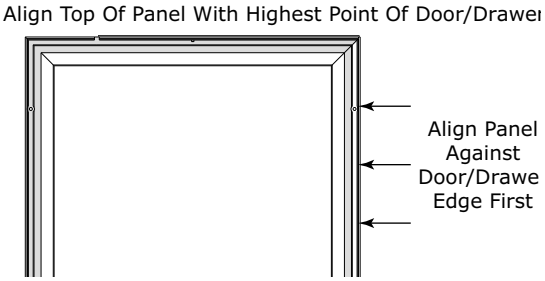


**NOTICE**

**Due to differences in floor construction or surrounding cabinetry, the panel may not sit flush with the top of the door/drawer.**

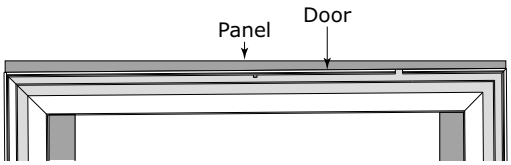


9. Secure integrated panel to door/drawer using clamps. A robust tape may also be used. U-Line recommends the use of bar clamps to secure the panel to the door/drawer. If using tape, be certain the tape will not damage panel finish upon removal.

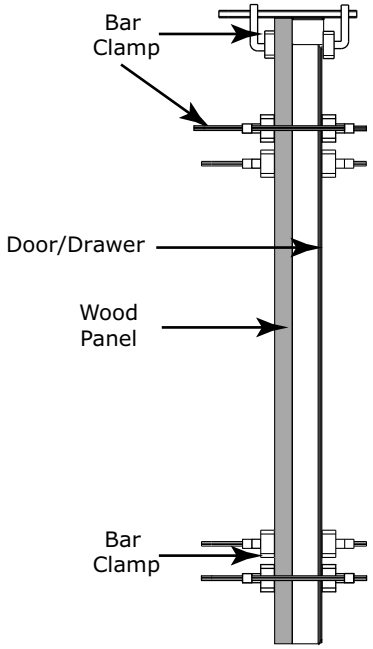


10. Using a 7/64" (3 mm) drill bit, drill 6 pilot holes into the wood panel 1/2" (12 mm) deep using the holes in the door/drawer frame as a guide.

**NOTICE**

**It is important to ensure that all drilled holes are drilled to the correct depth in order to avoid splits in the wood when hardwood is installed.**

11. Locate 6 of the #6x 1-1/4" (32 mm) screws provided with your unit.

12. Using a Phillips screwdriver, place one screw into each of the 6 pilot holes and screw down. Do not overtighten screws.

13. Be sure the screws force their way past the opening on the gasket channel and sit flush against the bottom of the channel.

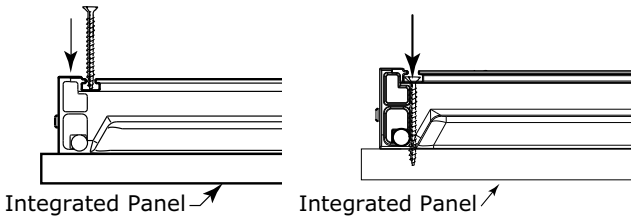


14. Remove clamps from door/drawer.

**NOTICE**

**If panel requires additional adjustment after removing clamps, slightly loosen each screw and adjust panel as necessary. Tighten screws upon completion.**

15. Starting at the corners, re-install the gasket into the gasket channel in the frame. Make sure the gasket is fully seated. This may take some force.

# Grille Installation

**REMOVING AND INSTALLING GRILLE**

**⚠ WARNING**

**Disconnect electric power to the unit before removing the grille.**

**When using the unit, the grille must be installed.**

**⚠ WARNING**

**DO NOT touch the condenser fins. The condenser fins are SHARP and can be easily damaged.**

**Removing the grille**

1. Disconnect power to the unit.

2. Loosen the two screws (1).

3. Remove grille (2) from unit.

**Installing the grille**

1. Align cabinet and grille holes and secure, but do not over tighten grille screws (1).

**Note: When installing next to a 15” wide U-Line product, use the supplied spacers behind the grille. The 24” grille will now be on the same plane as the 15” grille.**

2. Reconnect power to the unit.

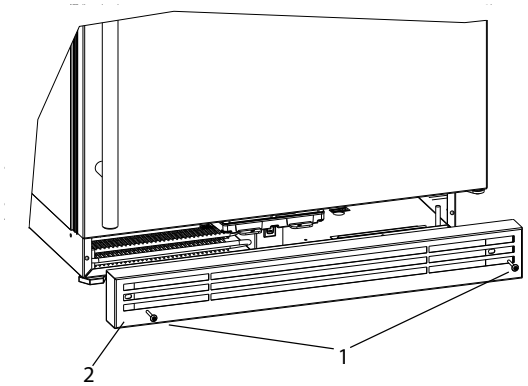

# Drawers

### CHECKING DRAWER ALIGNMENT

The unit's drawers are aligned at the factory before shipment. However, their alignment could have been disturbed during shipment or during overlay panel installation. Check each drawer to confirm that it is aligned:

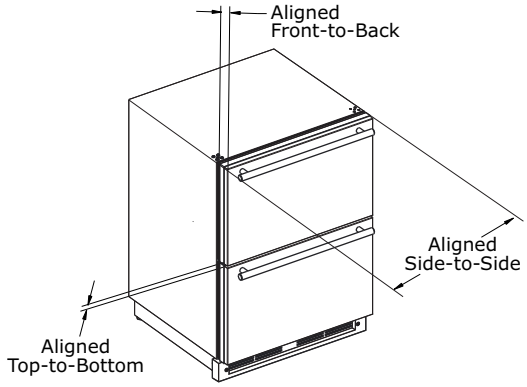


- **Side-to-Side** — When viewed from the top, the drawer front should be square with the sides of the cabinet.
- **Front-to-Back** — When viewed from the side, the drawer front should be straight with the cabinet's sides, not cocked forward or back.
- **Top-to-Bottom** — When viewed from the front, the drawer should be level horizontally.

### ADJUSTING DRAWER ALIGNMENT

**⚠ WARNING**

**SHOCK HAZARD — The unit must be unplugged from the wall outlet during drawer removal, adjustment and re-installation.**

### DRAWER REMOVAL

1. Confirm that the unit is unplugged from wall outlet.
2. Unplug the drawer's connection wiring (top drawer only).
3. Remove the mounting screws.
4. Pull the drawer completely out of the unit.

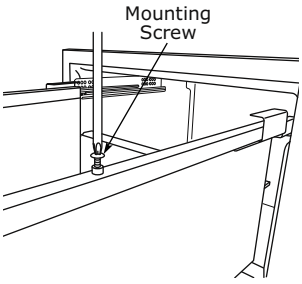


**⚠ CAUTION**

**Use care when handling the drawer. Drawer edges, drawer rail and the unit's slide may be sharp.**

### NOTICE

**Drawer adjustments are made by moving the slide that carries the drawer's rail. Minor adjustments may be made by loosening one of the slide's mounting screws, adjusting the slide and retightening the screw. Severe adjustments may be made by removing the slides' mounting screws, drilling new mounting holes and remounting the slide.**

## SIDE-TO-SIDE ADJUSTMENT

The drawer will need a Side-to-Side Adjustment if, when viewed from the top, the drawer front is not square with the sides of the cabinet. This is caused by one of the slides being mounted too far forward on the unit's liner.

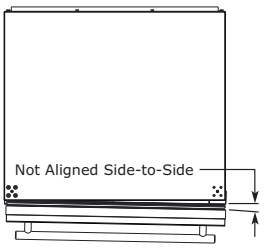

Top View of Unit

### Minor Adjustment:

*Note:* The mounting holes on the slide are slightly larger than the screws' diameter.

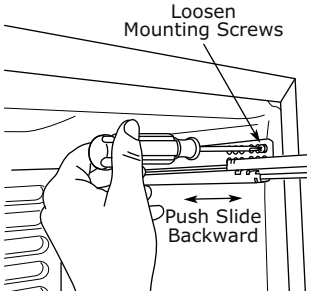


1. Loosen the slide's mounting screws.
2. Push the slide backward.
3. Retighten the screws.

### Severe Adjustment:

*Note:* The slides have extra mounting holes that may be used.

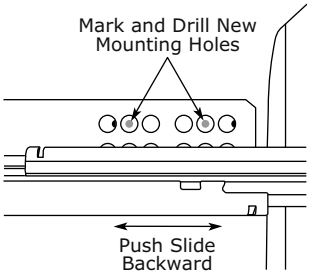


1. Remove the slide's mounting screws.
2. Reposition the slide so it is the same distance from the front of the liner as the other slide. Measure to confirm.
3. Mark new drilling holes using different sets of mounting holes on the slide.

*Note:* Front location holes are shown. Corresponding rear holes will also need to be marked.

4. Drill all the new holes with a #30 drill bit.
5. Remount the slide.

## FRONT-TO-BACK ADJUSTMENT

The drawer will need a Front-to-Back Adjustment if, when viewed from the side, the drawer front is cocked forward or back. This is caused by the front slide mountings not being level with the rear slide mountings.

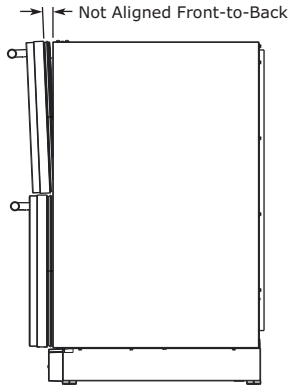

Side View of Unit

### Minor Adjustment:

*Note:* The mounting holes on the slide are slightly larger than the screws' diameter.

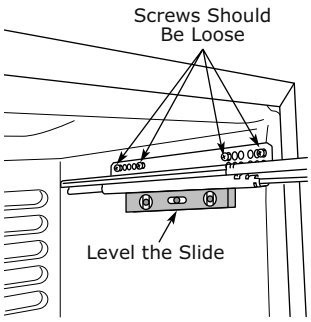


1. Loosen one slide's mounting screws.
2. Level the slide.
3. Retighten the screws.
4. Repeat procedure for the other slide.

**Severe Adjustment:**

*Note:* The slides have extra mounting holes that may be used.

1. Loosen one slide's rear mounting screws.
2. Remove the slide's front mounting screws.
3. Reposition the slide so it is level.

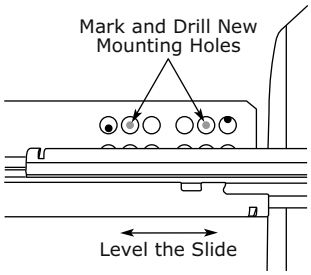


4. Mark new front drilling holes using a different set of mounting holes on the slide.
5. Drill the new holes with a #30 drill bit.
6. Remount the slide.
7. Repeat procedure for the other slide.

**TOP-TO-BOTTOM (AND LEFT-TO-RIGHT) ADJUSTMENT**

The drawer will need a Top-to-Bottom Adjustment if, when viewed from the front, the drawer is not level horizontally. Viewed from the top, one side will protrude. This is caused by one of the slides being mounted higher than the other slide on the unit's liner.

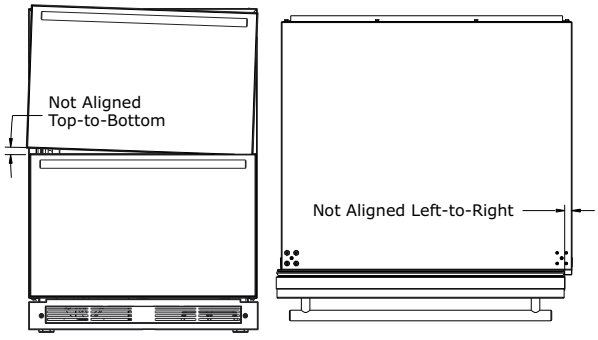


Front View of Unit  Top View of Unit

**Minor Adjustment:**

*Note:* The mounting holes on the slide are slightly larger than the screws' diameter.

1. Loosen one slide's mounting screws.
2. Push the slide upward or downward to match the position of the other slide.
3. Retighten the screws.

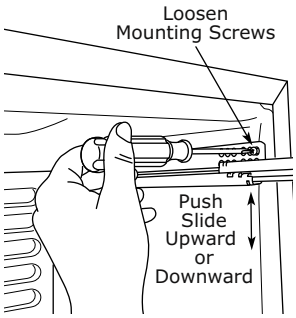


4. Repeat the procedure with the other slide if necessary.

**Severe Adjustment:**

*Note:* The slides have extra mounting holes that may be used.

1. Remove one slide's mounting screws.
2. Reposition the slide so it is the same distance from the bottom of the liner as the other slide. Measure to confirm.

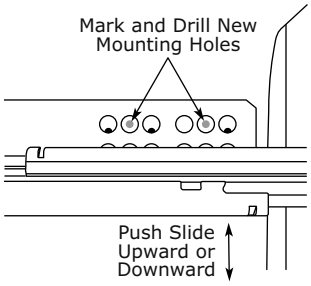


3. Mark new drilling holes using different sets of mounting holes on the slide.

*Note:* Front location holes are shown. Corresponding rear holes will also need to be marked.

4. Drill all the new holes with a #30 drill bit.
5. Remount the slide.

**RE-INSTALLATION OF DRAWER**

**⚠ CAUTION**

**Use care when handling the drawer. Drawer edges, drawer rail and the unit's slide may be sharp.**

1. Set the drawer's rails onto the slides.

2. Re-install the rails' mounting screws.

3. Plug in the drawer's connection wiring (top drawer only).

## Free Standing Kit

Te free standing kit is an optional accessory (ULAFREESTANDS), used when unit is freestanding - not built into a cabinet. Available at u-line.com.

**To install the kit:**

1. Remove grille (see GRILLE INSTALLATION section).

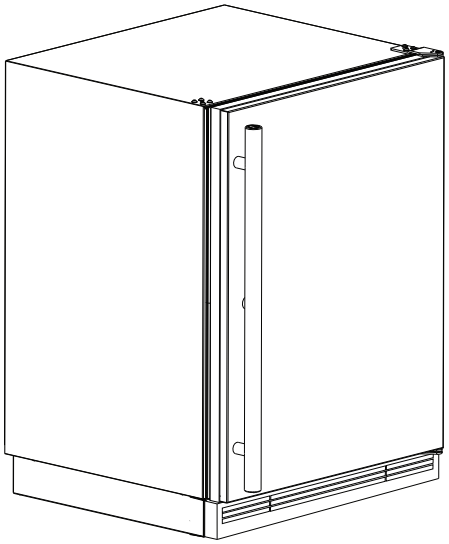

2. Place shell accessory over front and back of cabinet base, aligning holes of shell accessory with the holes on the base. Insert sheet metal screw in back of base.

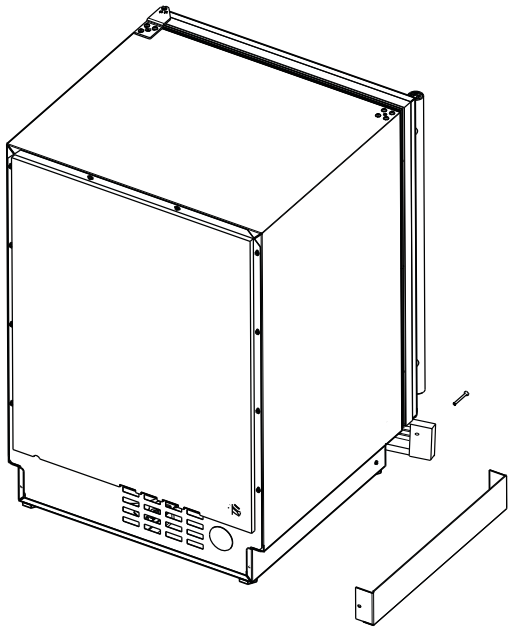

3. Align front hole wit hole in shell accessory, hole in base, and hole in grille. Tighten screw.

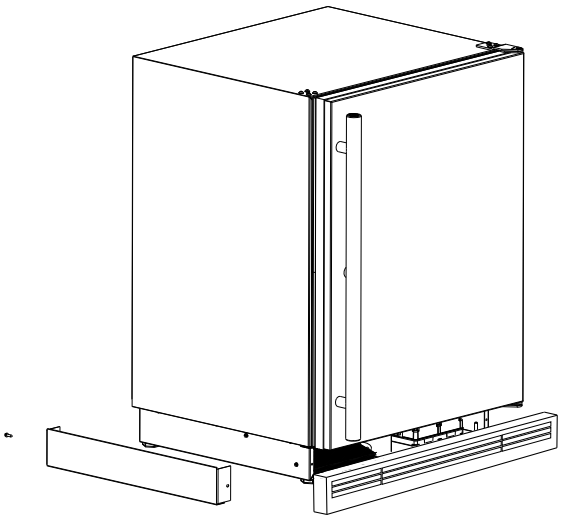

## First Use

Initial startup requires no adjustments. If the unit was turned off, press and hold ⏷ for 5 seconds to turn unit on. See “Control Operation” section for more details.

**NOTICE**

**Temperature displayed reflects actual temperature inside unit.**

If the temperature displayed is different than selected, the unit is progressing towards the selected temperature. Time to reach set point varies based upon ambient temperature, temperature of product loaded, door openings, etc. U-Line recommends allowing the unit to reach set point before loading.

## Control Operation

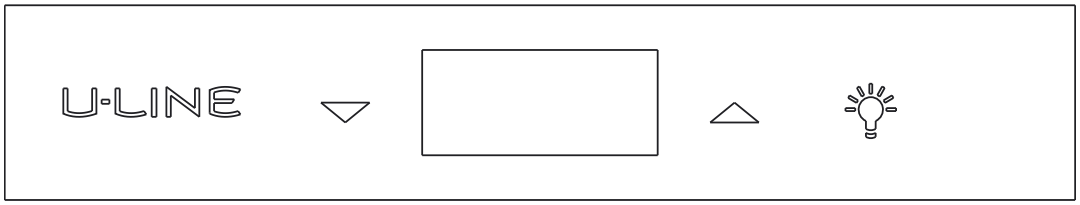


**CONTROL FUNCTION GUIDE**

| FUNCTION | COMMAND | NOTES |
|---|---|---|
| ON/OFF | Press ▽ and hold down for 5 seconds | Unit will turn On or OFF |
| Leave interior light on | Press 💡 and release to leave interior light on for 3 hours; press again to deactivate | After 3 hours, factory default is restored; light will turn on when door is open |
| Adjust Temperature | Press △ or ▽ and release | When the display is flashing, press △ or ▽ to adjust the set point temperature. Note: temperature displayed is the actual temperature inside unit |
| Toggle between $^{O}$F / $^{O}$C | Hold △ and ▽ for 5 seconds | The display will change units |
| Enable Sabbath Mode | Press 💡 and hold for 5 seconds and release | The $^{O}$F / $^{O}$C symbol will flash briefly after 5 seconds. Interior light and display will go dark and remain so until user resets mode - unit continues to operate |
| Disable Sabbath Mode | Press 💡 and release | Display and interior light return to normal operation |
| Showroom Mode | Hold ▽ and 💡 for 5 seconds | Display will show SH for 2 seconds. Interior light and display will function normally, but the compressor and fans will not energize.<br>Repeat command to return to normal operation.<br>Display will show EH for 2 seconds. |

This unit is Star-K certified. See www.star-k.org for more details.

**DOOR ALERT NOTIFICATION**

When the door is left open for more than 5 minutes:

- dr will appear in display

# Airflow and Product Loading

**AIRFLOW**

**External**

- Do not block the front grille - no additional clearance around sides, top or rear of unit is needed for ventilation
- Do not install behind a closed door

**Internal**

- When loading, leave space between internal fans, vents, and side walls to allow air to circulate freely

**NOTICE**

**Restricting airflow may result in poor product performance, product failure, and uneven internal temperatures and may freeze contents.**

## Cleaning

**Stainless Models**

Stainless door panels and handles can discolor when exposed to chlorine gas, pool chemicals, saltwater or cleaners with bleach.

Keep your stainless unit looking new by cleaning with a good quality all-in-one stainless steel cleaner and polish monthly. For best results use Claire® Stainless Steel Polish and Cleaner. Comparable products are acceptable. Frequent cleaning will remove surface contamination that could lead to rust. Some installations may require cleaning weekly.

**Do not clean with steel wool pads.**

**Do not use stainless steel cleaners or polishes on any glass surfaces.**

Clean any glass surfaces with a non-chlorine glass cleaner.

**Do not use cleaners not specifically intended for stainless steel on stainless steel surfaces (this includes glass, tile and counter cleaners).**

If any surface discoloring or rusting appears, clean it quickly with Bon-Ami® or Barkeepers Friend Cleanser® and a nonabrasive cloth. Always clean with the grain. Always finish with Claire® Stainless Steel Polish and Cleaner or comparable product to prevent further problems.

**Using abrasive pads such as Scotchbrite™ will cause the graining in the stainless steel to become blurred.**

**Rust not cleaned up promptly can penetrate the surface of the stainless steel and complete removal of the rust may not be possible.**

**Integrated Models**

To clean integrated panels, use household cleaner per the cabinet manufacturer's recommendation.

**INTERIOR CLEANING**

Disconnect power to the unit.

Clean the interior and all removed components using a mild nonabrasive detergent and warm water solution applied with a soft sponge or non-abrasive cloth.

Rinse the interior using a soft sponge and clean water.

**Do not use any solvent-based or abrasive cleaners.** These types of cleaners may transfer taste to the interior products and damage or discolor the lining.

**DEFROSTING**

Under normal conditions this unit does not require manual defrosting. Minor frost on the rear wall or visible through the evaporator plate vents is normal and will melt during each off cycle.

If there is excessive build-up of 1/4" (6 mm) or more, manually defrost the unit.

Ensure the door is closing and sealing properly.

High ambient temperature and excessive humidity can also produce frost.

**⚠ CAUTION**

**DO NOT use an ice pick or other sharp instrument to help speed up defrosting. These instruments can puncture the inner lining or damage the cooling unit. DO NOT use any type of heater to defrost. Using a heater to speed up defrosting can cause personal injury and damage to the inner lining.**

**NOTICE**

**The drain pan was not designed to capture the water created when manually defrosting. To prevent water from overflowing the drain pan and possibly damaging water sensitive flooring, the unit must be removed from cabinetry.**

**To defrost:**

1. Disconnect power to the unit.
2. Remove all products from the interior.
3. Prop the door in an open position (2 in. [50 mm] minimum).
4. Allow the frost to melt naturally.
5. After the frost melts completely clean the interior and all removed components. (See INTERIOR CLEANING).
6. When the interior is dry, reconnect power and turn unit on.

## Cleaning Condenser

**INTERVAL - EVERY SIX MONTHS**

To maintain operational efficiency, keep the front grille free of dust and lint, and clean the condenser when necessary. Depending on environmental conditions, more or less frequent cleaning may be necessary.

**⚠ WARNING**

**Disconnect electric power to the unit before cleaning the condenser.**

**NOTICE**

**DO NOT use any type of cleaner on the condenser unit. Condenser may be cleaned using a vacuum, soft brush, or compressed air.**

1. Remove the grille. See GRILLE INSTALLATION).
2. Clean the condenser coil using a soft brush or vacuum cleaner.
3. Install the grille.

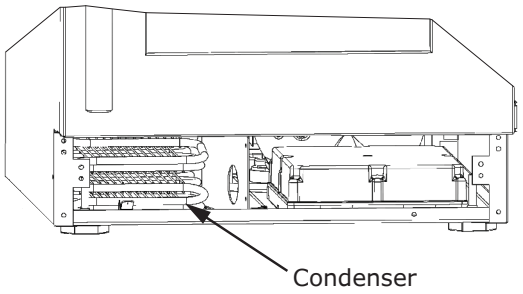

## Extended Non-Use

**VACATION/HOLIDAY, PROLONGED SHUTDOWN**

The following steps are recommended for periods of extended non-use:

1. Remove all consumable content from the unit.

2. Disconnect the power cord from its outlet/socket and leave it disconnected until the unit is returned to service.

3. If ice is on the evaporator, allow ice to thaw naturally.

4. Clean and dry the interior of the unit. Ensure all water has been removed from the unit.

5. The door must remain open to prevent formation of mold and mildew. Open door a minimum of 2" (50 mm) to provide the necessary ventilation.

**WINTERIZATION**

If the unit will be exposed to temperatures of 40°F (5°C) or less, the steps above must be followed.

**For questions regarding winterization, please call U-Line at 414.354.0300.**

**⚠ CAUTION**

**Damage caused by freezing temperatures is not covered by the warranty.**

# Troubleshooting

### BEFORE CALLING FOR SERVICE

If you think your U-Line product is malfunctioning, read the CONTROL OPERATION section to clearly understand the function of the control.

If the problem persists, read the NORMAL OPERATING SOUNDS and TROUBLESHOOTING GUIDE sections below to help you quickly identify common problems and possible causes and remedies. Most often, this will resolve the problem without the need to call for service.

### IF SERVICE IS REQUIRED

If you do not understand a troubleshooting remedy, or your product needs service, contact U-Line Corporation directly at +1.616.754.5601.

When you call, you will need your product Model and Serial Numbers. This information appears on the Model and Serial number plate located on the upper right or rear wall of the interior of your product.

### NORMAL OPERATING SOUNDS

All models incorporate rigid foam insulated cabinets to provide high thermal efficiency and maximum sound reduction for its internal working components. Despite this technology, your model may make sounds that are unfamiliar.

Normal operating sounds may be more noticeable because of the unit's environment. Hard surfaces such as cabinets, wood, vinyl or tiled floors and paneled walls have a tendency to reflect normal appliance operating noises.

Listed below are common refrigeration components with a brief description of the normal operating sounds they make. NOTE: Your product may not contain all the components listed.

- Compressor: The compressor makes a hum or pulsing sound that may be heard when it operates.
- Evaporator: Refrigerant flowing through an evaporator may sound like boiling liquid.
- Condenser Fan: Air moving through a condenser may be heard.
- Automatic Defrost Drain Pan: Water may be heard dripping or running into the drain pan when the unit is in the defrost cycle.

### TROUBLESHOOTING GUIDE

**⚠ DANGER**

**ELECTROCUTION HAZARD. Never attempt to repair or perform maintenance on the unit before disconnecting the main electrical power.**

Troubleshooting - What to check when problems occur:

| Problem | Possible Cause and Remedy |
|---|---|
| Interior Light Does Not Illuminate | If the unit is cooling, it may be in Sabbath mode. |
| Light Remains on When Door Is Closed. | Turn off light switch if equipped.<br>Adjust light actuator bracket on bottom of door. |
| Unit Develops Frost on Internal Surfaces. | Ensure the door is closing and sealing properly. |
| Unit Develops Condensation on External Surfaces. | The unit is exposed to excessive humidity. Moisture will dissipate as humidity levels decrease. |
| Product is Not Cold Enough | Air temperature does not indicate product temperature. See CHECKING PRODUCT TEMPERATURE below.<br>Adjust the temperature to a cooler set point.<br>Ensure unit is not located in excessive ambient temperatures or in direct sunlight.<br>Ensure the door is closing and sealing properly.<br>Ensure the interior light has not remained on too long.<br>Ensure nothing is blocking the front grille, found at the bottom of the unit.<br>Ensure the condenser coil is clean and free of any dirt or lint build-up. |

**CHECKING PRODUCT TEMPERATURE**

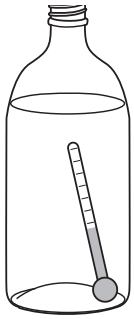

**To check the actual product temperature in the unit:**

1. Partially fill a plastic (nonbreakable) bottle with water.
2. Insert an accurate thermometer.
3. Tighten the bottle cap securely.
4. Place the bottle in the desired area for 24 hours.
5. Avoid opening the unit during the testing period.
6. After 24 hours, check the temperature of the water. If required, adjust the temperature control in a small increment (see CONTROL OPERATION).

**Causes which affect the internal temperatures of the cabinet include:**

- Temperature setting.
- Ambient temperature where installed.
- Installation in direct sunlight or near a heat source.
- The number of door openings and the time the door is open.
- The time the internal light is illuminated. (This mainly affects product on the top rack or shelf.)
- Obstruction of front grille or condenser.

## Wire Diagram

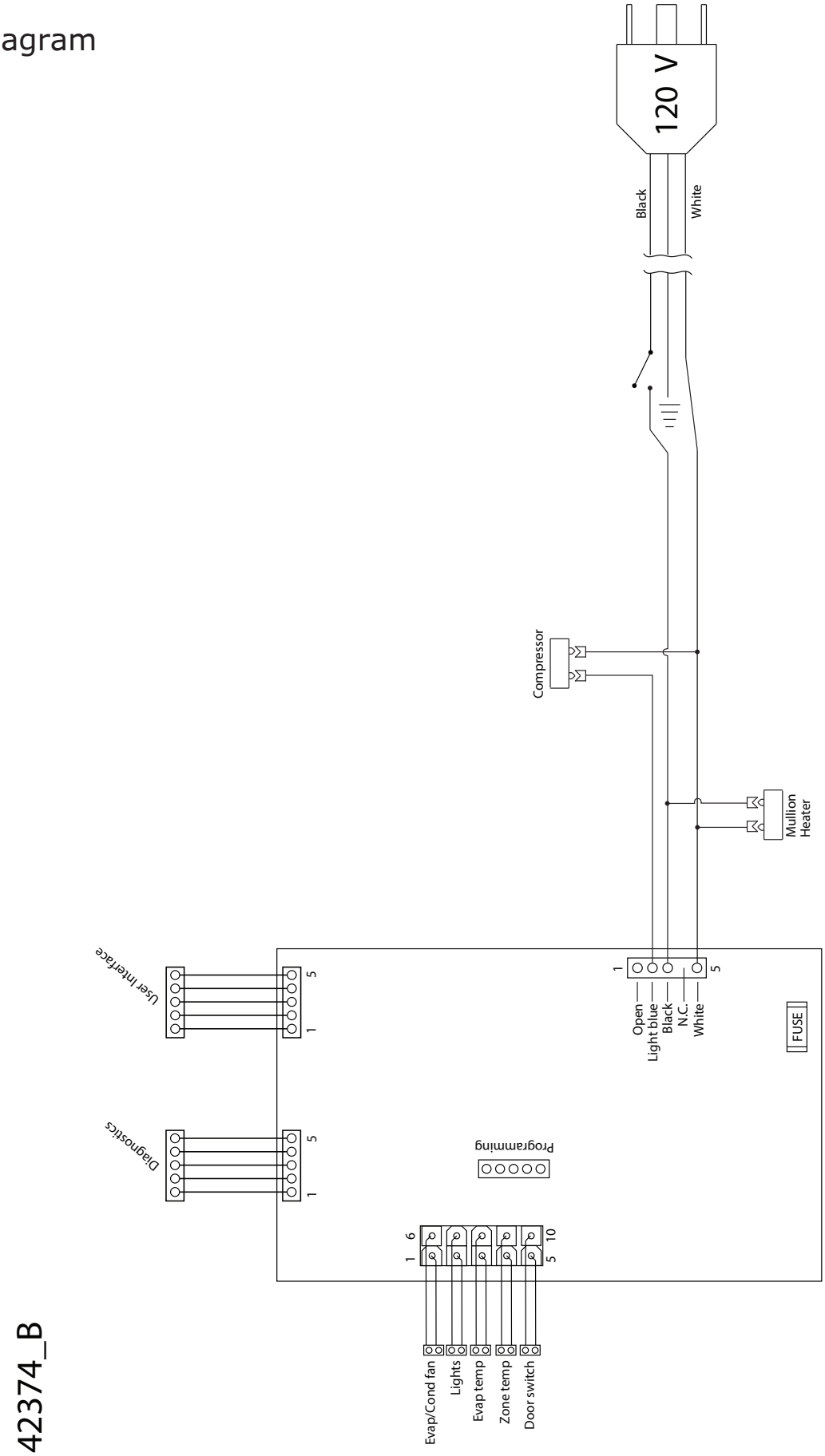

## Product Liability

Field service technicians are authorized to make an initial assessment in the event of reported damages. If there are any questions about the process involved, the technician should call U-Line for further explanation.

While inspecting for defects or installation issues, photos should be taken to document any damages or issues found.

During the assessment, if the service technician is able to find the source of the damage and it can be resolved by replacement of a part, the servicer is authorized to replace the part in question. The part that caused the damage must be returned to U-Line in its entirety. The part must be clearly labeled with the serial number of the unit it was removed from, the date, and the servicer who removed the part.

If the service technician determines the damage is the result of installation issues (water connection/drain, etc.), the consumer would be notified and the issues shall be resolved at the direction of the consumer.

If damage is evident and the service technician is unable to find the source, U-Line must be contacted at +1.414.354.0300 for further direction.

8900 N. 55th Street • Milwaukee, WI 53223
T: +1.414.354.0300 • F: +1.414.354.5696
Website: www.u-line.com

Right product. Right place.
Right temperature Since 1962.

## Parts

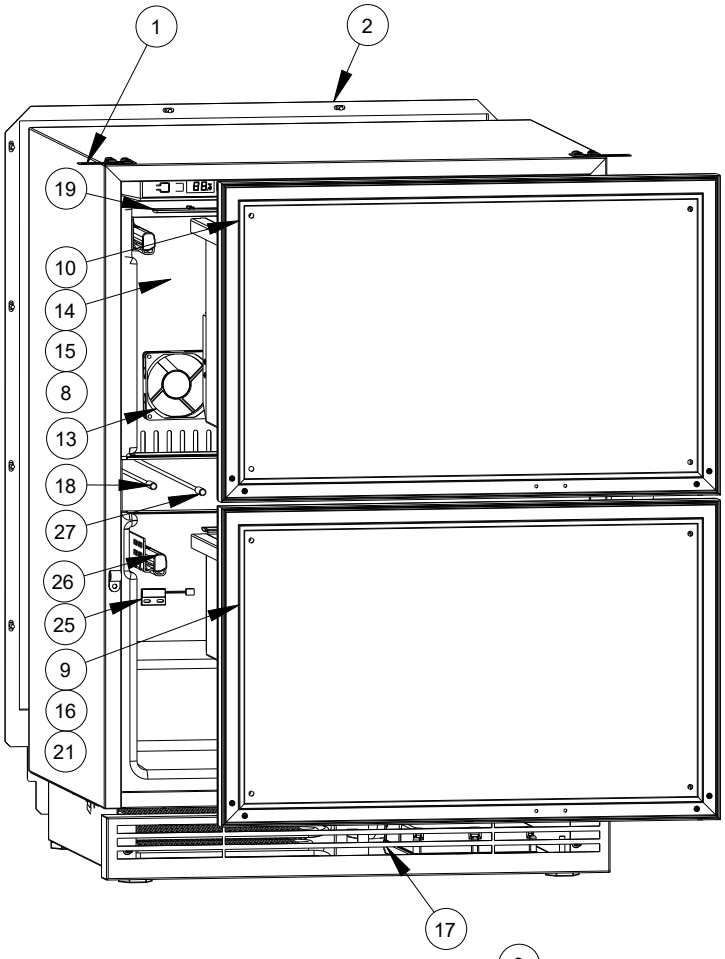


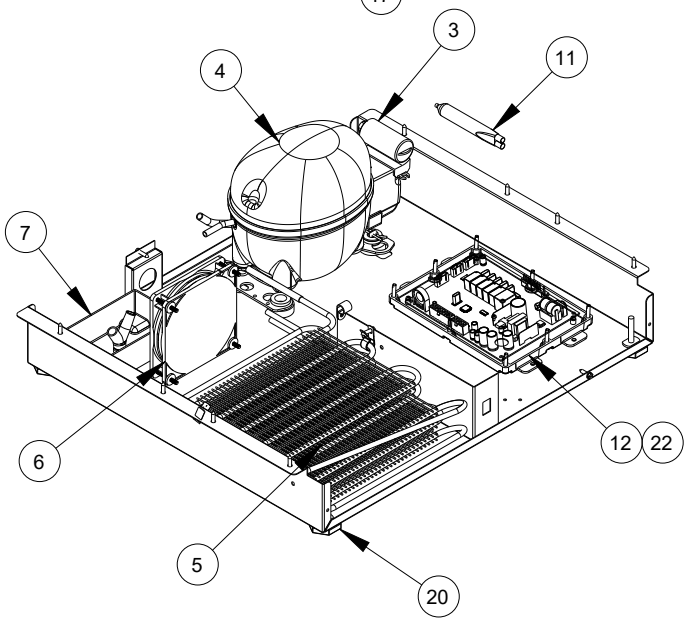


| | UHDR124-IS61A | |
|---|---|---|
| **Item** | **Description** | **U-Line P/N** |
| 1 | ANTI TIP BRACKET W/SCREWS | 80-54239-00 |
| 2 | BACK PANEL | 80-54204-00 |
| 3 | COMPRESSOR ELECTRICALS ONLY | 80-54149-00 |
| 4 | COMPRESSOR W/ELECTRICALS | 80-54150-00 |
| 5 | CONDENSER ASSEMBLY | 80-54801-00 |
| 6 | CONDENSER FAN W/SCREWS | 80-54014-00 |
| 7 | DRAIN PAN | 80-54217-00 |
| 8 | DRAIN TROUGH ASSEMBLY | 80-54399-00 |
| 9 | DRAWER ASSEMBLY, BTM | 80-54337-00 |
| 10 | DRAWER ASSEMBLY, TOP | 80-54855-00 |
| 11 | DRIER | 80-54055-00 |
| 12 | ENCLOSURE ASSEMBLY, BOARD | 80-54532-00 |
| 13 | EVAP FAN W/COVER AND SCREWS | 80-54151-00 |
| 14 | EVAPORATOR ASSY | 80-55422-00 |
| 15 | EVAPORATOR COVER, BLACK METAL | 80-55550-01 |
| 16 | GASKET, DRAWER | 80-54288-00 |
| 17 | GRILLE ASSEMBLY | 80-55597-01 |
| 18 | HI TEMP THERMISTOR | 80-54070-00 |
| 19 | LED LIGHT STRIP AND COVER ASSY | 80-54000-00 |
| 20 | LEG LEVELERS (4) | 80-54019-00 |
| 21 | MAGNET | 80-54100-00 |
| 22 | MAIN BOARD/DISPLAY, BLACK | 80-55610-00 |
| 23 | PACKAGING * | 80-54209-00 |
| 24 | POWER CORD, EXTERNAL * | 80-55614-00 |
| 25 | REED SWITCH ASSY | 80-54805-00 |
| 26 | SLIDE ASSEMBLY | 80-54287-00 |
| 27 | THERMISTOR(1 PC) | 80-54006-00 |
| 28 | WIRE HARNESS, HIGH VLT * | 80-55408-00 |
| 29 | WIRE HARNESS, LOW VLT * | 80-55409-00 |

*NOT SHOWN

## R-600A Specifications

For R-600a refrigerant service tips and more videos, go to: www.u-line.com/videos.

**⚠ WARNING**

**Flammability warnings for a pure-iso-butane refrigerant.**










Technician must observe all federal, state and local laws regarding refrigerants.

**Gloves and Eye Protection must be used.**





**R-600a is considered non-toxic, but is flammable when mixed with air.**

**Keep a dry powder type fire extinguisher in the work area.**




**R-600a is heavier than air, do not allow any leakage/migration to low areas such as basements and stairs.**

**Never use a torch on a fully charged refrigeration system.**

**Never substitute U-Line OEM replacement parts or methods of construction.**

**R-600a must be stored and transported in approved containers.**

**⚠ WARNING**

**Only skilled and well trained service technicians permitted to service R-600a equipped products.**

**All tools and equipment must be approved for use with R-600a refrigerant.**

**Local, state and federal laws, standards must be observed along with proper certification and licensing.**

**Ventilation is required during servicing.**

**No conversions to R-600a from any other refrigerants. OEM R-600a equipped unit only.**

**Service area must be free of ignition sources.**

**No smoking is allowed in the service area.**

**All replacement electrical components must be OEM and installed properly (sealed and covered).**

**If the evaporator is cold prior to service, it must be thawed prior to service.**

**When using a vacuum pump, start pump before opening refrigeration system.**

**Vacuum pump and recovery equipment should be at least 10 feet from the work area.**

**It is recommended that a simple LPG gas detector is on site during service.**

**Ensure that all R-600a is removed from the system prior to brazing any part of the sealed system.**

**Only a clean, dry leak free system should be charged with R-600a.**

**R-600A SPECIFICATIONS/LABELING**

R-600a equipped products are labeled (both the unit and the compressor).

R-600a is colorless and odorless.

R-600a is considered non-toxic, but is flammable when mixed with air.

Do not remove or alter any R-600a labeling on the product.

Use only a refrigerant grade R-600a from a properly labeled container.

**RECOVERING/RECLAIMING R-600A**

(R-600a has been exempted from recovery/reclaiming requirements by the US EPA)

Recovery/Reclaiming equipment must be approved for use with R-600a.

Ensure the evaporator is at room temperature prior to recovery/reclaiming R-600a.

Use a common piercing pliers or piercing valve to remove R-600a from the compressor process tube. (Note: Piercing devices must not be left on the system and must be replaced with a Schrader type valve.)

Evacuate/reclaim via the piecing pliers to ensure the system is empty of R-600a before any system work is performed.




The recovery cylinder must be evacuated (no air inside) prior to accepting R-600a.

The recovery cylinder must not be filled more than 45% safe fill level and refrigerants must not be mixed.

The recovery cylinder must be clearly marked with R-600a and Flammable Warning labels.

Ensure proper ventilation during recovery/reclaiming of R-600a.

Start vacuum pump/recovery pump prior to piercing the compressor process tube.

Follow recovery/reclaim OEM instructions for the specific equipment used.

**SYSTEM REPAIR**

Ensure no residual R-600a refrigerant is left within the system prior to repair (simple venting is not sufficient).

Evacuate and charge with dry nitrogen for leak checks.

Repair leaks or replace system parts as required.

When re-brazing, the system must be purged with dry nitrogen and at least one access point open to the atmosphere.

When re-brazing, proper ventilation is required along with constant monitoring for the presence of R600a refrigerant.

The filter dryer must be replaced any time the sealed system is serviced.

No system should be open to the atmosphere for longer than 15 minutes to avoid moisture migration into the system components.

**LEAK DETECTION**

After removal of the R-600a, the unit can be charged with dry nitrogen or helium.

Electronic leak detection or soap solution can be used to check for nitrogen/helium leaks.




Never use a halide torch or lighted match to check the system for leaks at any time.

The high side of the refrigeration system (compressor discharge to outlet of drier) must be leak tested with the compressor running.

The low side of the refrigeration system (evaporator, compressor and suction line) must be leak tested with the compressor off (equalized pressure).

**RECHARGING**

No air is ever to be allowed inside the refrigeration system (R-600a refrigerant or dry nitrogen only).

Never use a torch on a fully charged refrigeration system.

Install a Schrader Type access port on the compressor process stub.



Evacuate the system to 100 microns prior to charging.

Weigh in the R-600a charge using a refrigerant scale. (run compressor an extra two minutes to clear the charging hoses).

Seal the Schrader Type access port, a proper cap and seal must be used to close the system.



**SUMMARY**

Safely handling R-600a requires proper procedures and training.

R-600a approved service tools must be used.

R-600a labeling must not be removed or altered.

Proper ventilation during service is required.

Never apply a torch to a charged R-600a refrigeration system.

Use OEM replacement service parts and do not alter the construction of the unit.

## System Diagnosis Guide

**REGRIGERATION SYSTEM DIAGNOSIS GUIDE**

| System Condition | Suction Pressure | Suction Line | Compressor Discharge | Condenser | Capillary Tube | Evaporator | Wattage |
|---|---|---|---|---|---|---|---|
| **Normal** | Normal | Slightly below room temperature | Very hot | Very hot | Warm | Cold | Normal |
| **Overcharge** | Higher than normal | Very cold may frost heavily | Slightly warm to hot | Hot to warm | Cool | Cold | Higher than normal |
| **Undercharge** | Lower than normal | Warm- near room temperature | Hot | Warm | Warm | Extremely cold near inlet - Outlet below room temperature | Lower than normal |
| **Partial Restriction** | Somewhat lower than normal vacuum | Warm- near room temperature | Very hot | Top passes warm - Lower passes cool (near room temperature) due to liquid | Room temperature (cool) or colder | Extremely cold near inlet - Outlet below room temperature backing up | Lower than normal |
| **Complete Restriction** | In deep vacuum | Room temperature (cool) | Room temperature (cool) | Room temperature (cool) | Room temperature (cool) | No refrigeration | Lower than normal |
| **No Gas** | 0 PSIG to 25" | Room temperature (cool) | Cool to hot | Room temperature (cool) | Room temperature (cool) | No refrigeration | Lower than normal |

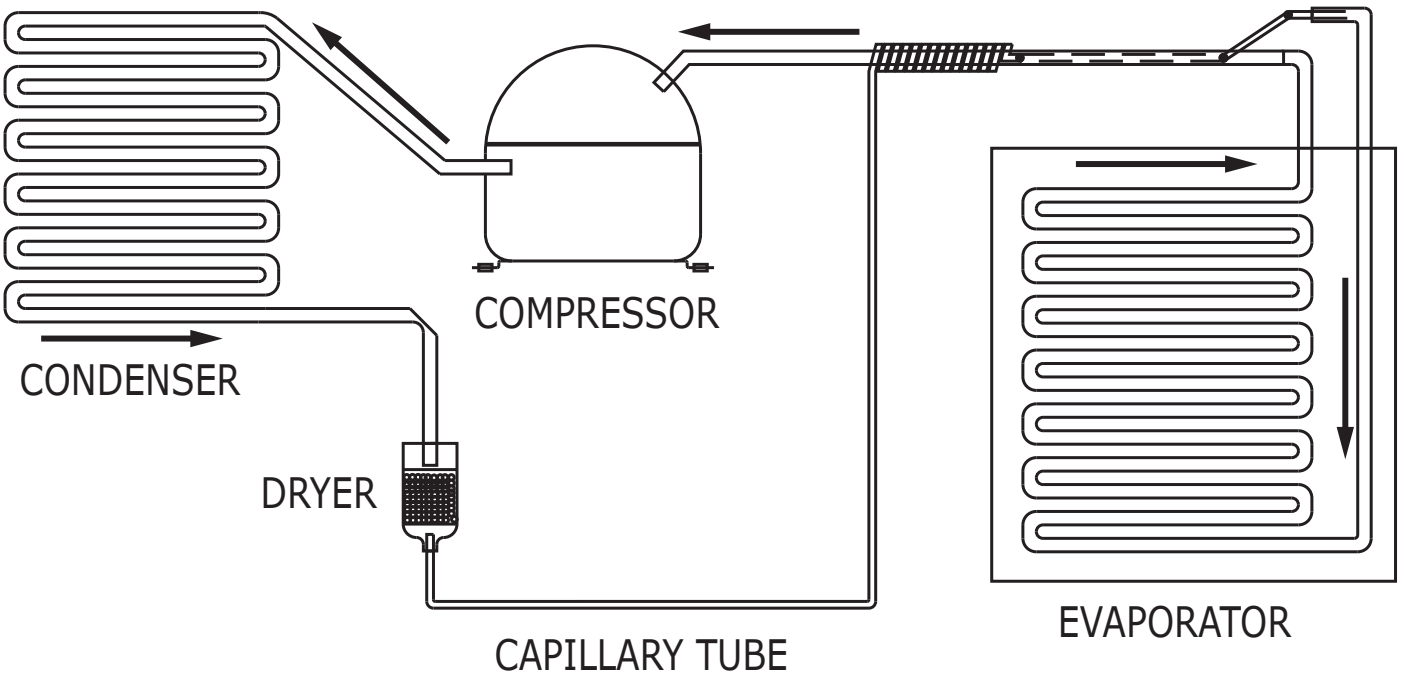

## Compressor Specifications

**DANGER**

**Electrocution can cause death or serious injury. Burns from hot or cold surfaces can cause serious injury. Take precautions when servicing this unit.**

**Disconnect the power source.**

**Do not stand in standing water when working around electrical appliances.**

**Make sure the surfaces you touch are not hot or frozen.**

**Do not touch a bare circuit board unless you are wearing an anti-static wrist strap that is grounded to an electrical ground or grounded water pipe.**

**Handle circuit boards carefully and avoid touching components.**

To measure the start winding resistance, measure across the C and S pins.

To measure the run winding resistance, measure across the C and R pins.

Also check S to R and you should get the sum of the run and start windings.

To ensure the windings are not shorted, check the S and R to ground.

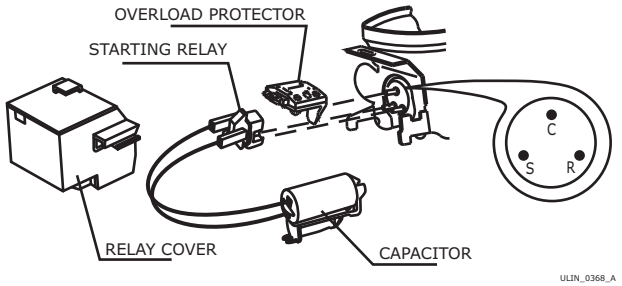


| | EMX20CLC |
|---|---|
| Refrigerant | R600a |
| Voltage | 115 - 127 VAC |
| Frequency | 60 Hz |
| Run Cap | 12µF/165 VAC |
| Start Winding | 6.7 Ohm at 77°F |
| Run Winding | 12.6 Ohm at 77°F |
| LRA | 3.7 A |
| FLA | 0.5 A |
| Starting Device | 8EA14C |
| Overload | 4TM142RFBYY-53 |

* All resistance readings are ±10%

# Troubleshooting - Extended

**⚠ CAUTION**

**Never attempt to repair or perform maintenance on the unit until the main electrical power has been disconnected from the unit.**

### SPECIFIC ERRORS AND ISSUES

The advanced diagnostic capabilities of the electronic controls utilized on the 1, 3, and 5 Class units allow for easy and thorough troubleshooting.

Navigation of the control is the key and is explained in the CONTROL OPERATION section of the manual, along with control button layout, control function descriptions, a service mode menu and service menu selection explanations.

Verification of temperature and thermistor performance can be identified by directly viewing thermistor readings in the service mode.

Included in this section are some diagnostic tips; if additional help is required, please contact the U-Line Corp, “Customer Care Facility” at +1.414.354.0300 for assistance.

### NORMAL OPERATING SOUNDS

All models incorporate rigid foam insulated cabinets to provide high thermal efficiency and maximum sound reduction for its internal working components. Despite this technology, your model may make sounds that are unfamiliar.

Normal operating sounds may be more noticeable because of the unit’s environment. Hard surfaces such as cabinets, wood, vinyl or tiled floors and paneled walls have a tendency to reflect normal appliance operating noises.

Listed below are common refrigeration components with a brief description of the normal sounds they make. NOTE: Your product may not contain all the components listed.

- Compressor: The compressor makes a hum or pulsing sound that may be heard when it operates.
- Evaporator: Refrigerant flowing through an evaporator may sound like boiling liquid.
- Condenser Fan: Air moving through a condenser may be heard.
- Automatic Defrost Drain Pan: Water may be heard dripping or running into the drain pan when the unit is in the defrost cycle.

Solenoid Valves: An occasional clicking sound may be heard as solenoid valves are operated.

**TROUBLESHOOTING GUIDE**

| Concern | Potential Causes | Action |
|---|---|---|
| Not Cooling | Compressor overheating | Verify proper air flow through condenser. Is condenser clean? |
| | | Confirm condenser fan operation. |
| | Compressor not operating | Test overload and relay, replace as needed. |
| | Compressor operating - no cooling | Refer to System Diagnosis Guide. |
| Frozen Product | Control set too cold | Adjust Set Point Temp accordingly. |
| | Thermistor failure | Check Error Log in Service Mode, OHM thermistor. |
| Frost Buildup Inside Unit | Door Ajar or Restricted from Closing | Check door clearance to adjoining cabinetry. Check distribution of product in unit. |
| | Thermistor failure | OHM thermistor |
| Display Not Working | Display unplugged | Verify that both ends of the display wiring are firmly connected. |
| | Display wiring broken or damaged | Perform continuity test of wiring and replace as needed. |
| Interior Lights Not Working | Door switch misaligned or defective | Check the function of reed switch and door magnet adjustment. |
| Noisy | Refrigeration tubing touching cabinet | Carefully reposition tubing. |
| | Fan blade obstruction (wiring, foam insulation, packaging material) | Remove obstruction. |

### MAIN CONTROL

The main control board is very robust and is rarely the cause of system issues. It is important to fully diagnose the board for any suspected failures before attempting to remove the board for replacement or service. Follow the guidelines below to fully test and diagnose the main control.

### Power Fault

If the unit does not (or seems to not) power on, follow the flow chart below to help diagnose the issue. Before beginning it is important to first verify the unit is not simply set to sabbath mode.

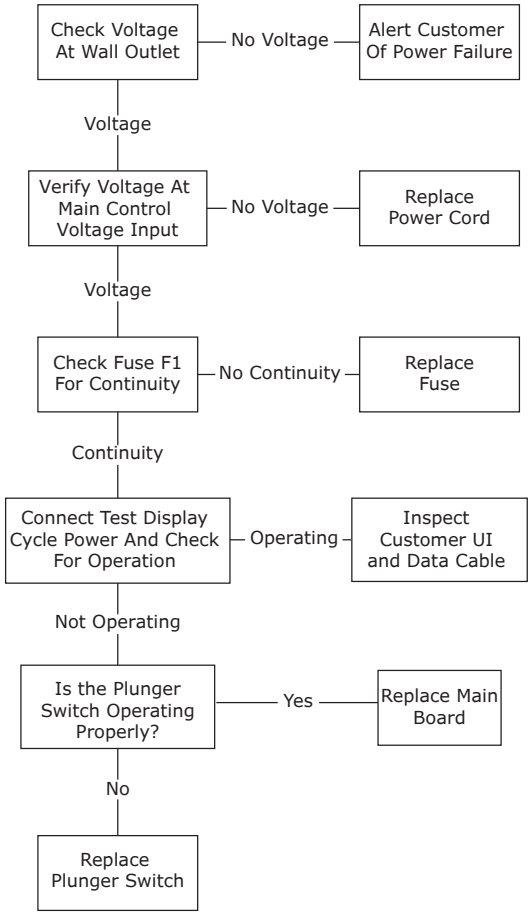


**⚠ CAUTION**

**Precautions must be taken while working with live electrical equipment. Be sure to follow proper safety procedures while performing tests on live systems.**

### PLUNGER SWITCH

A plunger switch is used to monitor door state. When the door is closed it comes into contact with the plunger which closes a circuit which turns the light and display off. When the door is open the plunger moves outward and opens the circuit. If the door is left open for longer than 5 minutes the switch will trigger an error code and set an audible warning.

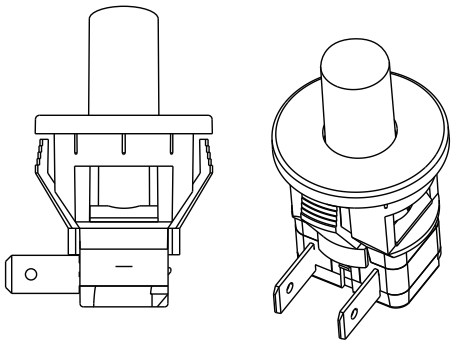

## Control Operation-Service

**UI BUTTON LAYOUT**

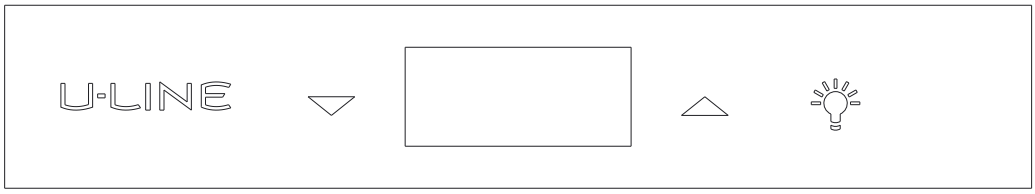


1. **Up Button**
   -Increases temperature
   -Navigates through service menu
   -LED activated with button activation

2. **Down Button**
   -Decreases temperature
   -Navigates through service menu
   -LED activated with button activation

3. **Light Button**
   -Activates light for 3 hours on select models
   -Used to select items in service menu
   -LED activated with button activation

**CONTROL FUNCTION GUIDE**

| FUNCTION | COMMAND | NOTES |
|---|---|---|
| Defrost Duration | Enter menu by pressing △ for more than 5 seconds. Use △ or ▽ to increase/reduce defrost duration. Press 💡 to select. | Display shows “df” (defrosting). This controls how long the unit defrosts. |
| Defrost Period | Press 💡 once again. Use △ or ▽ to increase/reduce defrost period. Press 💡 again. | Display shows the interval in which the unit defrosts in hours. |
| Set Offset Temperature | Use △ or ▽ to increase/reduce temperature. | Each adjustment for this setting is 1 degree: Positive = colder Negative = warmer |
| Exit Menu | Press 💡 and release | |

## Thermistors

Thermistors are used for various temperature readings. Thermistors provide reliable temperature readings using a resistance which varies based on surrounding temperatures. If a faulty thermistor is suspected it may be tested using an accurate ohmmeter.

Both thermistors in the unit are identical. If a thermistor is suspected of being defective, the resistance can be verified. Place the thermistor in an ice water bath, the resistance should read 16.1k Ohms +/-5% on your meter.

Thermistor connections must be kept clean. A thermistor connection that has become corroded can cause resistance values from the thermistor to change as they pass through a dirty connection to the board.

It is for that reason that we apply dielectric grease to all of our thermistor connections. Dielectric grease will help to keep thermistor connections clean and dry.

If you change a thermistor in the unit please re-apply dielectric grease to the connection. If you encounter a dirty thermistor connection, you should replace the thermistor and the thermistor harness.

Thermistor error information can be found in the Control Operations - Service section.

This unit has **one** thermistor.

**Thermistor one (Zone):**

Located along the right hand side wall. It is used to maintain the operating temperature within that zone.

**THERMISTOR FAILURE**

**Zone Thermistor**

If the zone thermistor in the unit fails, the unit will continue to cool in a backup mode (Self Preservation Mode) to preserve the integrity of the contents. The unit will otherwise operate normally.

Thermistor Resistance Data

| Temp (F) | Temp (C) | Nominal Resistance (OHMS)* |
|---|---|---|
| -40 | -40 | 169157 |
| -31 | -35 | 121795 |
| -22 | -30 | 88766 |
| -13 | -25 | 65333 |
| -4 | -20 | 48614 |
| 5 | -15 | 36503 |
| 14 | -10 | 27681 |
| 23 | -5 | 21166 |
| 32 | 0 | 16330 |
| 41 | 5 | 12696 |
| 50 | 10 | 9951 |
| 59 | 15 | 7855 |
| 68 | 20 | 6246 |
| 77 | 25 | 5000 |
| 86 | 30 | 4029 |
| 95 | 35 | 3266 |
| 104 | 40 | 2665 |
| 113 | 45 | 2186 |
| 122 | 50 | 1803 |
| 131 | 55 | 1495 |
| 140 | 60 | 1247 |
| 149 | 65 | 1044 |
| 158 | 70 | 879 |
| 167 | 75 | 743 |
| 176 | 80 | 631 |

* (+/- 5%)

## Defrost

Outdoor units defrost every 12 hours of compressor runtime for 45 minutes. If you have verified that the unit does not have an ambient air leak, utilize the **Control Operation - Service** section and adjust unit to defrost every 9 hours for 60 minutes

## Remove Fan and Cover

**CONVECTION COOLING**

This unit is equipped with an advanced convection cooling system. Convection cooling stabilizes cabinet temperature, cools product faster and increases energy efficiency.

**Evaporator Fan**

The evaporator fan is responsible for circulating warm air from the refrigeration zone, past the evaporator and back into the refrigerated zone.

The evaporator fan is factory set to have a 1 minute delay at the beginning of a cooling cycle. This delay gives the evaporator time to cool properly before warm air is passed over it. The fan will continue to run for an additional 2 minutes at the end of a cooling cycle. Fan delay times can be modified through the service menu.

Evaporator fan operation is also determined by door switch state. If the door switch circuit opens, the fan will stop. When the door switch circuit is closed the fan will either continue running with the cooling cycle, or if not currently cooling, the fan will run for 1 minute to circulate air and clear any condensation that may have appeared on glass doors and shelves.

*Note:* If the unit is set to sabbath mode, the evaporator fan will no longer respond to the state of the door switch.

In order to operate efficiently, the evaporator fan blade and vents should be unobstructed and free of any dust buildup.

**Evaporator Fan Replacement**

Should the evaporator fan need to be replaced follow the steps below.

1. Remove any product from the unit.
2. Remove unit from cabinetry to access rear.
3. Disconnect power to the unit.
4. Remove back panel from unit.
5. Disconnect fan electrical connection at rear of unit.
6. Remove insulating foam from refrigerant line pass-through hole as needed to gain clearance for fan plug.
7. Remove internal shelving.
8. Remove rear shelf clips, fronts can remain.
9. Remove thermistor cover.
10. Remove two evaporator cover screws from top of evaporator plate.

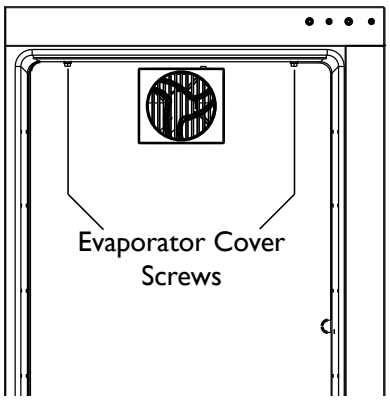


11. Grasp evaporator cover, pull forward and up as bottom of cover is installed behind the front edge of the drain trough.
12. While pulling the evaporator cover clear of the unit, it may be necessary to use your free hand to manipulate the fan plug end through the pass-through hole.
13. Remove the 4 screws mounting the fan shroud to the evaporator plate.

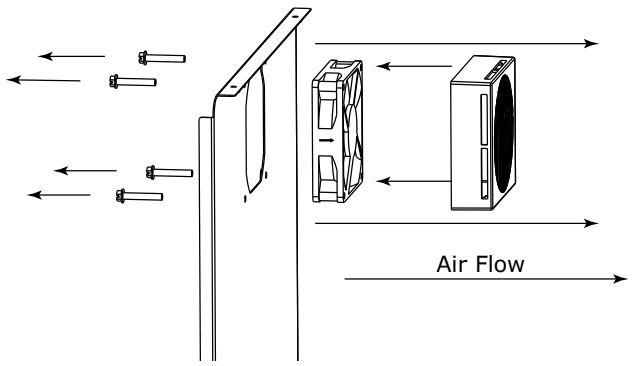

14. Remove and replace fan. Take special care to properly route fan wire.

**NOTICE**

**Fan must be oriented to pull air in through lower evaporator cover vents and push air out at fan mounting location.**

15. Installation is the reverse of removal.

16. Care must be taken to assure the bottom of the evaporator cover is reinstalled behind the front edge of the train trough.

17. Use sealant gum to seal any openings at rear of unit before replacing rear cover.

18. Reinstall unit taking care to level, space and secure as found.

# U-Line Corporation (U-Line) Limited Warranty

## One Year Limited Warranty

For one year from the date of original purchase, this warranty covers all parts and labor to repair or replace any part of the product that proves to be defective in materials or workmanship. For products installed and used for normal residential use, material cosmetic defects are included in this warranty, with coverage limited to 60 days from the date of original purchase. All service provided by U-Line under the above warranty must be performed by a U-Line factory authorized servicer, unless otherwise specified by U-Line. Service provided during normal business hours.

## Two Year Limited Warranty (5 Class Product)

For two years from the date of original purchase, this warranty covers all parts and labor to repair or replace any part of the product that proves to be defective in materials or workmanship. For products installed and used for normal residential use, material cosmetic defects are included in this warranty, with coverage limited to 60 days from the date of original purchase. All service provided by U-Line under the above warranty must be performed by a U-Line factory authorized servicer, unless otherwise specified by U-Line. Service provided during normal business hours.

## Available Second & Third Year Limited Warranty

In addition to the standard one and two year warranties outlined above, U-Line offers a one year extension of the warranties from the date of purchase, free of charge. To take advantage of this extension, you must register your product with U-Line within 60 days from the date of purchase at u-line.com and provide proof of purchase.

## Five Year Sealed System Limited Warranty

For five years from the date of original purchase, U-Line will repair or replace the following parts, labor not included, that prove to be defective in materials or workmanship: compressor, condenser, evaporator, drier, and all connecting tubing. All service provided by U-Line under the above warranty must be performed by a U-Line factory authorized servicer, unless otherwise specified by U-Line. Service provided during normal business hours.

## Terms

These warranties apply only to products installed in any one of the fifty states of the United States, the District of Columbia, or the ten provinces of Canada. The warranties do not cover any parts or labor to correct any defect caused by negligence, accident or improper use, maintenance, installation, service, repair, acts of God, fire, flood or other natural disasters. The product must be installed, operated, and maintained in accordance with your product's User Guide.

The remedies described above for each warranty are the only ones that U-Line will provide, either under these warranties or under any warranty arising by operation of law. U-Line will not be responsible for any consequential or incidental damages arising from the breach of these warranties or any other warranty, whether express, implied, or statutory. Some states do not allow the exclusion or limitation of incidental or consequential damages, so the above limitation or exclusion may not apply to you. These warranties give you specific legal rights, and you may also have other rights which vary from state to state.

Any warranty that may be implied in connection with your purchase or use of the product, including any warranty of *merchantability* or any warranty *fit for a particular purpose* is limited to the duration of these warranties, and only extends to five years in duration for the parts described in the section related to the five year limited warranty above. Some states do not allow limitations on how long an implied warranty lasts, so the above limitations may not apply to you.

- The warranties only apply to the original purchaser and are non-transferable.
- The second, third, and five year warranties cover products installed and used for normal residential or designated marine use only.
- The warranties apply to units operated outside only if designed for outdoor use by model and serial number.
- U-Line Commercial products are covered by the one year and 5 year limited warranties and are not eligible for the second and third year limited warranties.
- Replacement water filters, light bulbs, and other consumable parts are not covered by these warranties.
- The start of U-Line's obligation is limited to four years after the shipment date from U-Line.
- In-home instruction on how to use your product is not covered by these warranties.
- Food, beverage, and medicine loss are not covered by these warranties.
- If the product is located in an area where U-Line factory authorized service is not available, you may be responsible for a trip charge or you may be required to bring the product to a U-Line factory authorized service location at your own cost and expense.
- Units purchased after use as floor displays, and/or certified reconditioned units, are covered by the limited one year warranty only and no coverage is provided for cosmetic defects.
- Signal issues related to Wi-Fi connectivity are not covered by these warranties.

For parts and service assistance, or to find U-Line factory authorized service near you, contact U-Line:
8900 N. 55th Street, Milwaukee, WI 53223 • u-line.com • onlineservice@u-line.com • +1.414.354.0300

Copyright U-Line Corporation. All Rights Reserved. | Publication Number 30379 | 3/2024 Rev. Q