INSIGNIA™

USER GUIDE

18 Cu. Ft. Top Mount Refrigerator

NS-RTM18WH8Q/NS-RTM18WH8Q-C/
NS-RTM18BK8Q/NS-RTM18BK8Q-C

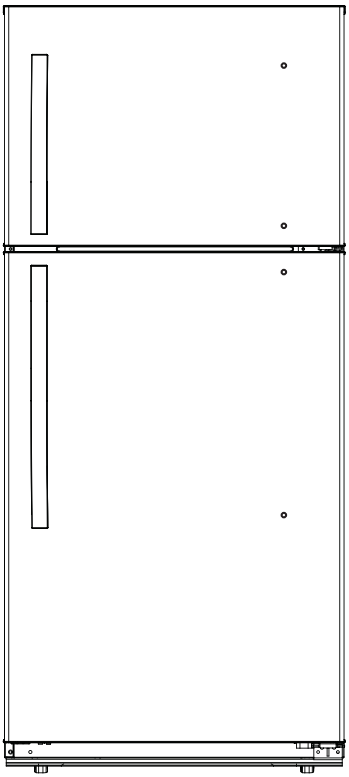

Before using your new product, please read these instructions to prevent any damage.

INSIGNIA™

Contents

Introduction 2
Important Safety Instructions 3
  Grounding requirement 5
Features 5
  Package contents 5
  Main components 6
Setting up your refrigerator 6
  Before using your refrigerator 6
  Finding a suitable location 6
  Leveling your refrigerator 7
  Providing proper ventilation 7
  Providing a proper power supply 7
  Installing the door handle 8
Using your refrigerator 9
  Setting the refrigerator temperature 9
  Setting the freezer temperature 10
  Using your freezer compartment 10
  Using your refrigerator compartment 10
Reversing the door position 11
  Preparing to reverse the door position 11
  Reversing the door position 11
Maintaining your refrigerator 18
  Changing the interior LED light 18
Shutting down your refrigerator - long vacations (several months) 19
Moving your refrigerator 19
Tips on saving energy 19
Troubleshooting 19
  Error codes 19
Specifications 22
ONE-YEAR LIMITED WARRANTY 23

Introduction

Congratulations on your purchase of a high-quality Insignia product. Your NS-RTM18WH8Q, NS-RTM18WH8Q-C, NS-RTM18BK8Q, or NS-RTM18BK8Q-C represents the state of the art in refrigerator design and is designed for reliable and trouble-free performance.

Important Safety Instructions





This symbol indicates that dangerous voltage constituting a risk of electric shock is present within your refrigerator.



This symbol indicates that there are important operating and maintenance instructions in the literature accompanying your refrigerator.

WARNING

1. Read these instructions.
2. Keep these instructions.
3. Heed all warnings.
4. Follow all instructions.
5. Do not use this appliance near water.
6. Clean only with a damp cloth.
7. Do not block any ventilation openings. Install in accordance with the manufacturer's instructions.
8. Do not install near any heat sources such as radiators, heat registers, stoves, or other apparatus (including amplifiers) that produce heat.
9. Do not defeat the safety purpose of the polarized or grounding-type plug. A polarized plug has two blades with one wider than the other. A grounding type plug has two blades and a third grounding prong. The wide blade or the third prong are provided for your safety. If the provided plug does not fit into your outlet, consult an electrician for replacement of the obsolete outlet.
10. Protect the power cord from being walked on or pinched particularly at plugs, convenience receptacles, and the point where they exit from the appliance.
11. Do not attempt to modify or extend the power cord of this appliance.
12. Unplug this appliance during lightning storms or when it will not be used for long periods of time.
13. Make sure that the available AC power matches the voltage requirements of this appliance.
14. Do not handle the plug with wet hands. This could result in an electric shock.
15. Unplug the power cord by holding the plug, never by pulling the cord.
16. Do not turn the appliance on or off by plugging or unplugging the power cord.
17. Turn off the appliance before unplugging it.

18 Refer all servicing to qualified service personnel. Servicing is required when the appliance has been damaged in any way, such as the power-supply cord or plug is damaged, liquid has been spilled or objects have fallen into the appliance, the appliance has been exposed to rain or moisture, does not operate normally, or has been dropped.

19 To reduce the risk of fire or electric shock, do not expose this appliance to rain, moisture, dripping, or splashing, and no objects filled with liquids should be placed on top of it.

WARNING

Electric Shock Hazard



Failure to follow these instructions can result in electric shock, fire, or death.

1 **WARNING**–Keep ventilation openings in the appliance clear of obstruction.

2 **WARNING**–Do not touch the interior of the freezer compartment with wet hands. This could result in frost bite.

3 **WARNING**–Do not use mechanical devices or other means to accelerate the defrosting process, other than those recommended by the manufacturer.

4 **WARNING**–Do not damage the refrigerant tubing when handling, moving, or using the refrigerator.

5 **WARNING**–Do not use electrical appliances inside the food storage compartment of the refrigerator, unless they are of the type recommended by the manufacturer.

6 **WARNING**–**DANGER**—Never allow children to play with, operate, or crawl inside the refrigerator.

Risk of child entrapment. Before you throw away your old refrigerator or freezer:

1) Take off the doors

2) Leave the shelves in place so that children may not easily climb inside

7 Unplug the refrigerator before carrying out user maintenance on it.

8 This appliance can be used by children age 8 years and older and persons with reduced physical or mental capabilities or lack of experience and knowledge if they are given supervision or instruction concerning the use of the appliance in a safe way and understand the hazards involved. Children should not play with the appliance. Cleaning and maintenance should not be performed by children without supervision.

9 If a component part is damaged, it must be replaced by the manufacturer, its service agent, or similar qualified persons in order to avoid a hazard.

10 Follow local regulations regarding disposal of the appliance due to flammable refrigerant and gas. All refrigeration products contain refrigerants, which under the guidelines of federal law must be removed before disposal. It is the consumer's responsibility to comply with federal and local regulations when disposing of this product.

11 This appliance is intended to be used in household and similar environments.

12 Do not store or use gasoline or any flammable liquids inside or in the vicinity of this refrigerator.

13 Do not use an extension cord with this appliance. If the power cord is too short, have a qualified electrician install an outlet near the appliance. Use of an extension cord can negatively affect the refrigerator's performance.

Grounding requirement

This appliance must be grounded. This appliance is equipped with a cord having a grounding wire with a grounding plug. The plug must be inserted into an outlet that is properly installed and grounded.

Improper use of the grounding plug can result in a risk of electric shock. Consult a qualified electrician or service person if the grounding instructions are not completely understood, or if doubt exists as to whether the appliance is properly grounded.

Features

- 18 cubic foot capacity
- Electronic control
- Wire shelves
- Humidity-controlled crisper drawers
- LED lighting
- Frost free

Package contents

- 18 cu. ft. top mount refrigerator
- Ice tray
- Handle kit
- Hinge kit
- User Guide

Main components

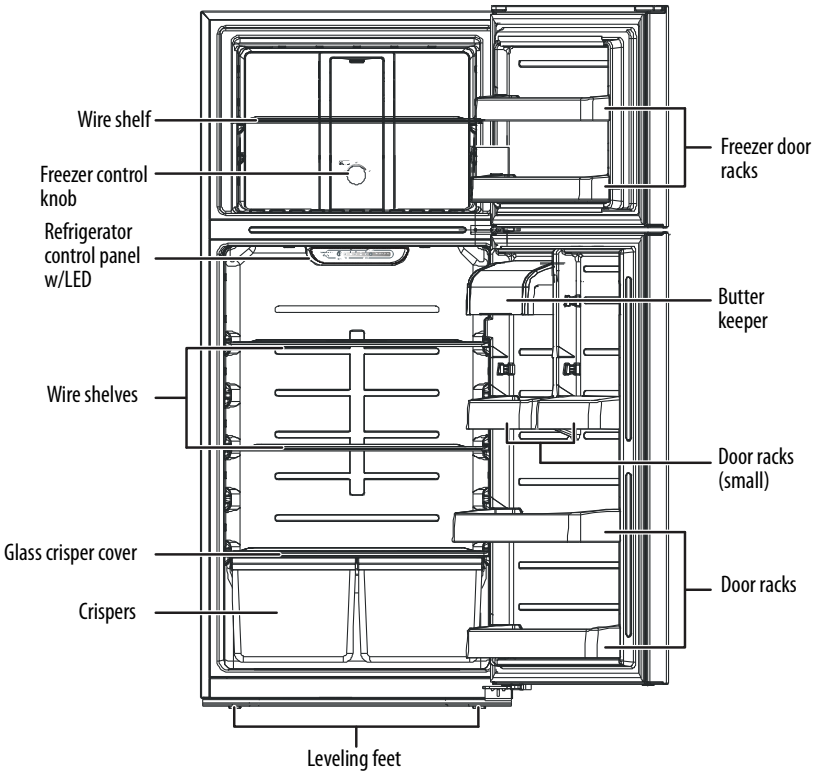

Setting up your refrigerator

Before using your refrigerator

1. Remove the interior packing.
2. Let the refrigerator stand upright for approximately four hours before connecting it to power. This reduces the possibility of a malfunction in the cooling system from improper handling during transportation.
3. Clean the interior surface with lukewarm water using a soft cloth.
4. Wait for approximately 24 hours after the thermostat has been set before placing any food in your refrigerator.

Finding a suitable location

- This refrigerator is designed to be free standing only, and should not be recessed or built-in.
- Place your refrigerator on a floor that is strong enough to support the refrigerator when it is fully loaded.

- Position the refrigerator in a location away from direct sunlight, because it may affect the acrylic coating and heat sources may increase electrical consumption. To ensure optimal performance, install in areas with an ambient temperature between 41° F (5° C) and 109° F (42.8° C).
- Avoid locating the refrigerator in moist areas.
- The refrigerator door must be able to swing fully open.

Leveling your refrigerator

- It is very important for the refrigerator to be level. If the refrigerator is not leveled during installation, the doors may not close or seal properly, causing cooling, frost, or moisture problems.
- To level your refrigerator, rotate the leveling feet clockwise (to raise) the refrigerator or counter-clockwise (to lower).

Note: Having someone push against the top of the refrigerator helps to take some weight off the leveling foot, making it easier to adjust.

Providing proper ventilation

Place the refrigerator at least five inches from the wall to ensure proper airflow to the compressor. Do not place the refrigerator near any heat sources, such as a heater or stove, as this may put a strain on the compressor.

Providing a proper power supply

Check your local power source. This refrigerator requires a 110V-120 V, 60 Hz power supply.

Use a receptacle that accepts the grounding prong. The power cord is equipped with a 3-prong (grounding) plug which mates with a standard 3-prong (grounding) wall outlet to minimize the possibility of electric shock hazard from this refrigerator.

Using a 3-prong plug and outlet

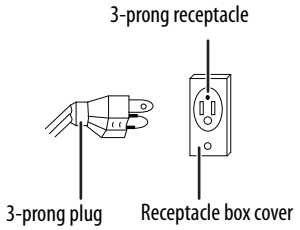

Using a grounding adapter

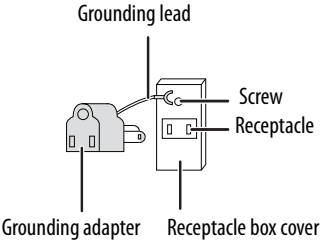

Notes:
- The refrigerator should always be plugged into its own individual electrical outlet which has a voltage rating that matches the rating plate.
- Never unplug your refrigerator by pulling on the power cord. Always grip the plug firmly and pull straight out from the outlet.

Installing the door handle

You will need: A Phillips screwdriver and the included Allen wrench.

Parts included with the handle kit:



Handle assembly



Screws (4)



Allen wrench



Allen wrench caps (4)

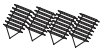

Allen wrench screws (4)

1 Insert the two Phillips-head screws into the refrigerator door on the side you prefer, then tighten.

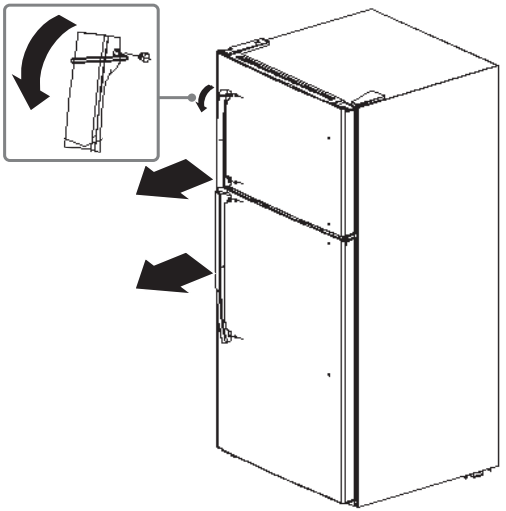

2 Align the door handle with the screws.

3 Insert the two Allen-head screws through the side of the door handle and tighten with the Allen wrench.

4 Place the screw caps on the screws.

Using your refrigerator

Setting the refrigerator temperature

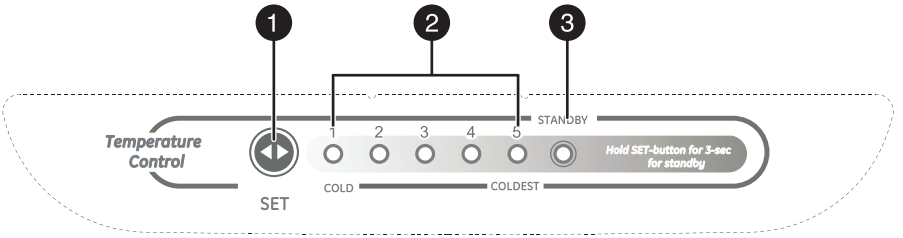

#	ITEM	DESCRIPTION
1	**SET** button	Press to change the refrigerator setting from 1 (cold) to 5 (coldest).
2	LED indicators	Light to show the current refrigerator setting.
3	STANDBY LED	Lights to indicate when the refrigerator is in standby mode (refrigerator and freezer are turned off).

- The first time you turn the refrigerator on, the control panel LEDs turn on for three seconds, then displays the current setting (default = **3**). Your refrigerator runs continuously for several hours until it reaches the preset temperature. After your refrigerator is fully cooled, you can adjust the temperature up or down to your personal preference.
- To temporarily suspend cooling in the refrigerator and freezer, press and hold the **SET** button for three seconds. The **STANDBY** LED turns on and cooling is turned off. Press the **SET** button again to cancel standby mode and resume cooling.

Notes:
- If the refrigerator is unplugged or loses power, you must wait three to five minutes before restarting it. If you attempt to restart before this time delay, the refrigerator will not start.
- Large amounts of food will lower the cooling efficiency of the refrigerator.
- If you choose to change the thermostat setting, adjust it by one increment at a time. Allow 24 hours for the temperature to stabilize between adjustments.

Setting the freezer temperature

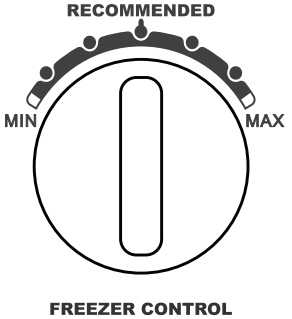

Turn the controls to adjust the freezer temperature, allow 24 hours for the freezer to adjust and stabilize.

Using your freezer compartment

- Place frozen food into the freezer as quickly as possible after purchase.
- Follow package instructions regarding storage times. The storage life of frozen foods varies and the recommended storage time should not be exceeded.

Using your refrigerator compartment

The refrigerator compartment is suitable for the storage of meat, vegetables, and fruit.

CAUTION: To prevent damage, never close the refrigerator door while the shelves or crisper drawers are extended.

Using the door racks

Door racks are suitable for the storage of eggs, canned liquids, bottled drinks, and packed food. Do not place too many heavy things in the racks.

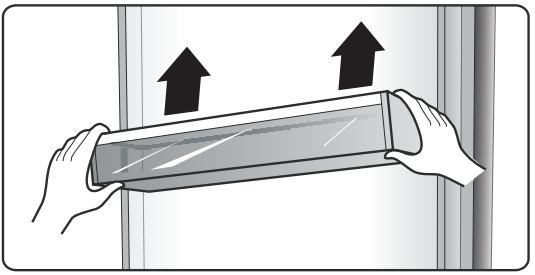

The middle door rack is adjustable and can be placed at different heights. Before adjusting, take the food out of the rack.

Using the refrigerator shelves

The two wire shelves in the refrigerator compartment can be adjusted to various heights, as needed.

To remove a shelf, lift the front of the shelf, then gently pull it forward until the shelf comes clear of the shelf guides.

When reinserting a shelf, make sure that there is nothing behind it, then gently push the shelf back into the position.

Using the crispers

Use the crisper drawers to store vegetables and fruits.

The crisper cover is used for controlling the temperature of the crisper and preventing moisture loss. Use the sliding vent to adjust humidity level inside the drawer.

In general, store fruits and vegetables that are not sensitive to moisture loss (apples, peaches, pears) in a drawer with a low humidity setting and store food that can wilt (lettuce, asparagus, carrots, strawberries) in a drawer with high humidity

To remove the crispers:

1. Empty the crisper.
2. Pull it forward, then separate it from the slide.
3. Push the slides back into place.

Reversing the door position

Based on the location where you plan to use your refrigerator, you may find it more convenient to reverse the position of the door.

CAUTION: To avoid injury to yourself or your property, we recommend that someone assist you during the door reversal process.

Preparing to reverse the door position

You will need: A standard screwdriver, a Phillips screwdriver, and the included Allen wrench.

- Make sure that your refrigerator is unplugged and empty.
- Have someone available to assist you in the process.
- Keep all of the parts you remove to reuse them later.

Reversing the door position

Parts included with the hinge kit:

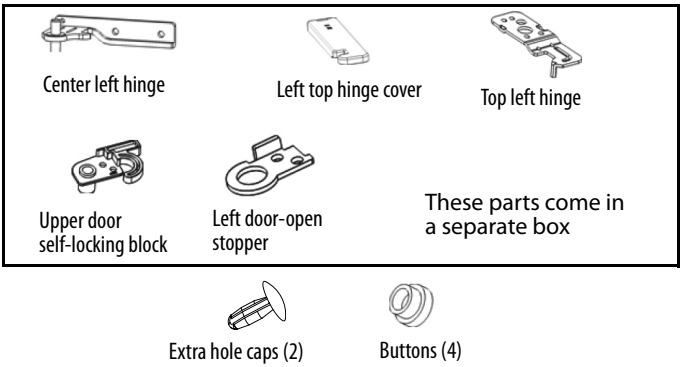

Parts already mounted on the door (as shipped):



Center right hinge



Right top hinge cover



Top right hinge



Upper door self-locking block



Right door-open stopper



Door block



Bottom hinge

Assorted screw-hole covers.

1 Unplug your refrigerator and remove all food from the door shelves.

2 Using a flat blade screwdriver, remove the left cover plate and the right top hinge cover, then unscrew and remove the right top hinge. Keep the screws to reuse.

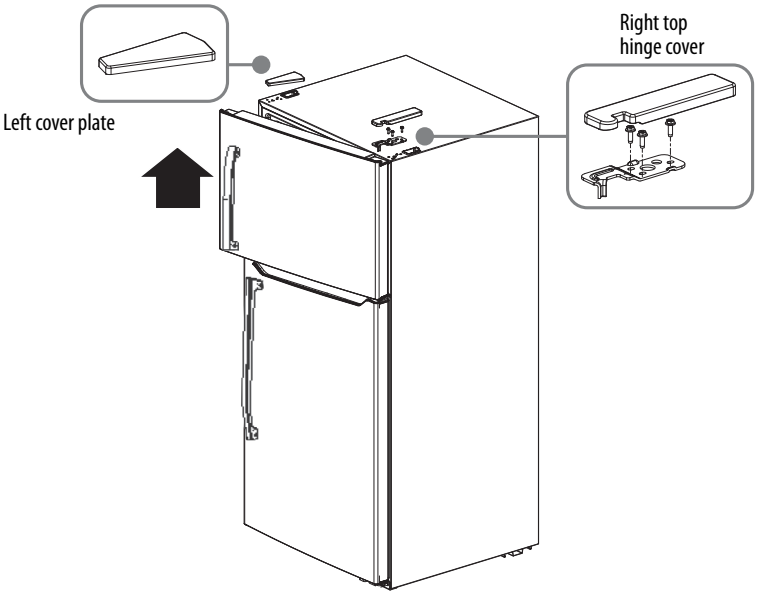

3 Lift the freezer door up and away from your refrigerator.

4 Unscrew the three screws holding the center hinge, remove the hinge, then lift the refrigerator door up and away from your refrigerator. Save the screws to reuse and store the hinge in a safe place, in case you need to reverse the door position again.

5 Remove the screw hole covers on the other side where the center hinge will be installed. Save them to be reused.

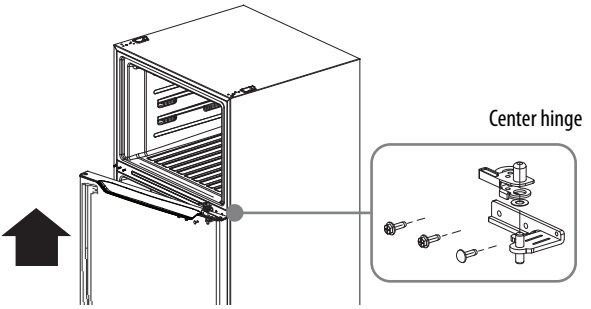

6 Unscrew the two screws holding the bottom hinge, then remove the bottom hinge from the refrigerator.

7 Remove the screw hole covers on the other side where the bottom hinge will be installed. Save them to be reused.

8 Unscrew the hinge pin from the bottom hinge and move it to the other hole in the hinge pin, then secure the bottom hinge to the left side of the refrigerator using the screws you removed previously.

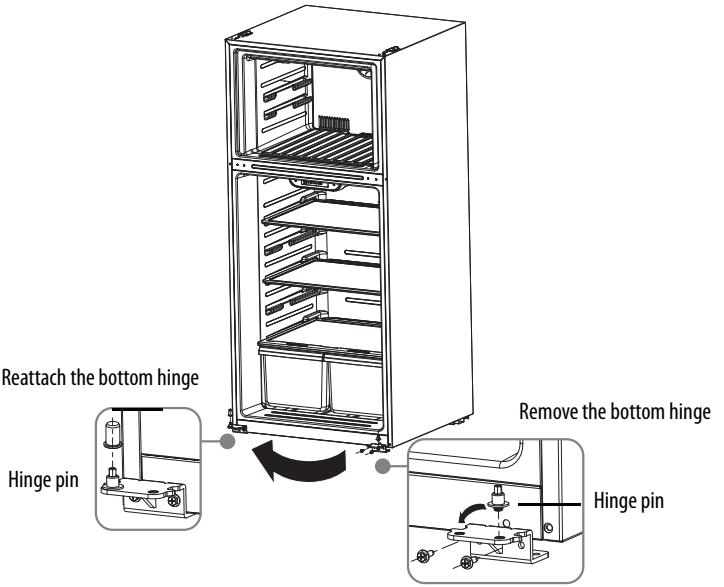

9 Remove the hole caps and plastic bushings from the top of the freezer and refrigerator doors. Save them for the next step.

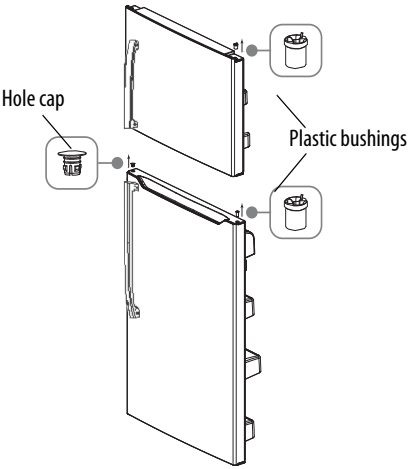

10 Insert the hole caps and plastic bushings into the opposite sides (from where you removed them) of the freezer and refrigerator doors.

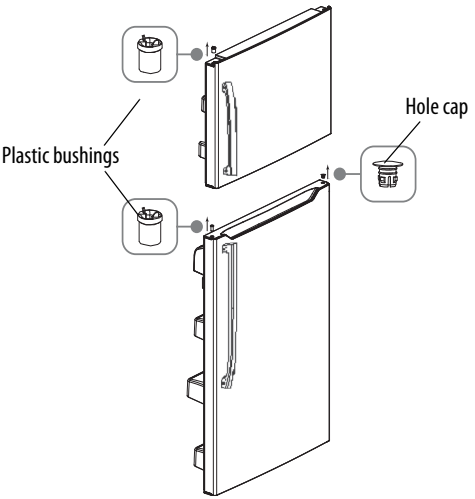

11 Remove the door block from the bottom of the refrigerator door and attach it to the other side.

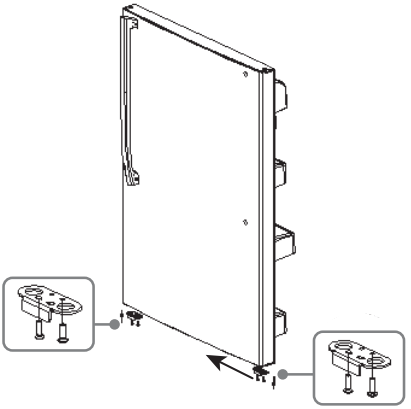

12 Attach the upper door self-locking block and the left door-open stopper to the left side of the freezer door. Use the parts from the hinge kit.

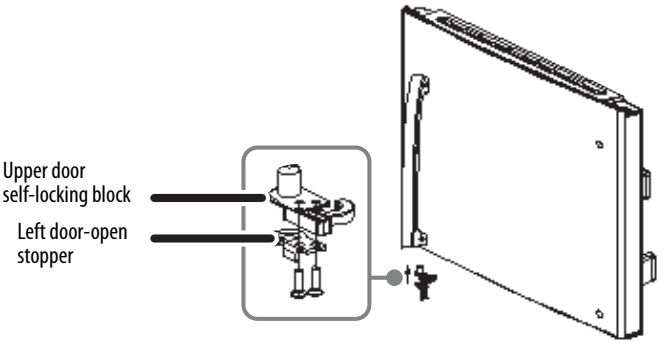

13 Remove the right upper door self-locking block and the right door-open stopper (do not remove the parts attached in step 10). Store in a safe place in case you need to reverse the door position again.

14 Attach the refrigerator door on the bottom hinge. Use the center hinge from the hinge kit (not the piece removed in step 4), then attach the center left hinge to the left side of the refrigerator.

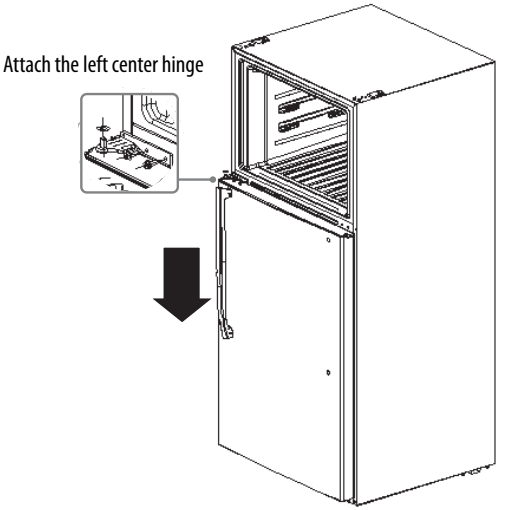

15 Put the freezer door onto the center left hinge, then attach the top left hinge (from the hinge kit) to the top of refrigerator. Cover the hinge with the top left hinge cover (from the hinge kit) and cover the screw holes on the right side of the top with the cover plate you previously removed.

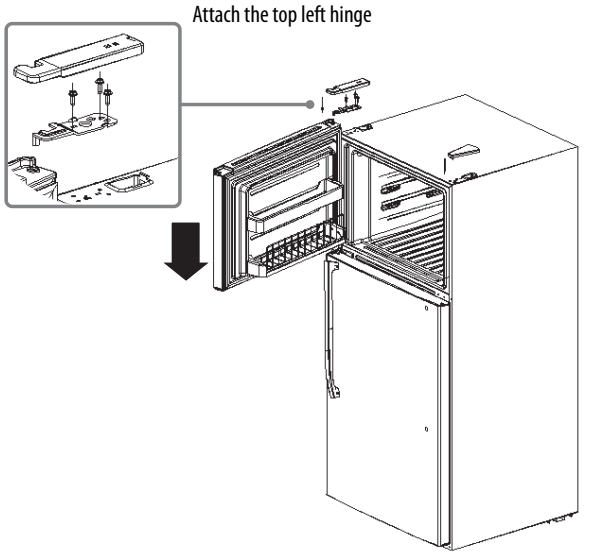

16 Remove the screw caps on the door handles, then remove the four Allen-screws with the Allen wrench. Remove the handles.

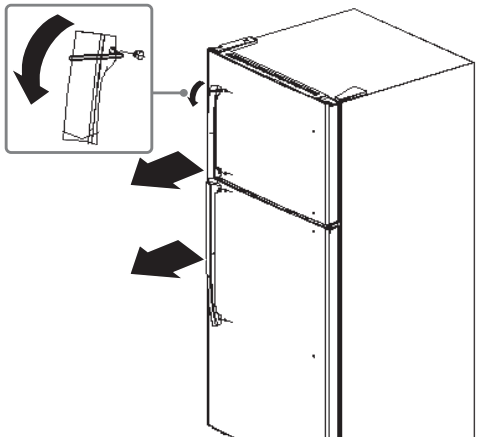

17 Remove the hole caps from right side of the door and save them to be reused.

18 Remove the four Phillips-head screws from the left side of the door and install them into the holes on the right side of the door.

19 Attach the handles to the right sides of doors with the Allen-head screws you just removed. Tighten with the Allen wrench and replace the screw caps.

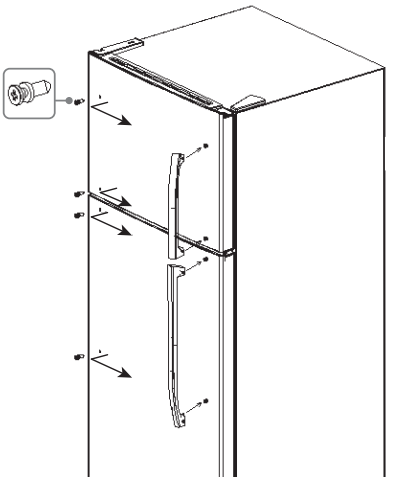

20 Install the hole caps you removed from right side of the door into the left side of the door.

Maintaining your refrigerator

Your refrigerator is designed for year-round use with only minimal cleaning and maintenance.

When you first receive it, wipe the cabinet with a mild detergent and warm water, then wipe dry with a dry cloth. Do this periodically to keep your refrigerator looking new.

CAUTION:
To prevent damage to the finish, do not use:
- Gasoline, benzine, thinner, or other similar solvents.
- Abrasive cleaners.

1. Turn off the refrigerator and unplug it from the wall outlet.
2. Remove all food.
3. Wash the inside with a damp warm cloth soaked in a solution of one quart of lukewarm water to two tablespoons of baking soda solution.
4. Be sure to keep the door gasket (seal) clean to keep the refrigerator running efficiently.
5. Dry the interior and exterior with a soft cloth.

Defrosting the freezer

This refrigerator is frost free, so you don't need to defrost it. You just need to clean it periodically, following the above instructions.

Changing the interior LED light

1. Using a Phillips screwdriver, remove the screw securing the lamp cover, then remove the lamp cover.

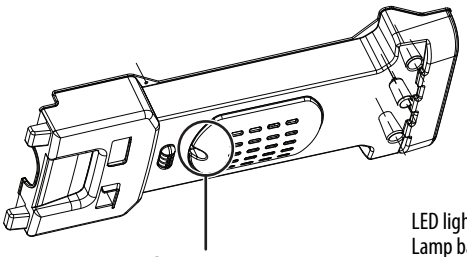

LED light model: 50241001001C
Lamp base: E12
Input rating: 115 V AC 3.5 W

2. Remove the LED light bulb from the lamp base, then install a new LED light bulb.
3. Reinstall the lamp cover with the screw you previously removed.

Shutting down your refrigerator - long vacations (several months)

1. Turn off the refrigerator and unplug it from the wall outlet.
2. Remove all food.
3. Clean the refrigerator.
4. Leave the door open slightly to avoid possible formation of condensation, mold, or odor.

CAUTION: Use extreme caution with children. The refrigerator should not be accessible to child's play.

Moving your refrigerator

1. Turn off the refrigerator and unplug it from the wall outlet.
2. Remove all food.
3. Securely tape down all loose items inside your refrigerator.
4. Tape the doors shut.
   Be sure the refrigerator stays in the upright position during transportation.

Tips on saving energy

- Locate your refrigerator in the coolest area of the room, away from heat producing appliances or heating ducts and out of the direct sunlight.
- Let hot foods cool before placing them in the refrigerator. Overloading the refrigerator forces the compressor to run longer. Foods that freeze too slowly may lose quality or spoil.
- Wrap foods properly and wipe containers dry before placing them in the refrigerator. This cuts down on frost build-up inside the refrigerator.
- Organize and label food to reduce door openings and extended searches.

Obtaining replacement parts

Call Insignia Customer Service at 1-877-467-4289.

Troubleshooting

CAUTION: Do not try to repair your refrigerator yourself. Doing so invalidates the warranty.

Error codes

LED DISPLAY	PROBLEM
LED 1 and LED 2 lit	Temperature sensor circuit
LED 1 and LED 3 lit	Freezer defrost sensor
LED 1 and LED 4 lit	Ambient temperature sensor

PROBLEM	POSSIBLE CAUSE	POSSIBLE SOLUTION
The refrigerator does not operate	The refrigerator is unplugged.	Make sure that the refrigerator is plugged in and that the plug is pushed completely into the outlet.
	The thermostat is set to the STANDBY position.	Press the SET button until LED 3 lights.
	The fuse on the circuit is blown or the circuit breaker is tripped.	Check the house fuse/circuit breaker box and replace the fuse or reset the circuit breaker.
	Power failure.	If a power failure occurs, the refrigerator turns off. Wait until the power is restored.
The compressor turns on and off frequently	The door has been opened too often or was not closed properly. The door seal may be dirty.	Make sure that the door is closed properly. Clean the door seal if necessary.
	The room temperature is hotter than normal.	This is normal, under the circumstances.
	A large amount of food was recently added to the refrigerator.	This is normal, under the circumstances.
	The thermostat is not set correctly.	Reset the thermostat correctly.
	The refrigerator does not have the correct clearances.	The refrigerator should be no closer than five inches from the adjacent walls.
	The refrigerator has recently been disconnected for a period of time.	Allow four hours for the refrigerator to cool down completely.
Food in the refrigerator compartment is freezing	The thermostat is set too cold.	Set the thermostat to a warmer setting.

PROBLEM	POSSIBLE CAUSE	POSSIBLE SOLUTION
Food in the refrigerator compartment is not cold	The door has been opened too often or was not closed properly.	Make sure that the door is closed properly.
	You have just added a large amount of food to the refrigerator or freezer compartments.	Allow time for the new food to cool, then check again.
	The thermostat is set too warm.	Adjust the thermostat to a colder setting.
	The door gasket does not seal properly.	Clean the gasket.
	The refrigerator has recently been disconnected for a period of time.	Allow four hours for the refrigerator to cool completely.
The refrigerator makes unusual noises.	The refrigerator may not be level on the floor.	Level the refrigerator with the leveling feet.
	The body of the refrigerator is touching a wall.	Move the refrigerator out from the wall.
Moisture is building up in the interior of the refrigerator	The door has been opened too often or was not closed properly.	Make sure that the door is closed properly.
	The refrigerator is in a location that is very humid.	Move the refrigerator to a dryer location.
	The food in the refrigerator is not packaged properly.	Repackage the food in the refrigerator to make sure that it is sealed.
The refrigerator door does not close completely	Food packages are interfering with the door.	Move the food packages or remove some food.
	The shelves are out of position.	Adjust the shelves properly.
	The door gaskets are dirty.	Clean the door gaskets.
	The refrigerator is not level.	Level the refrigerator with the leveling feet.
The exterior of the refrigerator is warm	This is normal.	

PROBLEM	POSSIBLE CAUSE	POSSIBLE SOLUTION
There is a popping or crackling sound when the compressor comes on	This is normal.	The sound should level off or disappear as the refrigerator continues to run.
There is a bubbling or gurgling sound, like water boiling	This is normal.	
Vibrations	The refrigerator is not on a level or sturdy surface.	Make sure that the refrigerator is on a level, sturdy surface. Level the refrigerator with the leveling legs.
	The refrigerator may be touching a wall.	Make sure that the refrigerator is not touching a wall.
There is moisture forming on the external walls of the refrigerator	The door may be slightly open.	Make sure that the door closes completely.

Specifications

Dimensions (WxDxH)	29.5 x 32.8 x 66.6 in.(75 x 83.3 x 169.2 cm)
Weight	165.3 lbs (75 kg)
Power requirements	115 V~60 Hz
Current	1.2 A
Power consumption (annual)	398 kWh

ONE-YEAR LIMITED WARRANTY

Definitions:

The Distributor* of Insignia branded products warrants to you, the original purchaser of this new Insignia-branded product ("Product"), that the Product shall be free of defects in the original manufacturer of the material or workmanship for a period of one (1) year from the date of your purchase of the Product ("Warranty Period").

For this warranty to apply, your Product must be purchased in the United States or Canada from a Best Buy branded retail store or online at www.bestbuy.com or www.bestbuy.ca and is packaged with this warranty statement.

How long does the coverage last?

The Warranty Period lasts for 1 year (365 days) from the date you purchased the Product. Your purchase date is printed on the receipt you received with the Product.

What does this warranty cover?

During the Warranty Period, if the original manufacture of the material or workmanship of the Product is determined to be defective by an authorized Insignia repair center or store personnel, Insignia will (at its sole option): (1) repair the Product with new or rebuilt parts; or (2) replace the Product at no charge with new or rebuilt comparable products or parts. Products and parts replaced under this warranty become the property of Insignia and are not returned to you. If service of Products or parts are required after the Warranty Period expires, you must pay all labor and parts charges. This warranty lasts as long as you own your Insignia Product during the Warranty Period. Warranty coverage terminates if you sell or otherwise transfer the Product.

How to obtain warranty service?

If you purchased the Product at a Best Buy retail store location or from a Best Buy online website (www.bestbuy.com or www.bestbuy.ca), please take your original receipt and the Product to any Best Buy store. Make sure that you place the Product in its original packaging or packaging that provides the same amount of protection as the original packaging.

To obtain warranty service, in the United States and Canada call 1-877-467-4289. Call agents may diagnose and correct the issue over the phone.

Where is the warranty valid?

This warranty is valid only in the United States and Canada at Best Buy branded retail stores or websites to the original purchaser of the product in the country where the original purchase was made.

What does the warranty not cover?

This warranty does not cover:

- Food loss/spoilage due to failure of refrigerator or freezer
- Customer instruction/education
- Installation
- Set up adjustments
- Cosmetic damage
- Damage due to weather, lightning, and other acts of God, such as power surges
- Accidental damage
- Misuse
- Abuse
- Negligence
- Commercial purposes/use, including but not limited to use in a place of business or in communal areas of a multiple dwelling condominium or apartment complex, or otherwise used in a place of other than a private home.
- Modification of any part of the Product, including the antenna
- Display panel damaged by static (non-moving) images applied for lengthy periods (burn-in).

- Damage due to incorrect operation or maintenance
- Connection to an incorrect voltage or power supply
- Attempted repair by any person not authorized by Insignia to service the Product
- Products sold “as is” or “with all faults”
- Consumables, including but not limited to batteries (i.e. AA, AAA, C etc.)
- Products where the factory applied serial number has been altered or removed
- Loss or Theft of this product or any part of the product
- Display panels containing up to three (3) pixel failures (dots that are dark or incorrectly illuminated) grouped in an area smaller than one tenth (1/10) of the display size or up to five (5) pixel failures throughout the display. (Pixel based displays may contain a limited number of pixels that may not function normally.)
- Failures or Damage caused by any contact including but not limited to liquids, gels or pastes.

REPAIR REPLACEMENT AS PROVIDED UNDER THIS WARRANTY IS YOUR EXCLUSIVE REMEDY FOR BREACH OF WARRANTY. INSIGNIA SHALL NOT BE LIABLE FOR ANY INCIDENTAL OR CONSEQUENTIAL DAMAGES FOR THE BREACH OF ANY EXPRESS OR IMPLIED WARRANTY ON THIS PRODUCT, INCLUDING, BUT NOT LIMITED TO, LOST DATA, LOSS OF USE OF YOUR PRODUCT, LOST BUSINESS OR LOST PROFITS. INSIGNIA PRODUCTS MAKES NO OTHER EXPRESS WARRANTIES WITH RESPECT TO THE PRODUCT, ALL EXPRESS AND IMPLIED WARRANTIES FOR THE PRODUCT, INCLUDING BUT NOT LIMITED TO ANY IMPLIED WARRANTIES OF AND CONDITIONS OF MERCHANTABILITY AND FITNESS FOR A PARTICULAR PURPOSE, ARE LIMITED IN DURATION TO THE WARRANTY PERIOD SET FORTH ABOVE AND NO WARRANTIES, WHETHER EXPRESS OR IMPLIED, WILL APPLY AFTER THE WARRANTY PERIOD. SOME STATES, PROVINCES AND JURISDICTIONS DO NOT ALLOW LIMITATIONS ON HOW LONG AN IMPLIED WARRANTY LASTS, SO THE ABOVE LIMITATION MAY NOT APPLY TO YOU. THIS WARRANTY GIVES YOU SPECIFIC LEGAL RIGHTS, AND YOU MAY ALSO HAVE OTHER RIGHTS, WHICH VARY FROM STATE TO STATE OR PROVINCE TO PROVINCE.

Contact Insignia:

1-877-467-4289

www.insigniaproducts.com

INSIGNIA is a trademark of Best Buy and its affiliated companies.

*Distributed by Best Buy Purchasing, LLC

7601 Penn Ave South, Richfield, MN 55423 U.S.A.

©2021 Best Buy. All rights reserved.

INSIGNIA™

www.insigniaproducts.com
1-877-467-4289 (U.S. and Canada)

INSIGNIA is a trademark of Best Buy and its affiliated companies.
Distributed by Best Buy Purchasing, LLC
7601 Penn Ave South, Richfield, MN 55423 U.S.A.
©2021 Best Buy. All rights reserved.

V7 ENGLISH
21-0771