S/M No.: F R S 5 1 0 0 0 0 2

Service Manual

Refrigerator

FN-510DW

FR-650NT..
FN-650NT..



FACTORY MODEL : FRP-512..

FR-650NW..
FN-650NW..



FACTORY MODEL : FRP-513..

FR-651NT..
FN-651NT..



FACTORY MODEL : FRP-514..

FN-510DW
FN-651NW
FR-651NW..



FACTORY MODEL : FRP-515..

✔ Caution

FN-651NW same as FN510DW

In this manual, some parts can be changed for improving their performance without notice. So, If you need the latest parts information, please visit and refer to PPL (Parts Price List)] in Service Infromation Center. (http://svc.dwe.co.kr)

Sep. 2011.

Downloaded from www.Manualslib.com manuals search engine

CONTENTS

WARNINGS AND PRECAUTIONS FOR SAFETY ---------- 2

1. SPECIFICATION ---------- 3

2. NAME OF EACH PART ---------- 4

3. COLD AIR CIRCULATION ---------- 6

4. WIRING DIAGRAM ---------- 7

5. PCB CIRCUIT DIAGRAM ---------- 8

6. HOW TO REPLACE THE PARTS ---------- 9

7. PCB CONTROL FUNCTION ---------- 19

8. EXPLODE VIEW AND PARTS LIST ---------- 27

Downloaded from www.Manualslib.com manuals search engine

WARNINGS AND PRECAUTIONS FOR SAFETY

Please observe the following safety precautions in order to use safely and correctly the refrigerator and to prevent accident and danger during repair.

1. Be care of an electric shock. Disconnect power cord from wall outlet and wait for more than three minutes before replacing PCB parts.
   Shut off the power whenever replacing and repairing electric components.

2. When connecting power cord, please wait for more than five minutes after power cord was disconnected from the wall outlet.

3. Please check if the power plug is pressed down by the refrigerator against the wall.
   If the power plug was damaged, it may cause fire or electric shock.

4. If the wall outlet is over loaded, it may cause fire.
   Please use its own individual electrical outlet for the refrigerator.

5. Please make sure the outlet is properly earthed, particularly in wet or damp area.

6. Use standard electrical components when replacing them.

7. Make sure the hook is correctly engaged.
   Remove dust and foreign materials from the housing and connecting parts.

8. Do not fray, damage, machine, heavily bend, pull out or twist the power cord.

9. Please check the evidence of moisture intrusion in the electrical components.
   Replace the parts or mask it with insulation tapes if moisture intrusion was confirmed.

10. Do not let the customers repair, disassemble and reconstruct the refrigerator for themselves.
    It may cause accident, electric shock, or fire.

11. Do not store flammable materials such as ether, benzene, alcohol, chemicals, gas, or medicine in the refrigerator.

12. Do not put flower vase, cup, cosmetics, chemicals, etc., or container with full of water on the top of the refrigerator.

13. Do not put glass bottles with full of water into the freezer.
    The contents shall freeze and break the glass bottles.

14. When you scrap the refrigerator, please disconnect the door gasket first and scrap it where children are not accessible.

Downloaded from www.Manualslib.com manuals search engine

1. SPECIFICATION

Item		Specification
ISO Gross Volume (Li)	Total	**525 Li**
	Freezer Compartment	**163 Li**
	Fresh Food Compartment	**362 Li**
ISO Storage Volume (Li)	Total	**492 Li**
	Freezer	**142 Li**
	Refrigerator	**350 Li**
Weight	Non dispenser model	**84Kg**
	Dispenser model	**85Kg**
External Dimension (Width x Depth x Height)	Non dispenser model	**768 mm X 732 mm X 1770 mm**
	Dispenser model	**768 mm X 744 mm X 1770 mm**

Downloaded from www.Manualslib.com manuals search engine

2. Name Of Each Part

Non Dispenser Model

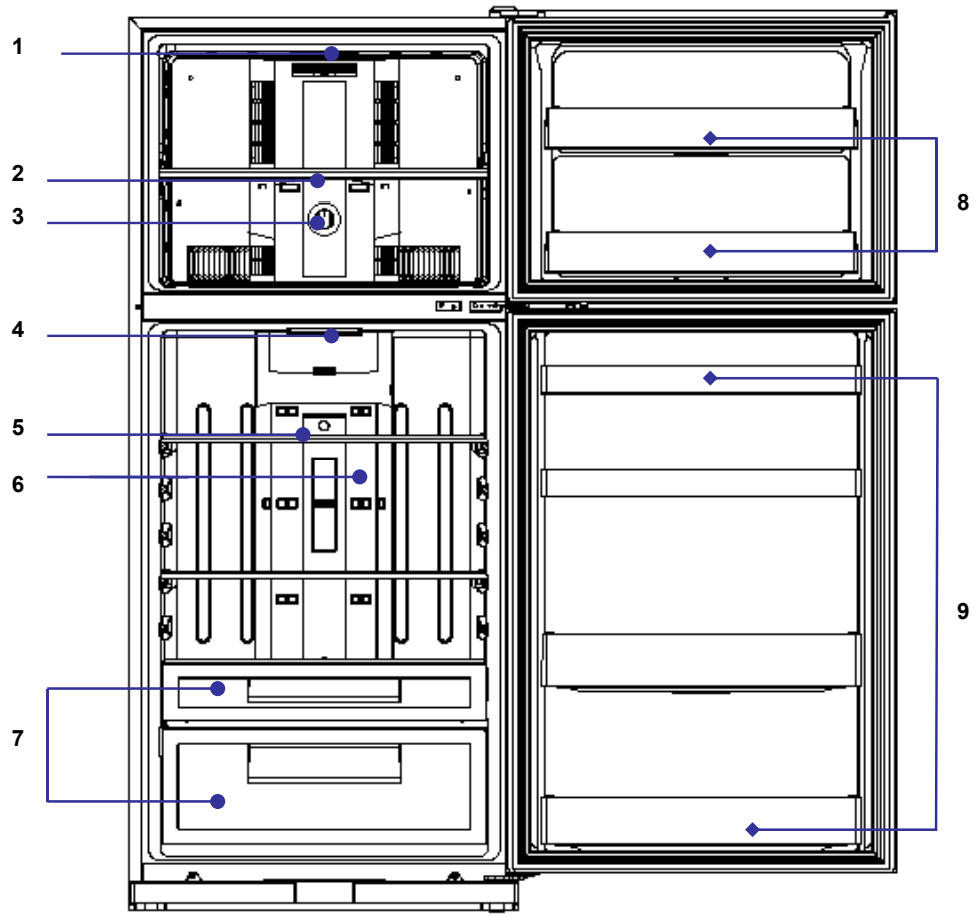

1. Freezer Compartment LED Lamp	6. Fresh Food Compartment Sensor
2. Freezer Compartment Shelf	7. Vegetable Case
3. Freezer Compartment Temperature Controller	8. Freezer Compartment Pockets
4. Fresh Food Compartment LED Lamp	9. Fresh Food Compartment Pockets
5. Fresh Food Compartment Shelves	

Downloaded from www.Manualslib.com manuals search engine

Dispenser Model

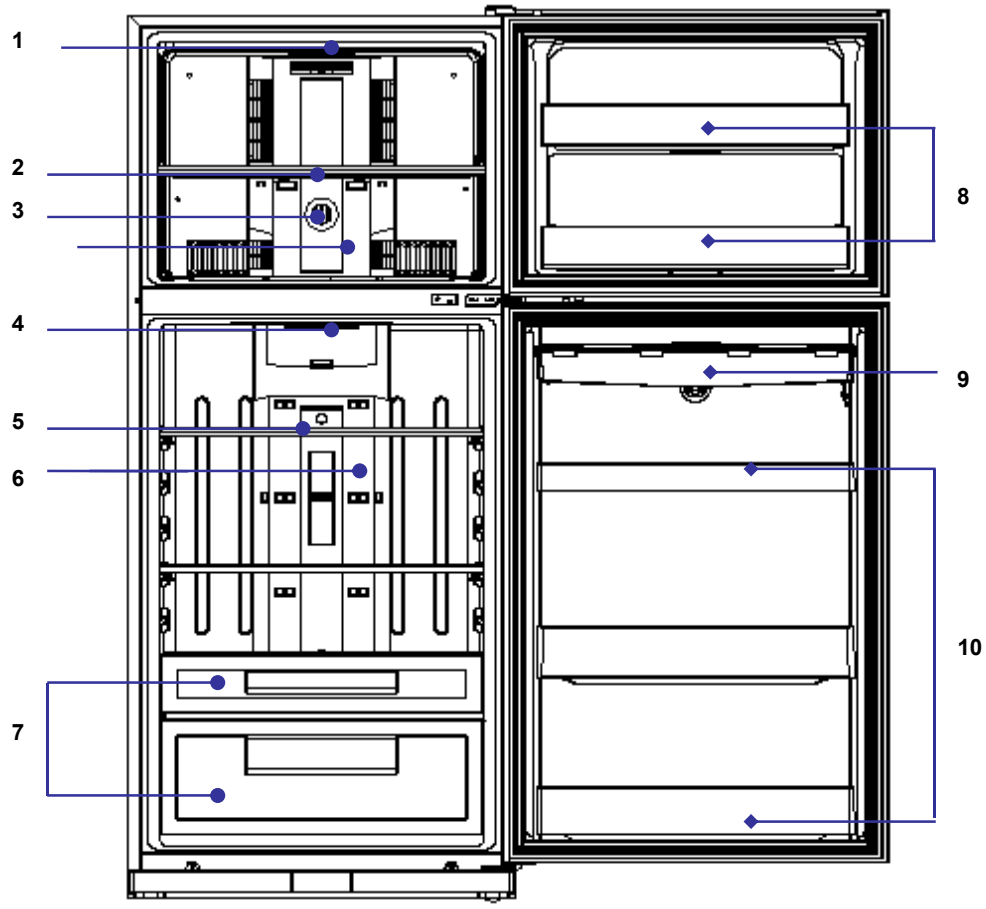

1. Freezer Compartment LED Lamp	6. Fresh Food Compartment Sensor
2. Freezer Compartment Shelf	7. Vegetable Case
3. Freezer Compartment Temperature Controller	8. Freezer Compartment Pockets
4. Fresh Food Compartment Lamp	9. Water Tank
5. Fresh Food Compartment Shelves	10. Fresh Food Compartment Pockets

Downloaded from www.Manualslib.com manuals search engine

3. Cold Air Circulation

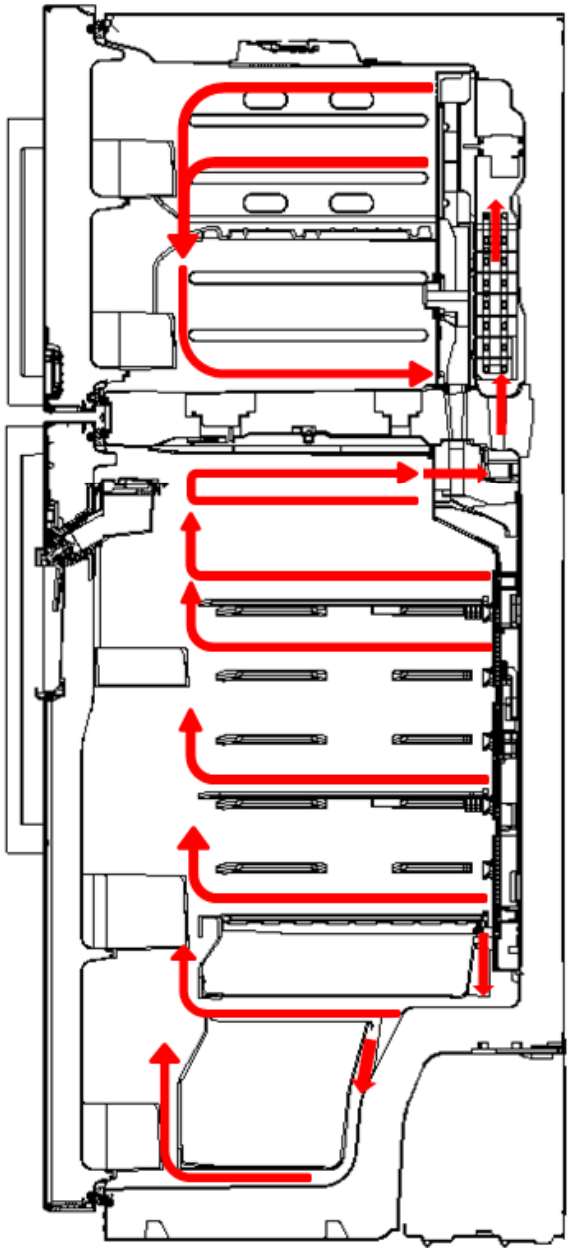

Downloaded from www.Manualslib.com manuals search engine

4. Wiring Diagram

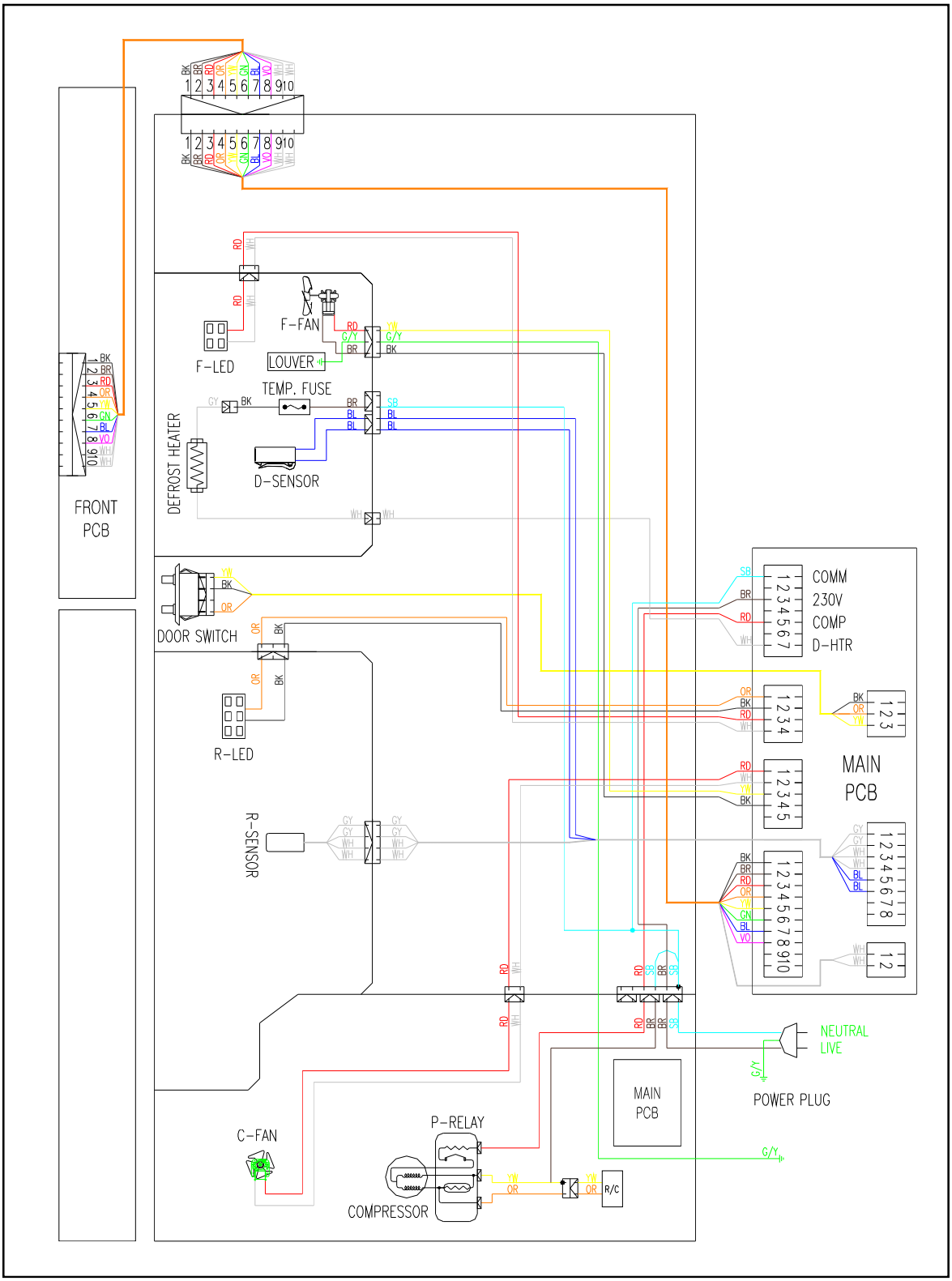

Downloaded from www.Manualslib.com manuals search engine

5. PCB CIRCUIT DIAGRAMS

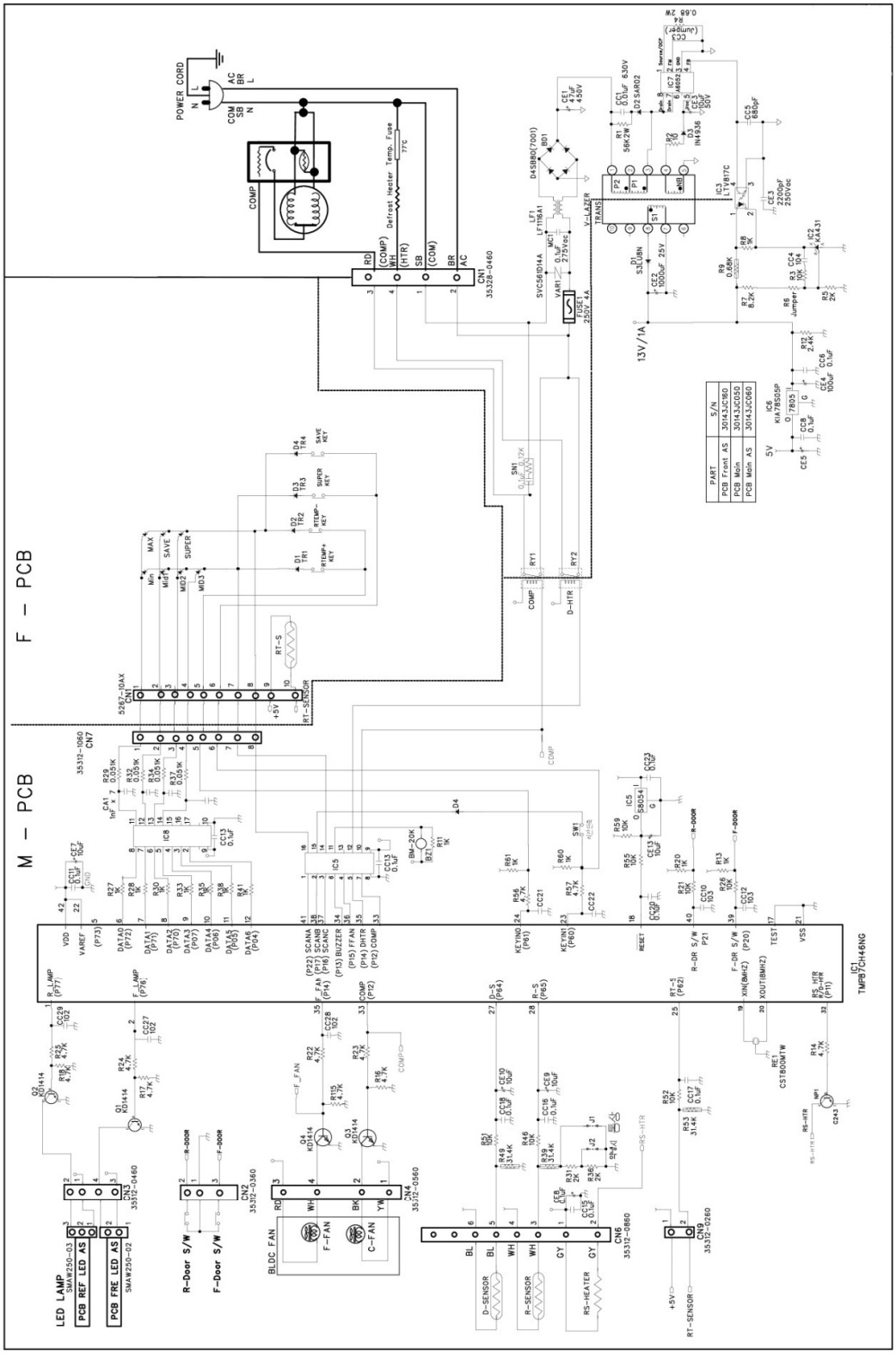

Downloaded from www.Manualslib.com manuals search engine

6. How To Replace The Parts

6-1. Freezer Louver Part

No	Photos	Description
1		- Remove ‘Freezer Shelf’ at first.
2		- Remove 4 screws on ‘Freezer Louver’.
3		- Pull forward the ‘Freezer Louver’. - Then disconnect ‘Freezer Motor’.
4	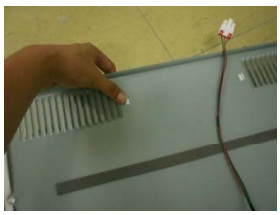 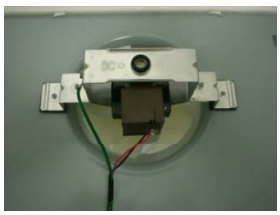	- Disassemble the ‘Cover Fan F AS’. - Be careful not to damage the hook.

Downloaded from www.Manualslib.com manuals search engine

6-2. Cover Fan F As

No	Photos	Description
1	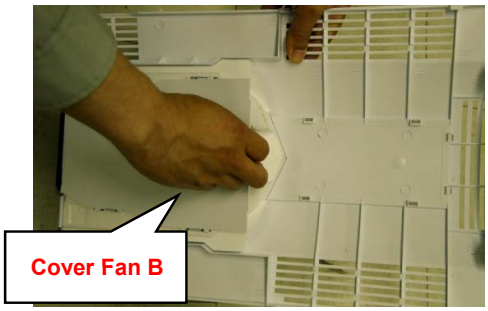	- Remove ‘Cover Fan B’.
2		- Replace ‘Knob F Control’.

Downloaded from www.Manualslib.com manuals search engine

6-3. Freezer Motor As

No	Photos	Description
1	  	- Remove 2 screws. - Remove Clamp Fan with pliers and then disassemble 'Fan' with (-) driver. - Unscrew the earth wire bolt.
2		- Remove the screws holding the bracket.
3		- Now disassemble the 'Freezer Motor'.

Downloaded from www.Manualslib.com manuals search engine

6-4. Evaporator

No	Photos	Description
1		- Remove the screw which fixes evaporator.
2		- Pull forward the evaporator and pipes. - Be careful not to bend the pipes.
3	**Defrost Heater** 	**< Defrost Heater >** - Disconnect ‘Defrost Heater’ lead wire on the right. - Disconnect ‘Temperature Fuse’ lead wire and ‘Defrost Sensor’ lead wire on the left. - Disassemble the ‘Defrost Heater’.

Downloaded from www.Manualslib.com manuals search engine

6-5. M/Flow-Duct

No	Photos	Description
1	 	- Remove 'Deco M/F Duct' with (-) driver. - Remove 'Cover sensor' with (-) driver.
2		- Disconnect 'R Senosr ' lead wire.
3		- Remove the screws on the ' Cover M/F Duct'.
4	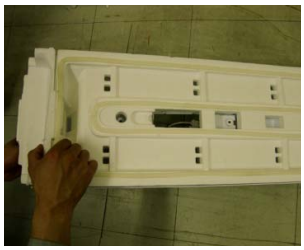	- Separate Cover M/F Duct with Insulator.
5		- Disassemble the R 'Sensor '

Downloaded from www.Manualslib.com manuals search engine

6-6. LED Lamps

Freezer compartment LED lamp

No	Photos	Description
1		- Remove 'Freezer Lamp Window'. - Be careful not to damage the hook.
2		- Unlock the hook on the side of 'Fixture lamp' and disassemble the LED lamp. - Disconnect 'LED Lamp' lead wire.

Fresh Food compartment LED lamp

No	Photos	Description
1		- Remove 'Refrigerator Lamp Window'. - Remove the screw on the LED lamp.
2		- Unlock the hook on the side of 'Fixture lamp' and disassemble the LED lamp. - Disconnect 'LED Lamp' lead wire.

Downloaded from www.Manualslib.com manuals search engine

6-7. Handle Installation

No	Photos	Description
1	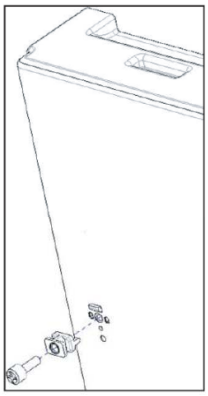 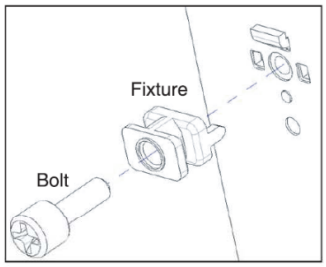	- Attach the 'Fixture' on the cabinet and Screw the bolt.
2	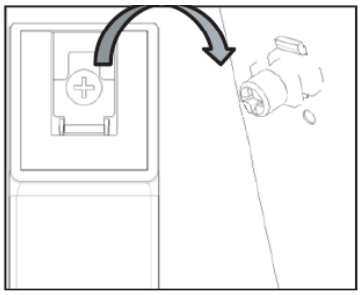  	- Align door handle with fixture and pull the handle down (Be careful the direction)
3	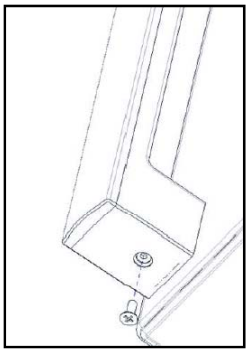	- Fasten the screw in the hold of handle.

Downloaded from www.Manualslib.com manuals search engine

6-8. Front PCB

No	Photos	Description
1		- Unlock the hook on the botton of the ‘Front PCB ‘ with (-) driver.
2		- Disassemble the ‘Front PCB’.
3	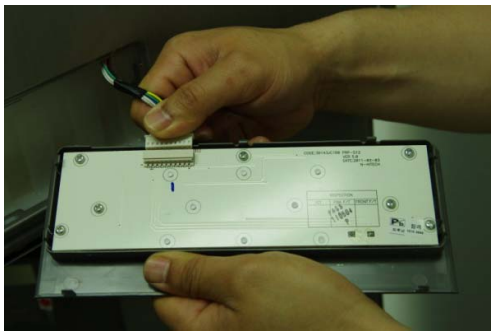	- Disconnect ‘Front PCB‘ lead wire.

Downloaded from www.Manualslib.com manuals search engine

6-9. MAIN PCB

No	Photos	Description
1		-Remove the screws and disassemble the 'Grille As'.
2		- Remove the screws and disassemble the 'Box Main PCB As'.
3	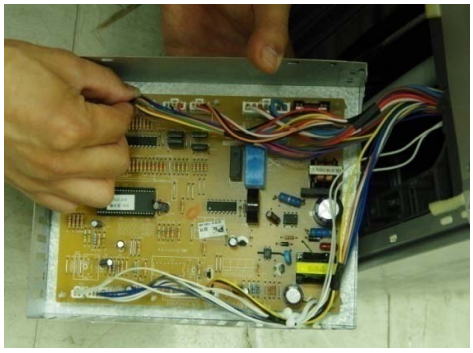	- Disconnect Hosings on the 'Main PCB'.

Downloaded from www.Manualslib.com manuals search engine

6-10. Water Dispenser

No	Photos	Description
1	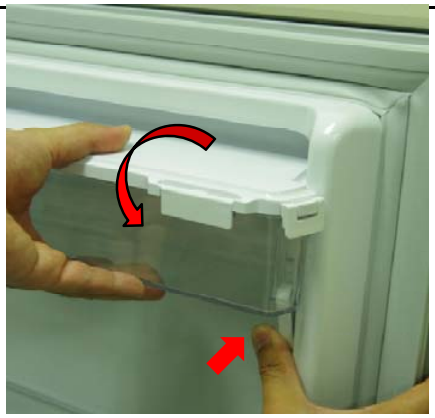	- Push the ‘Stopper Water Tank‘, then pull and remove the ‘Water Tank As’.
2		- Remove the screws on the bottom of ‘Panel Dispns As’.
3		- Disassemble the ‘Panel Dispns As’.

Downloaded from www.Manualslib.com manuals search engine

7. PCB CONTROL FUNCTION

7-1. DISPLAY

INPUT	CONTROL OBJECT
● PCB Control Panel Buttons	● PCB Control Panel LED



REFERENCE PAGE

	LED DISPLAY	FUNCTION	OPERATION
17	LED "3" on	TEMP STEP "3"	Control by pushing "UP","DOWN" button
	LED "4" on	TEMP STEP "4"	Control by pushing "UP","DOWN" button
	LED "5" on	TEMP STEP "5"	Control by pushing "UP","DOWN" button
	LED "1" on	TEMP STEP "1"	Control by pushing "UP","DOWN" button
	LED "2" on	TEMP STEP "2"	Control by pushing "UP","DOWN" button
	LED "S-COOL" on	TEMP S-COOL	Push "S-COOL" button 1 time.
	LED "SAVE" on	TEMP SAVE	Push "SAVE" button 1 time.
23	"3" flickeringly	ERROR "R SENSOR" (R1)	<How to enter Error Mode> Push "UP" button for continuously and "DOWN" button 5 times. If there is no error (normal), "4" and "5" LED flickers. *The Priorities of Error : R SENSOR> RT SENSOR> DR S/W> CYCLE> DEFROST
	"2" flickeringly	ERROR "RT SENSOR" (RT)	
	"1" flickeringly	ERROR "D SENSOR" (D1)	
	"2" & "3" flickeringly	ERROR "DOOR S/W" (DR)	
	"1" & "3" flickeringly	ERROR "CYCLE" (C1)	
	"1" & "2" flickeringly	ERROR "DEFROST" (F3)	
18	"3" & "S-COOL" on, "4" & "5" flickeringly	Forced Defrost Test	Push "UP" button for continuously and "S-COOL" button 5 times. <Display> Push "UP" button for continuously and "DOWN" button 5 times.
21	"1" & "S-COOL" on "4" & "5" flickeringly	Short Circuit Test (Pull Down Test)	Push "SAVE" button for continuously and "DOWN" button 10 times. <Display> Push "UP" button for continuously and "DOWN" button 5 times.

Downloaded from www.Manualslib.com manuals search engine

7-2. Temperature Control of Refrigerator Compartment

INPUT	CONTROL OBJECT
● PCB Control Panel “TEMP” Buttons ● R-sensor	● PCB Control Panel LED ● COMPRESSOR, FAN

A. “TEMP UP, DOWN” Button

ⓐ Temperature control of Refrigerator compartment

ⓑ 5 step mode of successive temperature mode

ⓒ Initial mode by power input: step “3”

ⓓ Temperature will be set if the button doesn’t get pressed again within 5 sec.

※ Whenever pressing “UP” button, setting is repeated in the order of
“1” → “2” → “3” → “4” → “5” (LED LAMP ON)

※ Whenever pressing “DOWN” button, setting is repeated in the order of
“5” → “4” → “3” → “2” → “1” (LED LAMP ON)

B. Temperature of Refrigerator Control

ⓐ COMP and FAN will be controlled by the on/off condition of each mode.

ⓑ Temperature Difference of Refrigerator each step :

Temperature Step	“1”	“2”	“3”	“4”	“5”
Temp. Diff. of Each Step	1.0°C	1.0°C	1.0°C	1.0°C	

ⓒ Temperature of Refrigerator at step “3” OFF point: 1.8°C

ⓓ Refrigerator ON/OFF Temp. Difference: 0.7°C

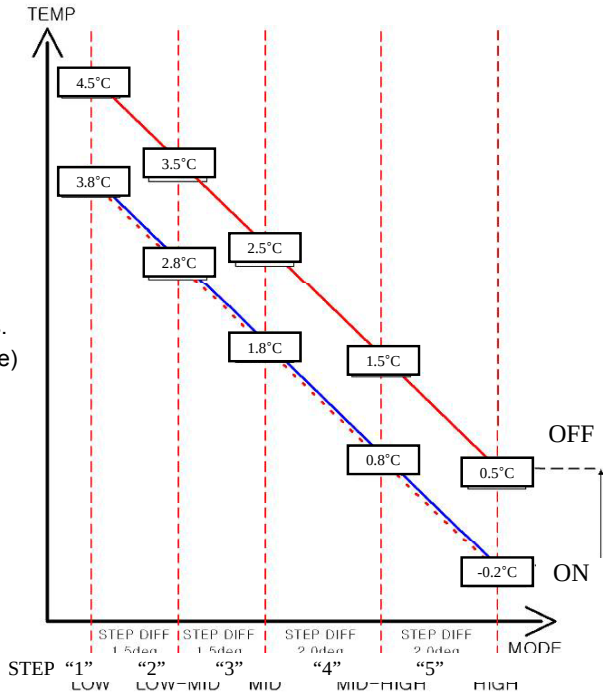

C. “S-COOL” MODE

ⓐ Press S-COOL SWITCH and make S-COOL led lamp on.

ⓒ COMP & FAN are on until R-sensor reaches to “Over Refrigeration OFF Point”, **-7°C**

ⓓ After the reach of **-7°C** , STEP “5” mode continues.

ⓑ When “S-COOL” MODE (Quick Refrigeration Mode) lasts for about 40 minutes, it returns to general operation mode.

D. Temperature of Freezer Control

-It will be only controlled by using “KNOB F LOUVER” in Freezer.

Downloaded from www.Manualslib.com manuals search engine

7-3. Defrost Mode

INPUT	CONTROL OBJECT
● Total COMP Work Time ● COMP Working Rate ● Total Door Open Time ● RT	● Defrost Mode

● Conditions of Defrost Mode

A. When total operation time of compressor becomes: 6, 8, 10, 12 hours.
ⓐ any error mode-R1, D1, F3, C1, RT/S, Door SW error- happens.
ⓑ or, running rate of COMP (per 2hrs of total operation time) is more than 90%.
ⓒ or, total door open time is over 3 minutes.
ⓓ or, ambient temperature (RT) is more than 40°C.
B. Even if the above condition "**A**" is not satisfied,
ⓐ Defrost mode starts immediately when total operation time of COMP is 14hrs.
ⓑ or, defrost mode starts immediately as long as total time (COMP on time + COMP off time) is 60 hrs.

● Defrost Mode

A. General Defrost Mode
ⓐ How to start: By conditions of defrost
ⓑ Process :
General operation→
"PRE-COOL" → Defrost Heater on→ Pause(10 min)→ General operation
※ PRE-COOL: When the defrost heater works, the temp. of freezer increases.
So the COMP works for 25 min before defrost mode.
ⓒ Limited Time of Defrost Heater
● 40 minutes: Heater turns off when "D SENSOR" is OPEN or SHORT.
● 50 minutes: Heater turns off after 50 minutes.
ⓓ Heater Off: When the temperature at "D SENSOR" is over 10°C

	PRE-COOL	Defrost Mode	Pause
Compressor	ON	OFF	OFF
Fan	ON	OFF	OFF
Defrost Heater	OFF	ON	OFF

B. Forced Defrost Mode
ⓐ How to start: by press "UP" button for continuously and "S-COOL" button 5 times.
ⓑ Process: same as General Defrost Mode except "PRE-COOL"
※ Heater is on Initial 30 seconds even though the temp. at "D SENSOR" is over 10°C.
(for TEST)
ⓒ How to confirm: by press "UP" button for continuously and "DOWN" button 5 times.
And then, the mode displays.
ⓓ Display : led lamps "3"& "S-COOL" on, "4" & "5" on/off continually

Downloaded from www.Manualslib.com manuals search engine

7-3. Defrost Mode

INPUT	CONTROL OBJECT
● Total COMP Work Time ● COMP Working Rate ● Total Door Open Time ● RT	● Defrost Mode

● Initial Defrost

A. In providing initial power or returning power failure,
if the temperature at the D-sensor is under 3.5°C, Defrost Mode starts. (It proceeds from "PRE-COOL".)
["PRE-COOL" → Heater on → Pause(10 min) → General operation **]**

B. Initial defrost mode starts after "Prevention of Compressor Restart". (Refer to Function No. 5)

● Flow Chart of Defrost Start

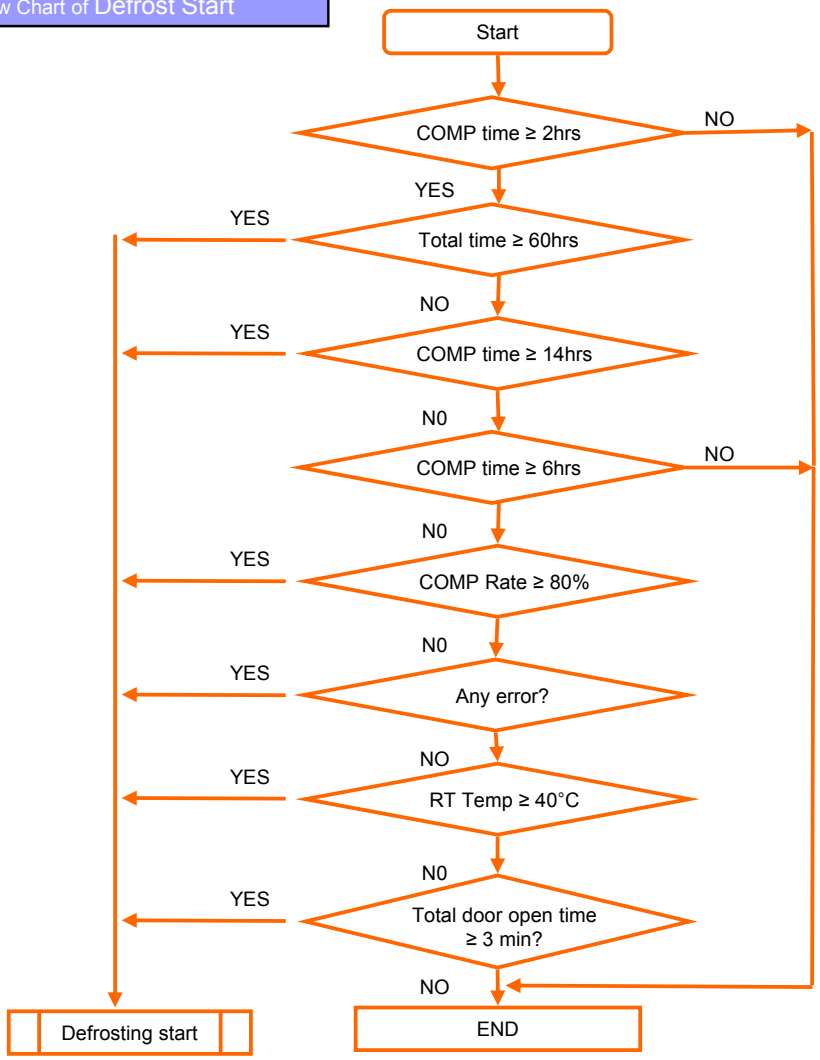

Downloaded from www.Manualslib.com manuals search engine

7-4. Function of Low Ambient Temperature (RT)

INPUT	CONTROL OBJECT
● RT	● R-HTR ● COMP

A. Condition of LOW RT

ⓐ LOW RT Period : RT sensor ≤ 19°C

ⓑ When the temperature of RT sensor is over 20°C, the system comes to be “General Operation Mode”.

ⓒ When the temp. of RT sensor is between 19°C to 20°C, the system keeps the previous mode.

B. Control

ⓐ When Comp. is on, R-HTR is off.

ⓑ When it passes 6 min after COMP is off, R- HTR is on.

ⓒ COMP can’t be on within 30 min after COMP is off.

※ COMP doesn’t work at the steps “Heater On” and “Pause” of “Defrost Mode”.
If COMP comes to be off for “Low Room Temp” in the steps, it seems to take over 30 minutes.

ⓓ Change of “Prevention Time of COMP Restart” :
If satisfy the following conditions simultaneously, the time changes 6 minutes.

- Accumulated running time of COMP passes 20 seconds after COMP is off.
- R-Sensor is more than ‘ON’ Point TEMP.

ⓔ When it is not the mode of LOW ROOM TEMP
or RT-Sensor is on ERROR (open or short), R-Sensor HTR is off.

ⓕ Function of R-Heater Inspection:
After initial power is on, R-HTR is on/off 5times for 10 seconds.

ⓖ When D-HTR is on, R-HTR is on.

7-5. Prevention of Compressor Restart

INPUT	CONTROL OBJECT
	● COMP

COMP. doesn’t work after COMP turns off even though R-sensor is on condition. (This is to protect comp.)

A. General operation (Temp. at the RT sensor ≥ 20°C): The COMP can’t be on within 6 min.

B. Operation of LOW RT (Temp. at the RT sensor ≤ 19°C):
The COMP can’t be on within 30 min.
(But the COMP can be on after 6min when the doors open more than 20 seconds.)

7-6. Buzzer Sound

INPUT	CONTROL OBJECT
● Control Buttons ● Door Switch ● Initial Power Input	● Buzzer

A. Whenever “PCB Control Panel” button’s pushed, the buzzer rings.

B. After 2 minutes power’s on, the buzzer rings 3 times.

C. Time of Buzzer: Forced Defrost Mode (3 times), Short Circuit Test (1 time)

D. When door opens, the buzzer rings every 1 minute for 5 minutes.

Downloaded from www.Manualslib.com manuals search engine

7-7. Short Circuit Test (Pull Down Test)

INPUT	CONTROL OBJECT
● “SAVE, DOWN” Button	● COMP & FAN

A. How to start: by pressing “SAVE” button for continuously and “DOWN” button 10 times continuously.
B. How to confirm: by pressing “UP” button for continuously and “DOWN” button 5 times.
And then, the mode displays.
C. How to control:
ⓐ COMP & FAN will be on independent of the operating condition. (There is no defrost mode on this test.)
ⓑ It is available to restart the test and it’ll be take 30 hours.
D. CANCEL : after the limit test time 30 hours passes.
E. DISPLAY : LED lamp “1” and “S-COOL” are on and “4” & ”5”are flickeringly.

7-8. Time Reduction

INPUT	CONTROL OBJECT
● ”FAST KEY”	● Buzzer

A. HOW TO REDUCE
ⓐ 1 min : Click FAST KEY one time on MAIN PCB.
ⓑ 30 min : If you press FAST KEY continuously, you can reduce 30 minutes on each 2.5 seconds with buzzer.
B. Practice Use : Can be applied to reduce needless time on test.
EX) function of stop for 6 min

7-9. Demonstration Function

INPUT	CONTROL OBJECT
● “S-COOL” +”SAVE” Buttons	● Display Panel

A. START : by pressing “S-COOL” and “SAVE” buttons for 5 seconds.
B. CONTROL :
ⓐ All electronic compartments are off except “Display Panel”.
ⓑ When “DEMO” mode works, led lamps will be on as next steps.
[“1” → “2” → “3” → “4” → “5” → “1”**]**
D. CANCEL :
Push again “TEMP” and “S-COOL” buttons for 5 seconds at “DEMO”, or turn off power and restart.

Downloaded from www.Manualslib.com manuals search engine

7-10. Control of R-sensor OFF Point

INPUT	CONTROL OBJECT
● ”J1” On Main PCB	● Control Resistance of R sensor OFF Point

A. LOW COOLING OPTION

- When the refrigeration of refrigerator is poor or weak though Fan and COMP are working continuously, the following actions are recommended for service.
  - ● Resistance (R39) : Default resistance (31.4Kohms)
  - ● Resistance (R36) : Cut the “J1” off to reduce basic resistance by 1.5°C. (2KΩ up)
  - ● Resistance (R31) : Cut the “J2” off additionally to reduce basic resistance by 1.5°C. (total 4KΩ up)

R39 = R-SENSOR OFF point

R36 + R39 = R-SENSOR OFF point - 1.5°C

R31 + R36 + R39 = R-SENSOR OFF point - 3°C

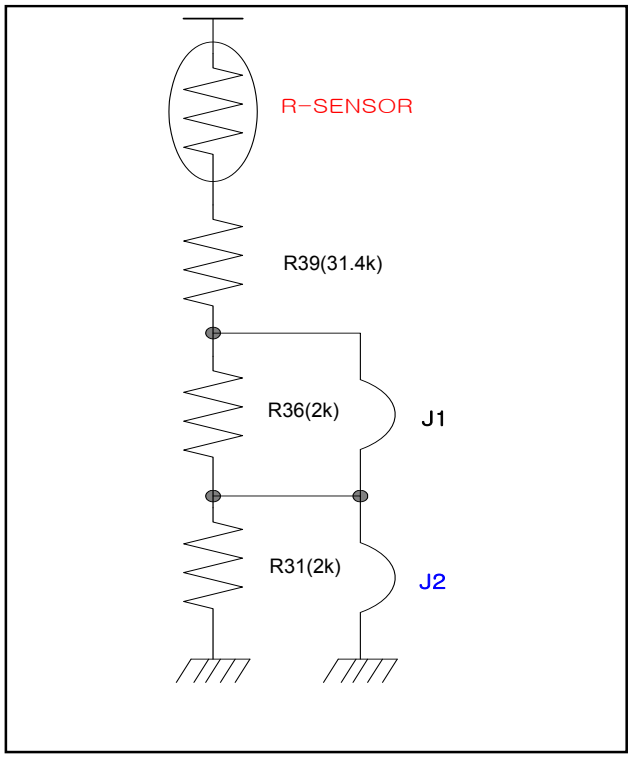

Downloaded from www.Manualslib.com manuals search engine

7-11. Error Display

INPUT	CONTROL OBJECT
● PCB Control Panel Buttons ● Door	● LED Lamp

- ERROR DISPLAY
  - To confirm error happens or not, push “UP” button for continuously and “DOWN” button 5 times.
  - To stop the Error Display Set, push “SAVE” button 1 times, or wait 4 minutes.
  - After operations back to normal, the displays come to be reset.

A. R1 ERROR

(It happens when R-Sensor is OPEN or SHORT)

ⓐ DISPLAY : STEP “3” LED is on & off continually.

ⓑ CONTROL :

- Controlled by the following condition of RT
- When “RT ERROR” happens at the same time, “COMP. ON/OFF Operating Time” is 16min/24min.

(Unit : min)

RT sensor TEMP	~13°C	~19°C	~29°C	29°C~
COMP. Operating TIME (ON/OFF)	6/34	10/30	16/24	20/20

ⓒ CANCEL : when R-Sensor is working normally.

B. RT ERROR

(It happens when RT-Sensor is OPEN or SHORT)

ⓐ DISPLAY : STEP “2” LED is on & off continually.

ⓑ CONTROL : Delete the conditions of “RT-sensor Control” and operate normally.

ⓒ CANCEL : when RT-Sensor is working normally.

C. D1 ERROR

(It happens when D-Sensor is OPEN or SHORT)

ⓐ DISPLAY : STEP “1” LED is on & off continually.

ⓑ CONTROL : Return to next limit defrost time (40 min)

ⓒ CANCEL : when D-Sensor is working normally.

D. DR ERROR

(It happens when the system senses door opens more than 1 hour.)

ⓐ DISPLAY : STEP “2”, “3” LED Lamps are on & off continually.

ⓑ CONTROL : Deletion of function related door switch sensing

ⓒ If door switch (open & close) is sensed, the error is terminated automatically

E. C1 ERROR

(When D-Sensor is more than -5°C, Comp operates over 3 hrs)

ⓐ DISPLAY : STEP “1” & “3” LED Lamps are on & off continually.

ⓑ CONTROL : The system is normally operating

ⓒ CANCEL : When Comp is off, D-Sensor is less than -5°C.

F. F3 ERROR

(Return to next limit defrost time (50 min))

6.1- DISPLAY : STEP “1” & “2” LED Lamps are on & off continually.

6.2- CONTROL : At Defrost Mode, Deletion of “PRE-COOL” Mode.

6.3- CANCEL : Completion of defrost returned by D-Sensor.

flickeringly

CODE	LED	ERROR
R1	“3”	R sensor
RT	“2”	RT sensor
D1	“1”	D sensor
DR	“2”, “3”	DR Switch
C1	“1”, “3”	Cycle
F3	“1”, “2”	Defrost

※ To Confirm Errors:
Push “UP” for continuously and “DOWN” button 5 times.

※ The Priorities of Error :
R1→RT→D1→DR→C1→F3

Downloaded from www.Manualslib.com manuals search engine

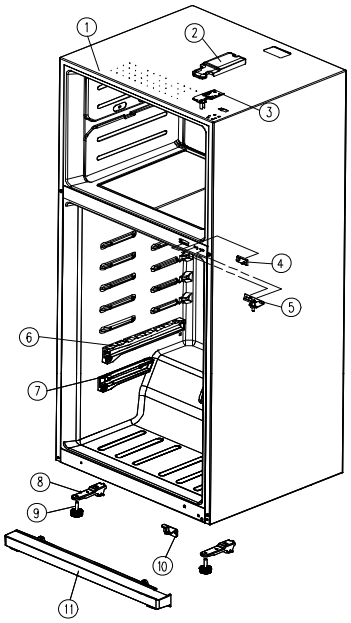

NO	PART-CODE	PART NAME	SPEC.	Q'ty
1	3000066310	ASSY CAB URT	FRP-510,DIGITAL	1
2	3001445400	COVER *T HI	PP J-370A, FRP-512	1
3	3012935400	HINGE *T AS	SHP1 2.6T, FPR-512	1
4	3018100010	SWITCH DR	2 BUTTON/4P,DSD-5	1
5	3012935500	HINGE *M AS	SHP1 4T MFZN FRP-512	1
6	3012543200	GUIDE C/C *L AS	FRP-512, GUIDE+ROLLER	1
	3012543300	GUIDE C/C *R AS	FRP-512, GUIDE+ROLLER	1
7	3012543400	GUIDE V/CASE *L AS	FRP-512, GUIDE+ROLLER	1
	3012543500	GUIDE V/CASE *R AS	FRP-512, GUIDE+ROLLER	1
8	3016502800	CASTER *F AS	FRP-512, T2.6	2
9	3012105101	FOOT ADJ AS	PP(BLACK)	2
10	3012935600	HINGE *U AS	SHP1 5T, FRP-512	1
11	301149A500	COVER CAB BRKT *F	FRP-512, PP J-370A	1

- Some parts can be chaged for improving their perfomance without notice.

Date	***A*** *mendment Note*

Downloaded from www.Manualslib.com manuals search engine

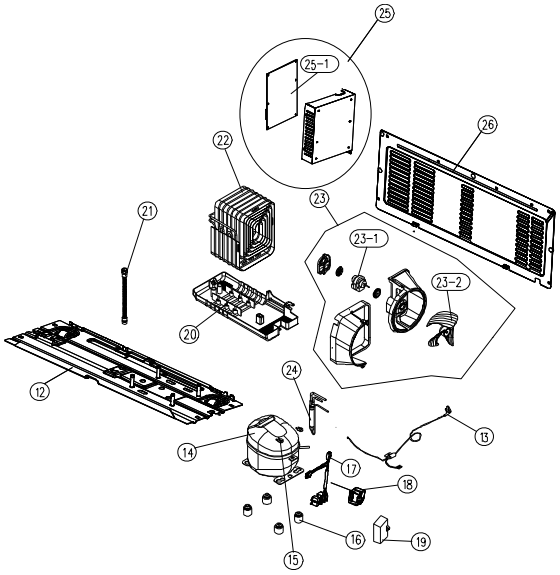

NO	PART-CODE	PART NAME	SPEC.	Q'ty
12	3010345201	BASE COMP AS	FR-B512FH	1
13	OPTION	CORD POWER AS	-	1
14	3956126S51	COMPRESSOR	HPL26YH-5-K, 220-240V/50HZ	2
	3956112250		DG125E11RAW5 220-240V/50HZ	1
	3956183Q5B		MK183Q-L2UB/DW2 220-240V/50HZ	1
	3953158K20		YX58LHE2 127V/60HZ	1
	3953158K30		YF58LHE3 110V/60HZ	1
	3956162D4A		MK162B-L1UA 220V/60HZ	1
15	3016007000	SPECIAL WASHER	SBHG T0.6	4
16	3010101600	ABSORBER COMP	R-134a	4
	3010101480	ABSORBER COMP AS	R-600a	4
17	3018134300	SWITCH P RELAY AS	DW HPL26YH	1
	3018129650		Panasonic(R600a)	1
	3018130620		S/S MK183Q	1
	3018130640		DW YX58LHE2/3	1
	3018130650		S/S MK162B	1
18	3811400503	COVER RELAY	DW HPL26YH / DW YX58LHE2/3	1
	3811402100		S/S MK183Q / MK162B	1
	3001410000		Panasonic DG125E11RAW5	1
19	3016406100	CAPACITOR RUN	400V 5UF /HPL26YH, MK183Q	1
	3016405800		350V 4UF/Panasonic(R600a)	1
	3016405900		350V 5UF S/S MK162B	1
	3016405020		250V 12UF DW YX58LHE2/3	1
20	3011190910	CASE VAPORI AS	FRP-512	1
21	3012513950	HOSE DRN B	PVC	1
22	3014467230	PIPE WICON AS	FRP-512	1
23	3018410140	MOUTHBELL AS	FR-B512FH(DC12V)	1
23-1	3015914110	MOTOR C FAN	D4612AAA27 12V 1000RPM	1
23-2	3011836300	FAN	ABS(OD150)	1
24	3016808100	DRYER AS	SBS 12G	1
25	3010576900	BOX M/PCB AS	FRP-512 BOX+M-PCB	1
25-1	30143JC060	PCB MAIN AS	FR-1, 197X122-1.6T	1
26	3012407000	GRILLE AS	GRILL+SEAL	1

- Some parts can be chaged for improving their perfomance without notice.

Date	***A*** *mendment Note*

Downloaded from www.Manualslib.com manuals search engine

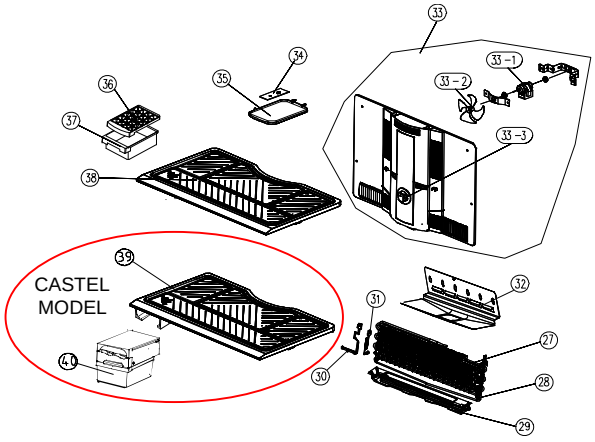

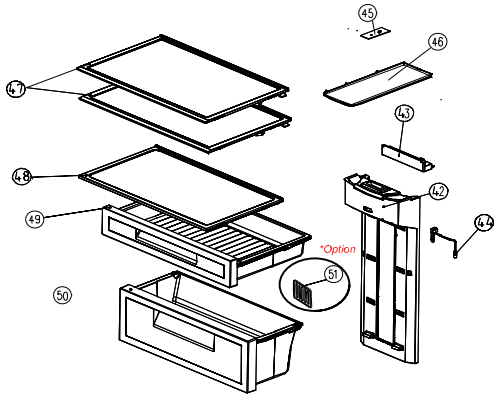

NO	PART-CODE	PART NAME	SPEC.	Q'ty
27	3017065500	EVA AS	FRP-510	1
	3017068300		FRP-510(R600a)	1
28	3012823100	HEATER SHEATH AS	230V 200W R-600a	1
29	301281010	HEATER D AS	230V 250W R-134A	1
30	3017202700	FUSE TEMP AS	FR-B512FH	1
	3017203220		FR-510C(R600A)	1
31	3012767700	HARNESS D SENS	NBC-K43-D24(PBN-43) R-134a	1
	3012767710		GERNERAL (0D8) TPYE R-600a	1
32	3012530800	GUIDE DRN	GL T0.4X550X240	1
33	3018927610	LOUVER F AS	DC 12V	1
	3018927630		DC 12V +DECO	1
33-1	3015919500	MOTOR F FAN AS	DC12V	4
33-2	3011802700	FAN AS	FAN(OD110)+CLAMP	4
33-3	3013415000	KNOB F CONTL	HIPS, HI450	1
34	30143JC210	PCB FRE LED AS	4-LED FR-4 51X40-1.6T	1
35	3015519900	WINDOW F LAMP	FRP-512, PS MF-1-301	1
36	4010G56012	CASE ICING (OPTION)	Option	1
37	4017Z99112	CASE ICE (OPTION)	Option	1
~~38~~	~~3017853400~~	~~SHELF F~~ (OPTION)	~~FRP-512, PS MF-1-301~~	~~1~~
39	3017859400	SHELF F AS	SHELF+FRAME I/CASE	1
40	3010518900	BOX ICE	GPPS	1
42	3001443900	COVER M/F DUCT AS	FRP-512	1
	3011660700		GPPS+DECO	1
43	3012542500	GUIDE DRN *O	FRP-512 HIPS HI450	1
44	3014810300	SENSOR R AS	HARNESS+SENSOR FRP-512	1
45	30143JC220	PCB REF LED AS	6-LED FR-4 172X20-1.6T	1
46	3015520000	WINDOW R LAMP	FRP-512, PS MF-1-301	1
47	3017853600	SHELF R AS	PP+GLASS INJECTION	2
	3017853610		PP+GLASS INJECTION+DECO	
48	3017853300	SHELF C/C AS	PP+GLASS INJECTION FRP-512	1
49	301119A800	CASE CHILD AS	FRP-512	1
50	301119AG00	CASE VEGETB AS	FRP-512	1
51	301119AC00	CASE DECO	FRP-512 / J370A	1

- Some parts can be chaged for improving their perfomance without notice.

Date	Amendment Note

Downloaded from www.Manualslib.com manuals search engine

F-DOOR

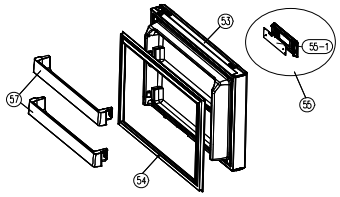

651.. Model Only.

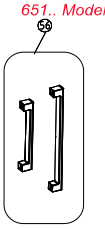

R-DOOR

Basic Model
(650/651NT..)

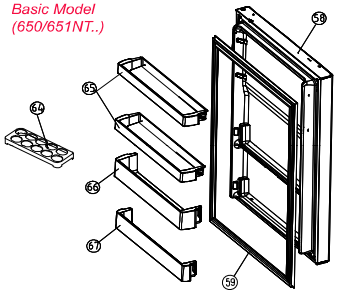

Dispns. Model
(650/651NW..)

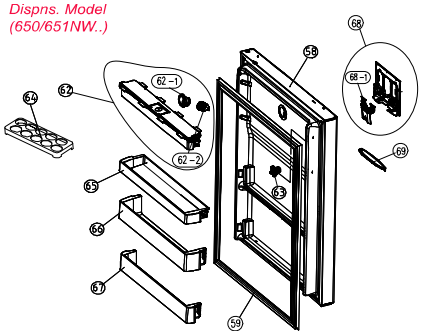

NO	PART-CODE	PART NAME	SPEC.	Q'ty			
				650NT	650NW	651NT	651NW
53	300009C700	ASSY F DR	TITANIUM PCM	1	1	X	X
	300009C710		TITANIUM ELLIO	1	1	X	X
	300009C720		M/WHITE EMBO	1	1	X	X
	300009C730		TITANIUM VCM	1	1	X	X
	30100B5300		TITANIUM PCM	X	X	1	1
	30100B5310		TITANIUM ELLIO	X	X	1	1
	30100B5320		M/WHITE EMBO	X	X	1	1
	30100B5330		TITANIUM VCM	X	X	1	1
54	3012320200	GASKET F DR AS	PVC, GRAY	1	1	1	1
55	3014249700	PANEL *F CONTL AS	FRP-512	1	1	1	1
55-1	30143JC160	PCB FRONT AS	2010 510 PCB FRONT	1	1	1	1
56	3012655900	HANDLE PAKG AS	NO PAINT	X	X	1	1
57	3019064300	POCKET F	PC MF-1-301 FRP-512	2	2	2	2
58	300009C850	ASSY R DR	TITANIUM ELLIO	1	X	X	X
	300009C860		M/WHITE EMBO	1	X	X	X
	300009C870		TIANIUM VCM	1	X	X	X
	300009C880		TITANIUM ELLIO	X	1	X	X
	300009C890		M/WHITE EMBO	X	1	X	X
	300009C8A0		TIANIUM VCM	X	1	X	X
	300009C840		TITANIUM ELLIO	X	X	1	X
	300009C8B0		M/WHITE EMBO	X	X	1	X
	300009C8C0		TIANIUM VCM	X	X	1	X
	300009C8D0		TITANIUM ELLIO	X	X	X	1
	300009C8E0		M/WHITE EMBO	X	X	X	1
	300009C8F0		TIANIUM VCM	X	X	X	1
59	3012320300	GASKET R DR AS	PVC, GRAY	1	1	1	1
62	3018202100	TANK WATER AS	FRP-513	X	1	X	1
62-1	3014008800	PACKING DISPNS HOLDER	SILICON KCC0160 FRP-516	X	1	X	1
62-2	3015407000	VALVE WATER	FRP-513	X	1	X	1
63	3015206400	STOPPER W/TANK *R	ABS SG0760, FRP-513	X	1	X	1
64	3011190800	CASE EGG TRAY	GPPS	1	1	1	1
65	3019064700	POCKET EGG	FRP-512 PS MF-1-301	2	1	1	2
67	3019064900	POCKET JUMBO	PC MF-1-301 FRP-512	1	1	1	1
68	3014250500	PANEL DISPNS AS	PANEL+LEVER FRP-512	X	1	X	1
68-1	3013703300	LEVER DISPNS	PC FRP-513	X	1	X	1
69	301119AD00	CASE DISPNS DRN	ABS SG0760, FRP-513	1	1	1	1

Downloaded from www.Manualslib.com manuals search engine