GRUNDIG

Refrigerator

Installation & User instructions

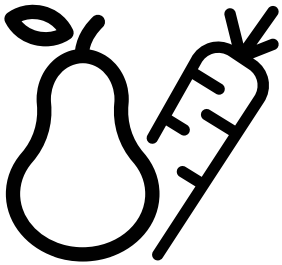

GKFED455

ENG

Please read these instructions first before using your appliance

Thank you for choosing a Grundig appliance.
Please take some time to read this user manual before using your appliance, to ensure you know how to safely operate the controls and functions.
Carefully follow all unpacking and installation instructions to ensure the appliance is correctly connected and fitted prior to use.
Please write your product model and serial number on the last page of this user manual, and store in a safe location close to the appliance for easy future reference.
This user manual may also be applicable for several other models. Differences between models will be listed.
If you have any questions or concerns, please call our contact centre or find help and information online at www.grundig.co.uk.

Explanation of symbols used throughout this User Manual

 - The terminal in the plug is marked with the symbol.

 - The freezer compartment is marked with the symbol.

 - Important information or useful usage tips.

 - Some installation steps in furniture are marked with the symbol of attention.

 - Symbol for waste electrical and electronic equipment.



WARNING!
In order to ensure a normal operation of your refrigerating appliance, which uses a completely environmentally friendly refrigerant the R600a (flammable only under certain conditions) you must observe the following rules:

- Do not hinder the free circulation of the air around the appliance.
- Do not use mechanical devices in order to accelerate the defrosting, others than the ones recommended by the manufacturer.
- Do not destroy the refrigerating circuit.
- Do not use electric appliances inside the food keeping compartment, other than those that might have been recommended by the manufacturer.

Contents

ENG

Introduction & safety warnings.....4
Electrical requirements.....5
Transportation instructions.....6
Important Installation instructions 7
Getting to know your fridge / freezer.....8
Suggested arrangement of food in the fridge / freezer.....9
Operating the product.....10
Starting.....11
Storing frozen food.....11
Freezing fresh food.....11
Making ice cubes.....11
Defrosting.....12
Cleaning and care.....13
Replacing the interior light bulb.....13
Do's and don'ts.....13
Energy saving tips.....14
Problem solving 14
Installation instructions detailed step by step.....15
Reversing the doors.....24
Installation of high levelling foot.....25
Manufacturer guarantee terms and conditions.....28
Inverter motor guarantee terms and conditions.....30
How to obtain service for your appliance.....31

Please keep this handbook for future reference, or for anyone else who may use the appliance.

Congratulations on your choice of a **GRUNDIG** quality Appliance which has been designed to give you service for many years.

WARNING!

IMPORTANT!

DO NOT connect your appliance to the electricity supply until all packing and transit protectors have been removed.

- Leave to stand for at least 4 hours before switching on to allow compressor oil to settle if transported horizontally.
- If you are discarding an old refrigerator with a lock or latch fitted to the door, disable the lock/latch, ensure that it is left in a safe condition to prevent the entrapment of young children.
- This fridge/freezer must only be used for its intended purpose i.e. the storing and freezing of edible foodstuff.
- Do not dispose of the appliance on a fire. At GRUNDIG, the care and protection of our environment is an ongoing commitment. This appliance which is among the latest range introduced is particularly environment friendly. Your appliance contains non CFC / HFC natural substances in the cooling system (Called R600a) and in the insulation (Called cyclopentane) which are potentially flammable if exposed to fire. Therefore, take care not to damage, the cooling circuit / pipes of the appliance in transportation and in use. In case of a damage do not expose the appliance to fire, potential ignition source and immediately ventilate the room where the appliance is situated.
- We suggest you contact your local authority for disposal information and facilities available.
- See Installation Instructions on **page 7** for information on suitable location.
- To obtain the best possible performance and trouble free operation from your appliance it is very important to carefully read these instructions.
- On delivery, check to make sure that the product is not damaged and that all the parts and accessories are in perfect condition.
- Ensure that the plug remains readily accessible. Do not use a multiple adapter bar or extension cable.
- Failure to observe these instructions may invalidate your right to free service during the guarantee period.

WARNING- Keep ventilation openings, in the appliance enclosure or in the built-in structure, clear of obstruction.

WARNING- Do not use mechanical devices or other means to accelerate the defrosting process, other than those recommended by the manufacturer.

WARNING- Do not damage the refrigerant circuit.

WARNING- Do not use electrical appliances inside the food storage compartments of the appliance, unless they are of the type recommended by the manufacturer.

- We suggest you keep these instructions in a safe place for easy reference.
- This appliance is not intended for use by persons (including children) with reduced physical, sensory or mental capabilities, or lack of experience and knowledge, unless they have been given supervision or instruction concerning use of the appliance by a person responsible for their safety.
- Children should be supervised to ensure that they do not play with the appliance.
- If there is a blue light on the refrigerator, do not look at the blue light with optical tools.

PERFORMANCE	GRUNDIG Frost Free Combi Fridge Freezer **GKFED455**
Energy efficiency class	A++
Energy consumption - Kwh/year	249
Net storage - vol fresh food ltrs (cu.ft.)	163 (5.76)
Net storage - vol frozen food ltrs (cu.ft.)	91 (3.21)
Total net vol - ltrs (cu.ft.)	254 (9.00)
Frozen food compartment rating	4 STAR
Conservation time from failure	13 h.
Freezing capacity fresh food - kg (lb) / 24 hrs.	4.25 (9.35)
Climate class	SN-ST
Operating noise level dB(A) re 1 pW	38

ELECTRICAL REQUIREMENTS

Before you insert the plug into the wall socket make sure that the voltage and the frequency shown in the rating plate inside the appliance corresponds to your electricity supply.

Rating label is on the left hand side of fridge inner liner.

We recommend that this appliance is connected to the mains supply via a suitable switched and fused socket in a readily accessible position.

WARNING: When positioning the appliance ensure the supply cord is not trapped or damaged.

Should the mains lead of the appliance become damaged or should it need replacing at any time, it must be replaced by a special purpose made mains lead which can only be obtained from a **GRUNDIG** Authorised Service Agent.

WARNING! THIS APPLIANCE MUST BE EARTHED

If the fitted moulded plug is not suitable for your socket, then the plug should be cut off and an appropriate plug fitted. Destroy the old plug which is cut off as a plug with bared cord could cause a shock hazard if inserted into a socket elsewhere in the house.

The moulded plug on this appliance incorporates a 13 A fuse. Should the fuse need to be replaced an ASTABEAB approved BS 1362 fuse of the same rating must be used. Do not forget to refit the fuse cover. In the event of losing the fuse cover the plug must not be used until a replacement fuse cover has been fitted. Colour of the replacement fuse cover must be the same colour as that visible on the pin face of the plug. Fuse covers can be obtained from an authorised service agent.

IMPORTANT! FITTING A DIFFERENT PLUG

As the colours of the wires in the mains lead of this appliance may not correspond with the coloured markings identifying the terminals in your plug proceed as follows: (See diagram).

1. Connect the green-yellow or green (Earth) wire to the terminal in the plug marked 'E' or with the symbol ⏚ or coloured green and yellow or green.

2. Connect the blue (Neutral) wire to the terminal in the plug marked 'N' or coloured black.

3. Connect the brown (Live) wire to the terminal in the plug marked 'L' or coloured red.

With alternative plugs a 13 A fuse must be fitted either in the plug or adaptor or in the main fuse box.

If in doubt contact a qualified electrician.

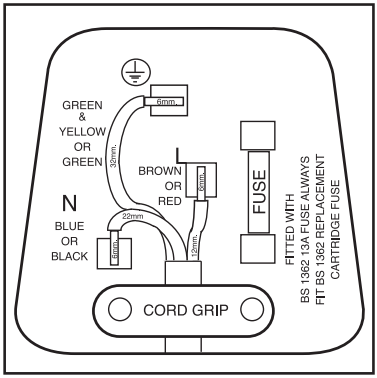

WARNING: Do not locate extension sockets or charging transformers/power supplies or Lithium-Iron battery operated products adjacent to the compressor as they could overheat.

TRANSPORTATION INSTRUCTIONS

1. The appliance should be transported only in a vertical upright position. The packing as supplied must be intact during transportation.
2. If transported horizontally, leave to stand upright for at least **4** hours before switching on, to allow compressor oil to settle.
3. Failure to comply with the above instructions could result in damage occurring to the appliance. The manufacturer will not be held responsible if these instructions are disregarded.
4. The appliance must be protected against rain, moisture and other atmospheric influences.
5. When positioning your appliance take care not to damage your flooring, kitchen furniture, related parts and doors, pipes, wall coverings etc. Do not move the appliance by pulling by the door.
6. Empty any water in the drain tray before moving. See section 'DEFROSTING' and 'CLEANING AND CARE' for further information.
7. Make sure that the defrost water pipe at the back of the product is fixed to the plastic evaporating pan on the top of the compressor, to avoid defrost water spillage on the floor.

IMPORTANT: Care must be taken while cleaning / carrying the appliance to avoid touching the bottom of the condenser metal wires at the back of the appliance as you might injure your fingers and hands.

Do not attempt to sit or stand on top of your appliance as it is not designed for such use. You could injure yourself or damage the appliance.

"IMPORTANT: Make sure that mains cable is not caught under the appliance during and after carrying / moving the appliance, to avoid the mains cable becoming cut or damaged."

Do not allow children to play with the appliance or tamper with the controls.
GRUNDIG declines to accept any liability should the instructions not be followed.

IMPORTANT
INSTALLATION INSTRUCTIONS

1. The space in the room where the appliance is installed must not be smaller than 10 cubic metres.

2. See pages **15** to **24** for detailed Installation Instructions including reversing door opening direction.

3. This appliance has been designed to operate in ambient temperatures up to **38** degrees C (**100** degrees F) and is equipped with **Freezer Guard technology which ensures that even if the ambient temperature falls to -15°C, frozen food in the freezer does not thaw thanks to this**. So, you may then install your appliance in a garage or an unheated room without having to worry about frozen food in the freezer being spoilt. However, at low ambient temperatures mentioned above, fridge contents are likely to freeze, so check and consume food in the fridge accordingly. When the ambient temperature returns to normal, you may change the temperature setting to suit your needs.
If the ambient temperature is below 0°C, the food in the fridge compartment will freeze. So, we recommend you don't use the fridge compartment in such low ambient conditions. You can continue using the freezer compartment as usual.

4. Do not place the appliance near cookers, radiators or in direct sunlight as this will cause your appliance to work harder. If installed next to a source of heat or freezer, maintain the following minimum side clearances:

From Cookers	50 mm (2")
From Radiators	300 mm (12")
From Freezers	25 mm (1")

5. Refer to cleaning and care section to prepare your appliance for use.

6. A special receptacle is supplied to store the mains plug during transit.
The receptacle is fixed at the back of the cabinet, on the side of the compressor (see diagram). Gently remove the plug from the receptacle. Never pull the mains cord, you may damage the appliance. In the case of transportation, ensure you locate the plug in the receptacle provided to avoid transit damage.

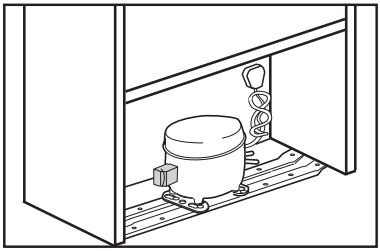

GETTING TO KNOW YOUR COMBI FROST FREE FRIDGE / FREEZER

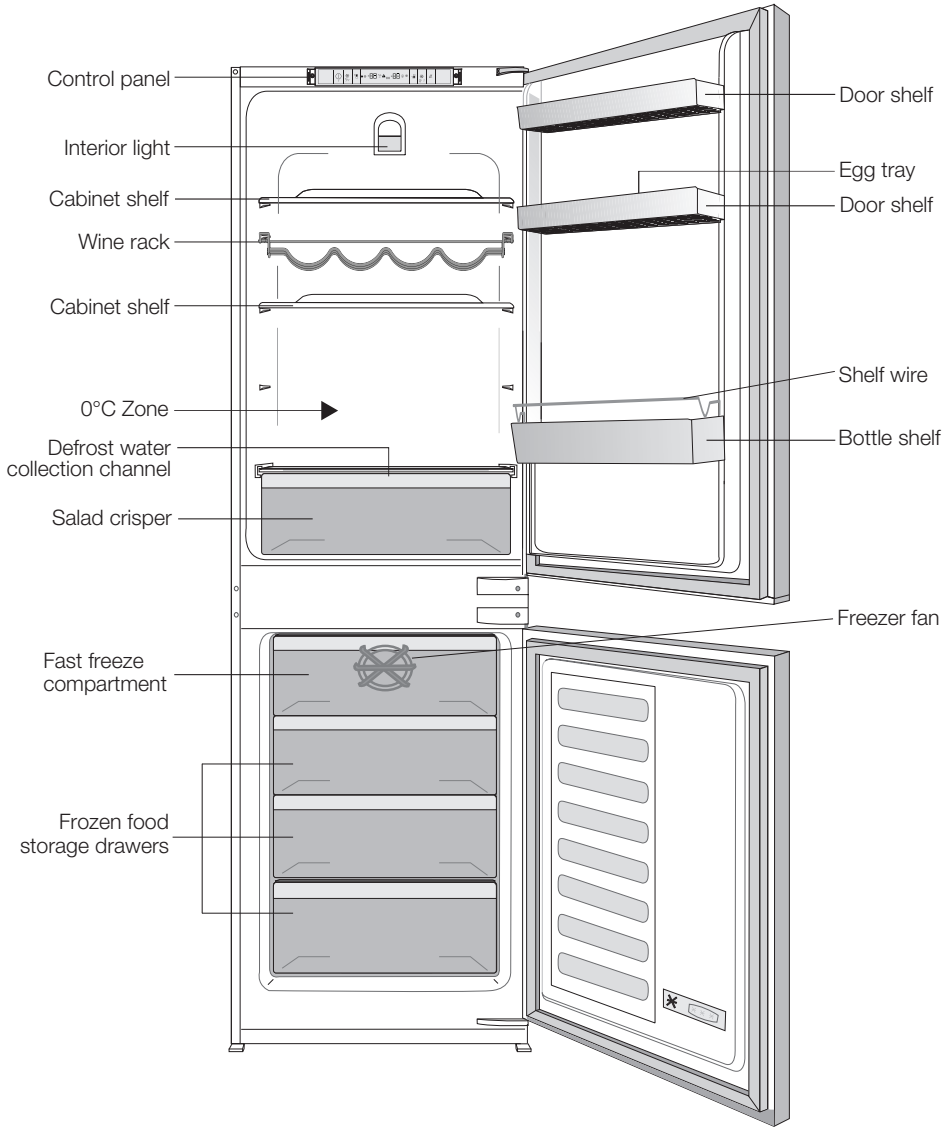

Figures in this user manual are schematic and may not match the product exactly. If the subject parts are not included in the product you have purchased, then those parts are valid for other models.

SUGGESTED ARRANGEMENT OF FOOD IN THE FRIDGE/FREEZER

Arrangement Examples (see diagram)

1. Baked, chilled cooked food, dairy products, cans.
2. Wine bottles.
3. Meat, sausages, cold cuts, fresh fish, meat, and easily perishable food.
4. Fresh fruit and vegetables.
5. Frozen food and freezing of fresh food.
6. Frozen food.
7. Small bottles, cans, tubes.
8. Eggs.
9. Tall, large bottles, beverages.

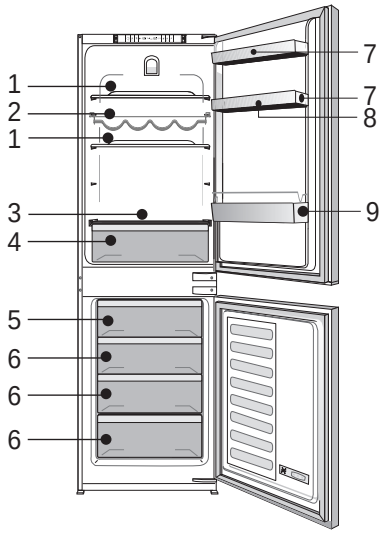

The following guidelines and recommendations are suggested to obtain the best results and storage hygiene.

1. The fridge compartment is for the short term storage of fresh food and drinks.
2. The freezer compartment is ******* rated and suitable for the freezing and storage of pre frozen food. The recommendation for ******* storage as stated on the food packaging should be observed at all times.
3. Cooked dishes must be stored in airtight covered containers.
4. Fresh wrapped produce can be placed on the shelf. Fresh fruit and vegetables should be cleaned and stored in the crisper bins.
5. Bottles can be placed in the door section.
6. To store raw meat, wrap in polythene bags and place on the lowest shelf. Do not allow to come into contact with cooked food to avoid contamination. For safety, only store raw meat for two to three days.
7. Keep the food packed wrapped or covered. Allow hot food and beverages to cool before placing them in the fridge. Do not store explosive substances. High proof alcohol must be stored upright in sealed containers. Left over canned food should not be stored in the can.
8. Fizzy drinks should not be frozen and products such as flavoured water ices should not be consumed too cold.
9. Some fruit and vegetables suffer damage if kept at temperatures near 0°C. Therefore wrap pineapples, melons, cucumbers, tomatoes and similar produce in polythene bags.
10. Place chilled cooked food and similar food near the rear of the fridge inner liner where the cold wall is located.
11. Shelves, racks, crisper bins, drawers, flaps, bottle grippers are all removable.
12. Do not leave frozen food at room temperature to thaw; the best way to defrost food is to put it in the fridge to thaw slowly. Make sure you avoid defrosting food or food juices drip onto other food.
13. For hygiene reasons, always wrap food using a suitable packaging material before storing in your appliance to avoid contact with the appliance surface.
14. Maximum frozen food storage volume can be achieved without using the upper shelf cover located in the freezer. Energy consumption of your appliance is declared while the freezer compartment is fully loaded without the use of upper shelf cover.

OPERATING THE PRODUCT

Indicator panel

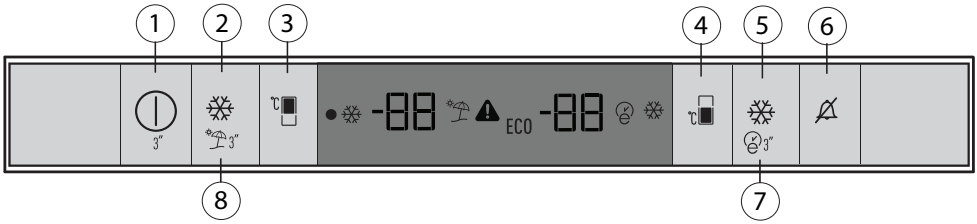

1. On / Off Indicator

Press the On / Off button for 3 seconds to turn off or turn on the fridge. When the fridge is off, the symbol (●) is lit. All the other symbols are turned off.

2. Quick fridge function button

The button (❄) has two functions. To activate or deactivate the Quick Cool function, press it briefly. Quick Cool indicator will turn off and the product return to its normal settings.

	Use the Quick Cooling function when you want to quickly cool the food placed in the fridge compartment. If you want to cool large amounts of fresh food, activate this function before putting the food into the product.
	If you do not cancel it, Quick Cooling will cancel itself automatically after **1** hour at the most, or when the fridge compartment reaches the required temperature. This function is not recalled when power restores after a power failure.

3. Fridge compartment temperature setting button

Press this button (🌡) to set the temperature of the fridge compartment to 8, 7, 6, 5, 4, 3, 2, 8... respectively. Press this button to set the fridge compartment temperature to the desired value.

4. Freezer compartment temperature setting button

Press this button (🌡) to set the temperature of the freezer compartment to -18, -19, -20, -21, -22, -23, -24, -18... respectively. Press this button to set the freezer compartment temperature to the desired value.

5. Quick freeze function button

Press this button (❄) to activate or deactivate the Quick freeze function. When you activate the function, the freezer compartment will be cooled to a temperature lower than the set value.

	Use the Quick Freeze function when you want to quickly freeze the food placed in freezer compartment. If you want to freeze large amounts of fresh food, activate this function before putting the food into the product.
	If you do not cancel it, Quick Freeze will cancel itself automatically after **25** hours at the most or when the freezer compartment reaches the required temperature. This function is not recalled when power restores after a power failure.

6. Alarm off warning

In case of power failure / high temperature alarm, after checking the food located in the freezer compartment press the alarm off button (🔕) to clear the warning.

7. Eco fuzzy

Press and hold the eco fuzzy button (3″) for 3 seconds to activate the Eco fuzzy function. The refrigerator will start to operate in the most economic mode at least 6 hours later and the economic usage indicator will be on (). Press and hold the eco fuzzy function button for 3 seconds to disable the eco fuzzy function. This indicator will be on after 6 hours when eco fuzzy is activated, provided the doors are not opened.
ECO indicator will be active if the freezer compartment temperature is set to -18°C.

8. Vacation Function

In order to activate Vacation function, press this button (3″) for 3 seconds, and the vacation mode indicator (🏖) will be activated. When the vacation function is activated, "- -" is displayed on the fridge compartment temperature indicator and no active cooling is performed in the fridge compartment. It is not suitable to keep the food in the fridge compartment in this function. Other compartments will continue to be cooled according to their set temperatures. To cancel this function press **Vacation** function button again.

STARTING

Final Check

Before you start using the fridge/freezer check that:

1. The interior is dry and air can circulate freely at the rear of the cabinet.

2. Clean the interior as recommended under "CLEANING AND CARE".

3. Insert the plug into the wall socket and switch on the electricity supply.

- When the door is open the fridge interior light will come on.

4. You will hear a noise as the compressor starts up. The liquid and gases sealed within the refrigeration system may also give rise to noise, whether the compressor is running or not which is quite normal.

5. Front edges of the cabinet may feel warm. This is normal. These areas are designed to be warm to avoid condensation.

6. "Do not load the appliance immediately it is switched on. Wait until the correct storage temperature has been reached. We recommend that you check the temperature with an accurate thermometer".

STORING FROZEN FOOD

Pre packed commercially frozen food should be stored in accordance with the frozen food manufacturer's instructions for a ******** frozen food storage compartment. To ensure that the high quality achieved by the frozen food manufacturer and the food retailer is maintained, the following should be remembered:

1. Put packets in the freezer as quickly as possible after purchase.

2. Ensure that contents are labelled and dated.

3. Do not exceed "Use By", "Best Before" dates on the packaging.

If there is a power failure do not open the door. Frozen food should not be affected if the failure lasts for less than **13** hrs. If the failure is longer, then the food should be checked and either eaten immediately or cooked and then re-frozen.

FREEZING FRESH FOOD

Please observe the following instructions to obtain the best results.

Do not freeze too large a quantity at any one time. The quality of the food is best preserved when it is frozen right through to the core as quickly as possible.

Do not exceed the freezing capacity of your appliance in 24 h which is **4.25** kg (**9.35** lb).

Placing warm food into the freezer compartment causes the refrigeration compressor to operate continuously until the food is frozen solid. This can temporarily lead to excessive cooling of the refrigeration compartment.

You may place fresh food to be frozen in any part of the freezer.

Take special care not to mix already frozen food and fresh food.

MAKING ICE CUBES

Fill the ice - cube tray 3/4 full with water. Loosen frozen trays with the handle of a spoon, never use sharp edged objects such as knives, forks.

Note: If freshly made ice cubes are not consumed for several weeks, they will slowly reduce in size and eventually disappear completely.

DEFROSTING

A) FRIDGE COMPARTMENT

The fridge compartment defrosts automatically.

The defrosting water runs to the drain tube via a collection container at the back of the appliance (1) (see diagram). During defrosting water droplets may form at the back of the fridge compartment where concealed evaporator is located. Some droplets may remain on the liner and refreeze when defrosting is completed. Do not use pointed or sharp edged objects such as knives, forks to remove the droplets which have frozen.

If at any time the defrost water does not drain from the collection channel, check to ensure that no food particles have blocked the drain tube. The drain tube can be cleared by pushing the special plastic plunger provided down the drain tube (2). If the frost layer reaches about 1/4"(7 mm), reduce the temperature setting to restart automatic defrosting.

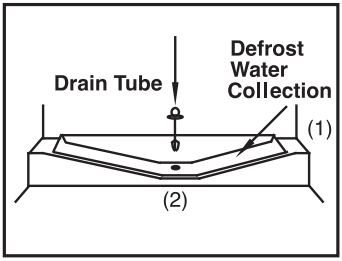

B) FREEZER COMPARTMENT

The freezer compartment defrosts automatically.

Warnings!

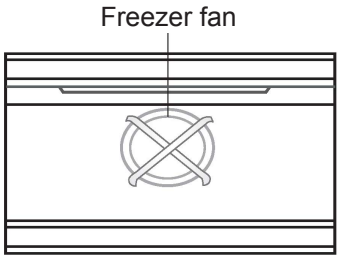

The fan inside the freezer compartment circulates cold air. Never insert any object through the guard.

Do not allow children to play with the freezer fan.

Never store products that contain inflammable propellant gas (e.g. dispensers, spray cans etc.) or explosive substances.

Don't cover the shelves with any protective materials, which may obstruct air circulation.

Do not allow children to play with the appliance or tamper with the controls.

Do not obstruct the freezer fan guard to ensure that you obtain the best possible performance from your appliance.

CLEANING AND CARE

** We recommend that you switch off the appliance at the socket outlet and pull out the mains plug before cleaning.
** Never use any sharp abrasive instrument, soap, household cleaner, detergent and wax polish for cleaning.
** Use lukewarm water to clean the cabinet of the appliance and wipe it dry.
** Use a damp cloth wrung out in a solution of one teaspoon of bicarbonate of soda to one pint of water to clean the interior and wipe it dry.
** Make sure that no water enters the lamp housing.
** Excess deposits of ice should be removed on a regular basis with the handle of a spoon. Large accumulation of ice will impair the performance of the appliance.
** If the appliance is not going to be used for a long period of time, unplug the appliance, remove all food, clean it and leave the door open.
** Check door seals regularly to ensure they are clean and free from food particles.
** Removal of door tray:

- To remove door racks, remove all the contents and then simply push the door rack upwards from the base.

** To remove a freezer drawer, pull it as far as possible, and then tilt it upwards, and then pull it out completely.

REPLACING THE INTERIOR LIGHT BULB

To change the Bulb/LED used for illumination of your refrigerator, call your Authorised Service.
The lamp(s) used in this appliance is not suitable for household room illumination. The intended purpose of this lamp is to assist the user to place foodstuffs in the refrigerator/freezer in a safe and comfortable way.
The lamps used in this appliance have to withstand extreme physical conditions such as temperatures below -20°C.

DO'S AND DON'TS

Do- Clean and defrost your appliance regularly (see "DEFROSTING").
Do- Keep raw meat and poultry below cooked food and dairy products.
Do- Take off any unusable leaves on vegetables and wipe off any soil.
Do- Leave lettuce, cabbage, parsley and cauliflower on the stem.
Do- Wrap cheese firstly in greaseproof paper and then in a polythene bag excluding as much air as possible. For best results take out of the fridge compartment an hour before eating.
Do- Wrap raw meat and poultry loosely in polythene or aluminium foil. This prevents drying.
Do- Wrap fish and offal in polythene bags.
Do- Wrap food which have a strong odour or can dry out in polythene bags, aluminium foil or place in an airtight container.
Do- Wrap bread well to keep it fresh.
Do- Chill white wines, beer, lager and mineral water before serving.
Do- Check contents of the freezer every so often.
Do- Keep food for as short a time as possible and adhere to "Best Before", "Use by" etc. dates.
Do- Store commercially frozen food in accordance with the instructions given on the packets that you buy.
Do- Always choose high quality fresh food and be sure it is thoroughly clean before you freeze it.
Do- Prepare fresh food for freezing in small portions to ensure rapid freezing.
Do- Wrap all food in aluminium foil or freezer quality polythene bags and make sure any air is excluded.
Do- Wrap frozen food when you buy it and put it in to the freezer as soon as possible.
Do- Defrost food in the fridge compartment.
Do- Remove ice cream from the freezer 10-20 minutes before serving.

Don't- Store bananas in your fridge compartment.
Don't- Store melon in your fridge. It can be chilled for short periods as long as it is wrapped to avoid it flavouring other food.
Don't- Store poisonous or any dangerous substances in your appliance. It has been designed for the storage of edible foodstuffs only.
Don't- Consume food which has been stored for an excessive time in the fridge.
Don't- Store cooked and fresh food together in the same container. They should be packaged and stored separately.
Don't- Let defrosting food or food juices drip onto food.
Don't- Leave the door open for long periods as this will make the appliance more costly to run and cause excessive ice formation.
Don't- Use pointed sharp edged objects such as knives, forks to remove the ice.
Don't- Put hot food into the appliance. Let it cool down first.
Don't- Put liquid-filled bottles or sealed cans containing carbonated liquids into the freezer as they may burst.
Don't- Exceed the maximum freezing loads (**4.25** kg in any 24 hours) when freezing fresh food.
Don't- Give children ice-cream and water ices direct from the freezer. The low temperature may cause 'freezer burns' on lips.
Don't- Freeze fizzy drinks.
Don't- Try to keep frozen food which has thawed, it should be eaten within 24 hours or cooked and refrozen.
Don't- Remove items from the freezer with wet hands.
Don't- Close the freezer door before placing the compartment cover in its place.
Don't- Leave frozen food at room temperature to thaw; the best way to defrost food is to put it in the fridge to thaw slowly. Make sure you avoid defrosting food or food juices drip onto other food.

ENERGY SAVING TIPS

1- Ensure your appliance is installed in a well ventilated area. If the ambient temperature is low (but in no case lower than **10** degrees C), then the energy saving will be more. In this case, check temperatures of fridge and freezer compartments with an accurate thermometer and lower the temperature setting if necessary.
2- Ensure the time between buying chilled/frozen food and placing them in your appliance is kept at minimum, particularly in summer. We recommend you use a cool bag or a special carrier bag to carry frozen food.
3- Do not leave the door (s) of your appliance open longer than necessary and ensure they are closed properly after each opening.
4- Defrost your appliance regularly (see "DEFROSTING").
5- Defrost frozen food in the fridge compartment, so that frozen food acts as an ice pack to assist cooling in the fridge.

PROBLEM SOLVING

If the appliance does not operate, check whether:
• The plug is inserted properly in the socket and that the power supply is on. (To check the power supply to the socket, plug in another appliance).
• The fuse has blown/circuit breaker has tripped/main distribution switch has been turned off.
• The temperature control has been set correctly.
• New plug is wired correctly if you have changed the fitted moulded plug.
If the appliance is still not operating after the above checks, please refer to the section on "**How to Obtain Service**".
Please ensure that above checks have been made as a charge will be made if no fault is found.

INSTALLATION INSTRUCTIONS
DETAILED STEP BY STEP

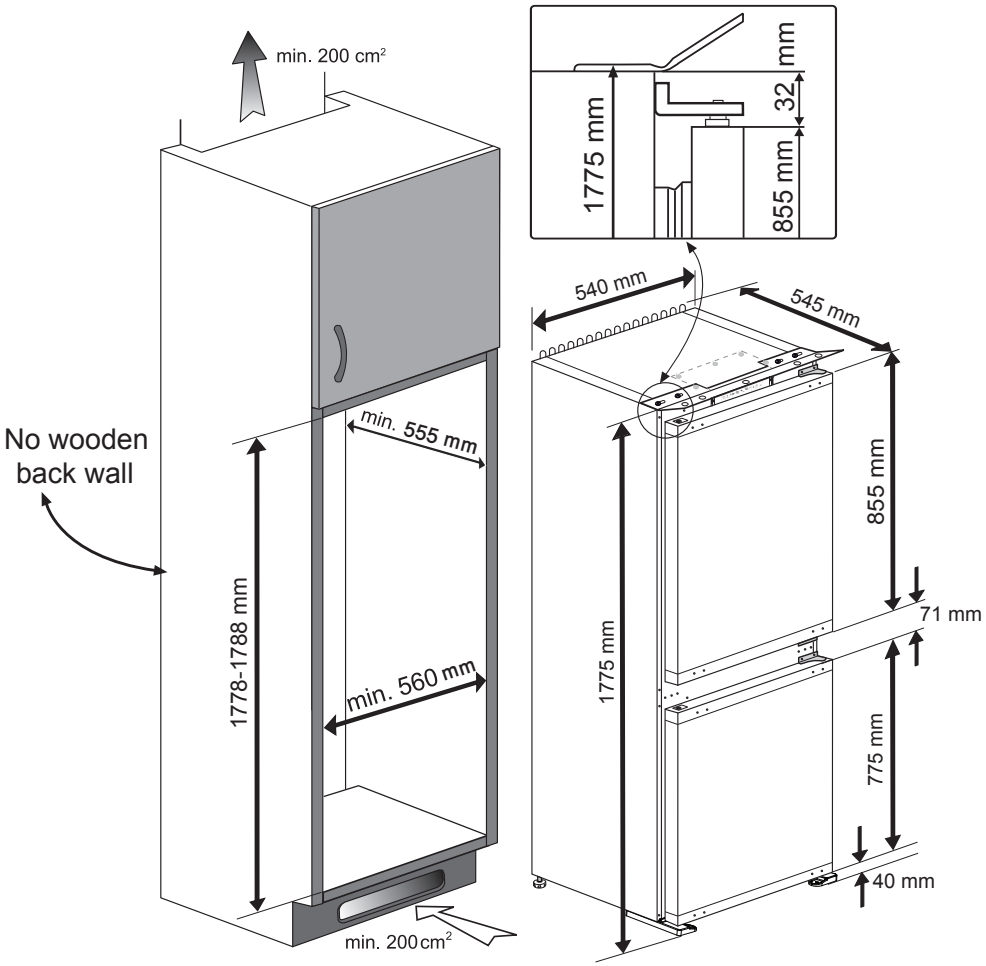

The back wall of the wooden cabinet must be left open completely to kitchen wall in order to allow sufficient air circulation to cool down the condenser unit for energy efficiency.

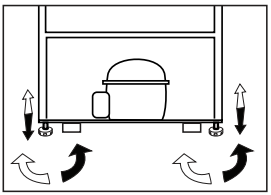

Adjusting the legs

If your refrigerator is unbalanced:

You can balance your refrigerator by turning the legs of it as illustrated in the figure. The corner where the leg exists is lowered when you turn in the direction of black arrow and raised when you turn in the opposite direction. Taking help from someone to slightly lift the refrigerator will facilitate this process.

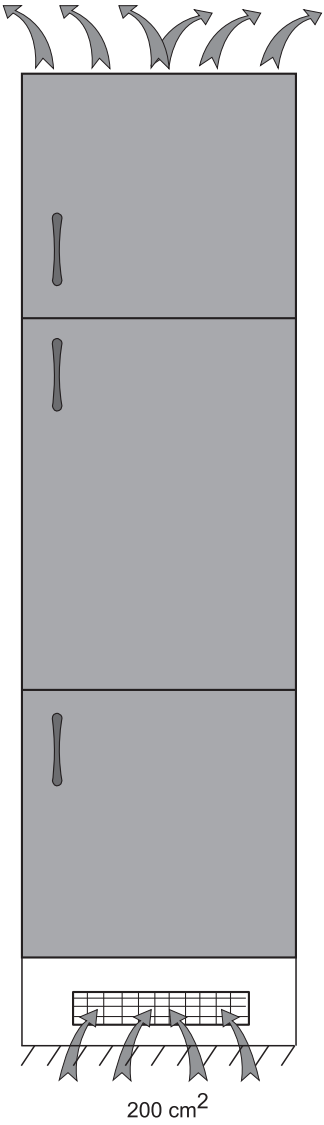
200 cm2

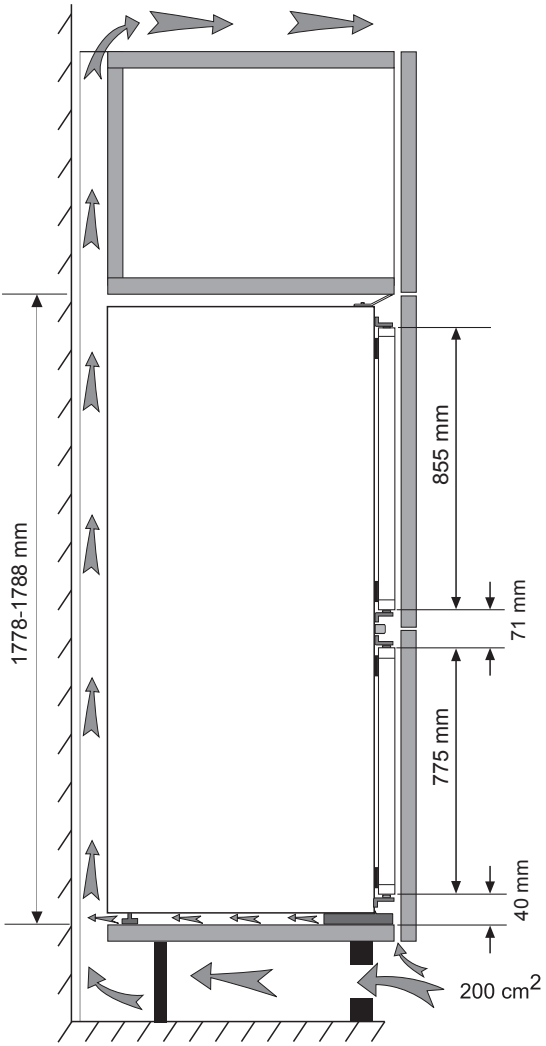
1778-1788 mm
855 mm
71 mm
775 mm
40 mm
200 cm2

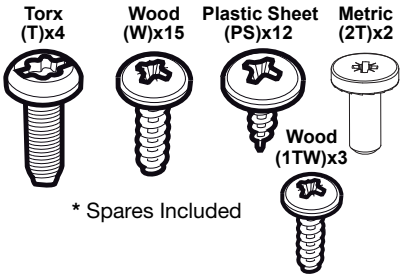

* Spares Included

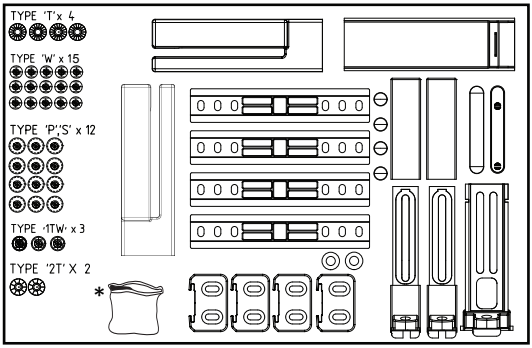

* If the subject parts are not included in the product you have purchased, then it is valid for other models.

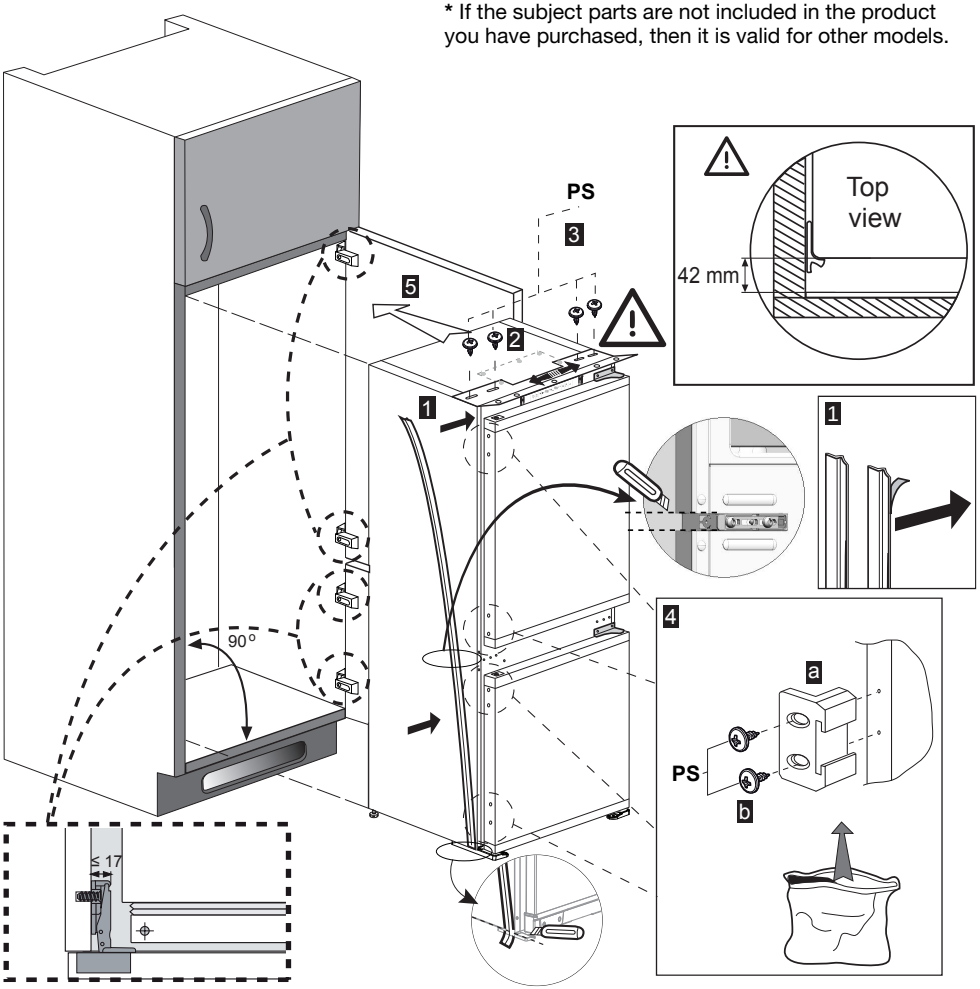

Note: Installation step for 2, screws for connecting top plastic part should not be screwed very hard, because of moving the plastic part easily left or right side.

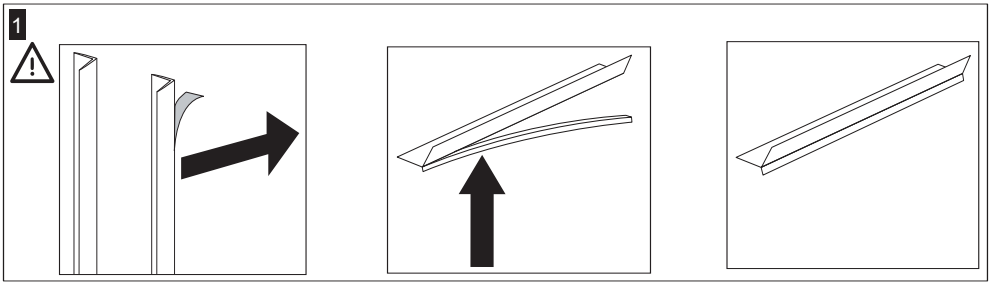
1

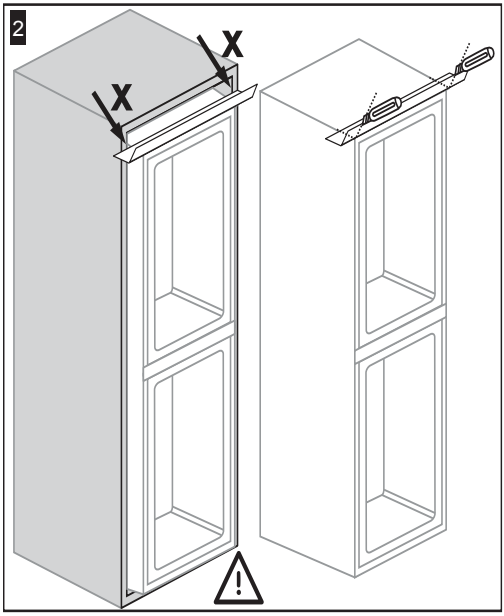
2
X
X

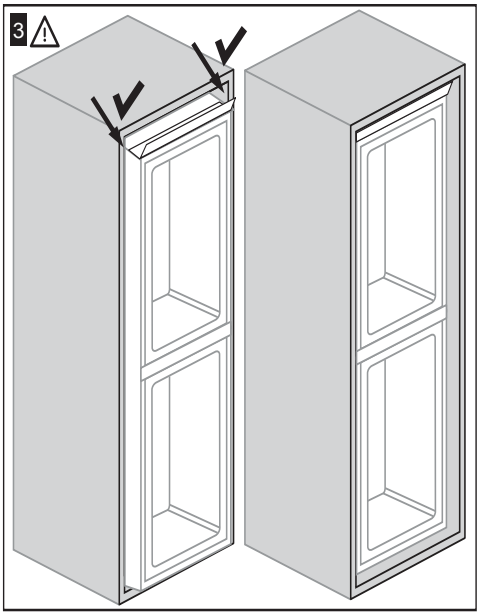
3

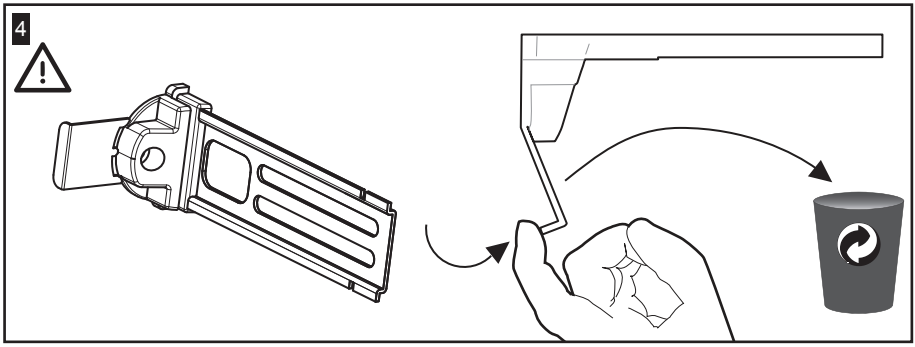
4

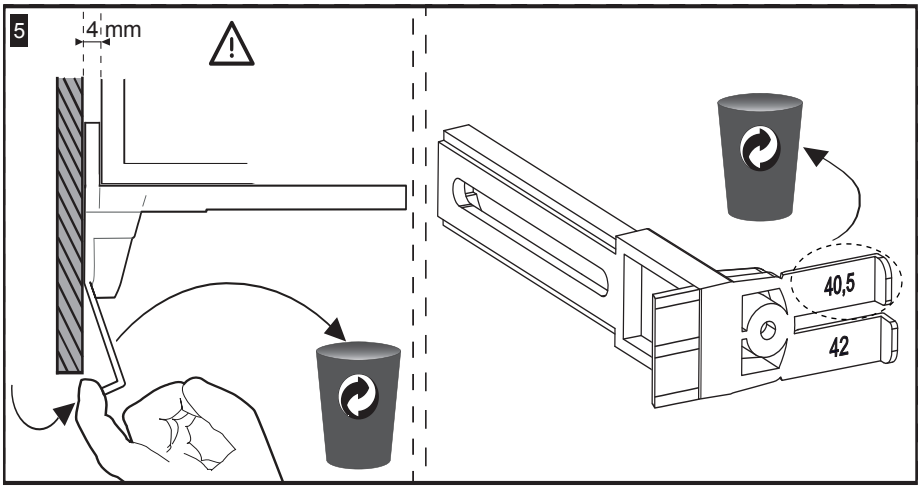
5
4 mm
40,5
42

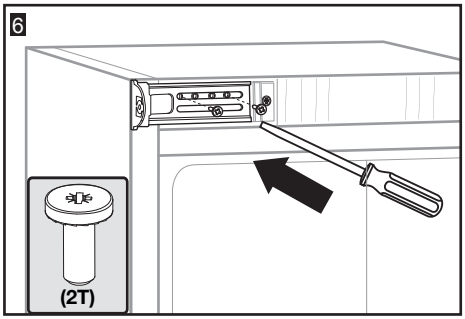
6
(2T)

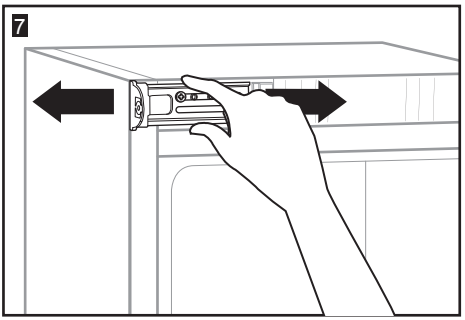
7

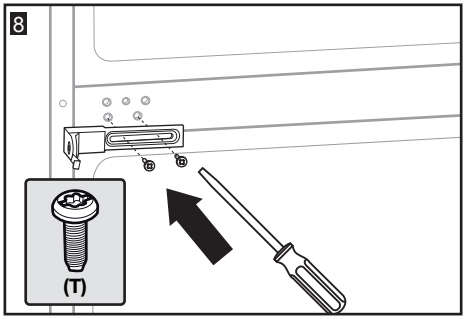
8
(T)

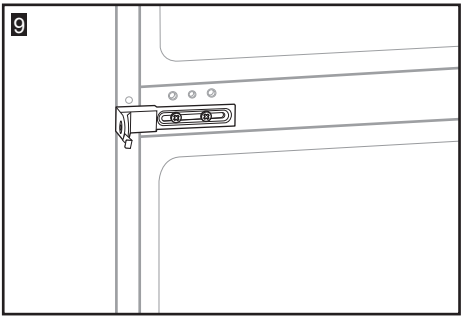
9

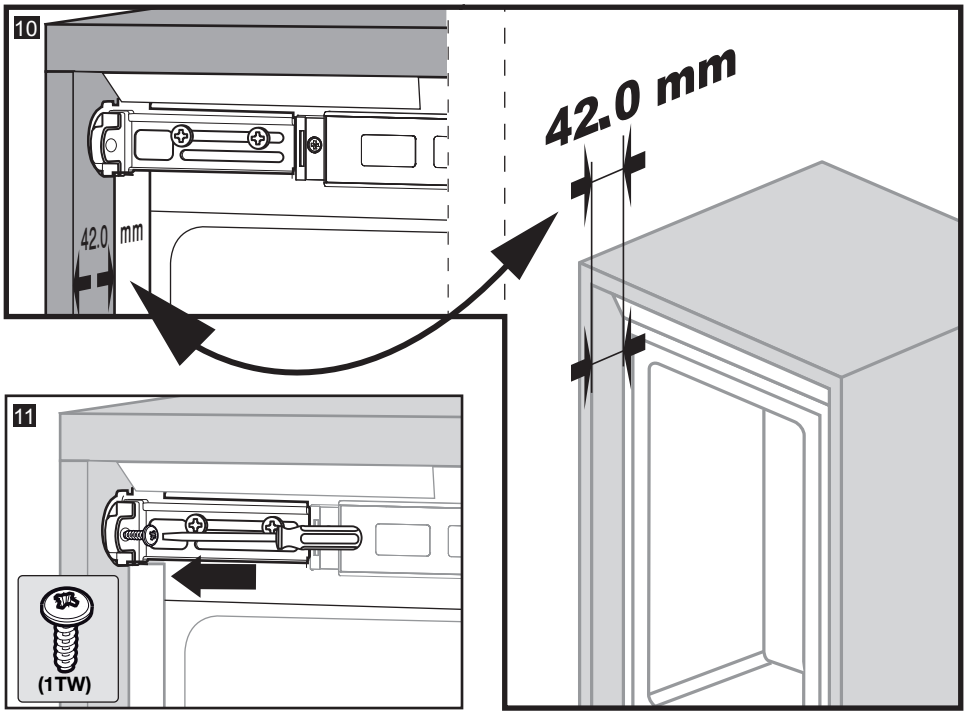
10
42.0 mm
42.0 mm
11
(1TW)

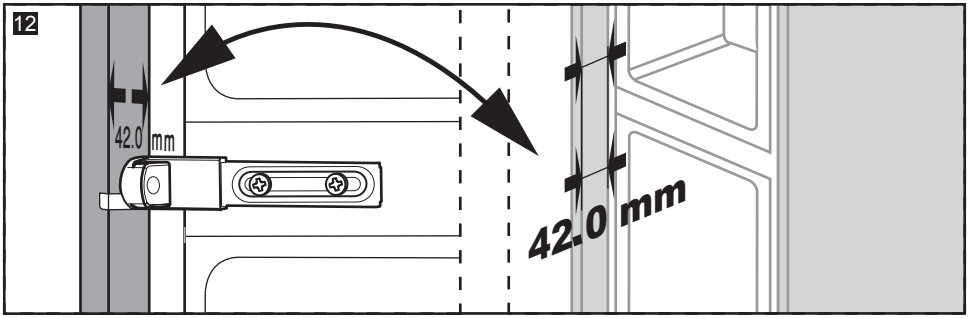
12
42.0 mm
42.0 mm

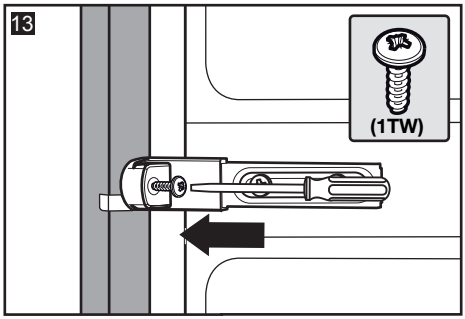
13
(1TW)

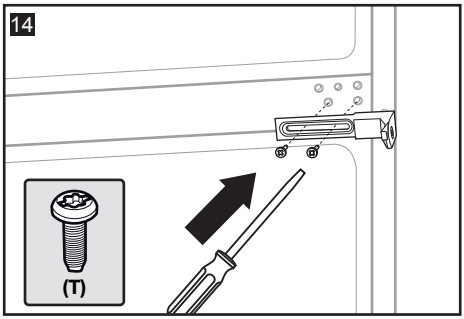
14
(T)

15

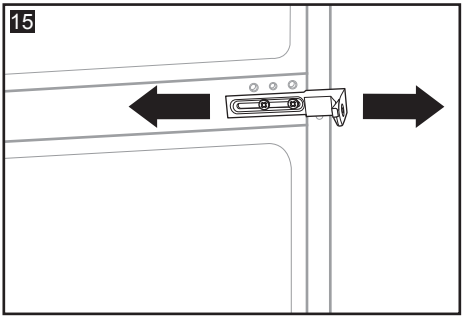

16

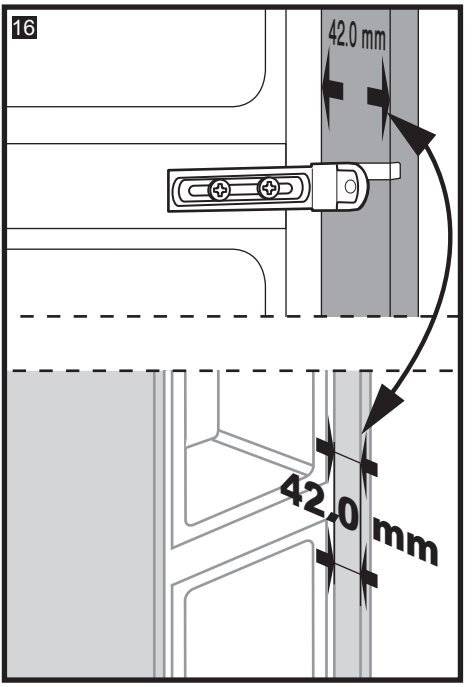

17

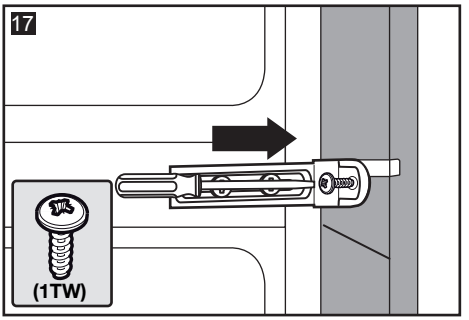

18

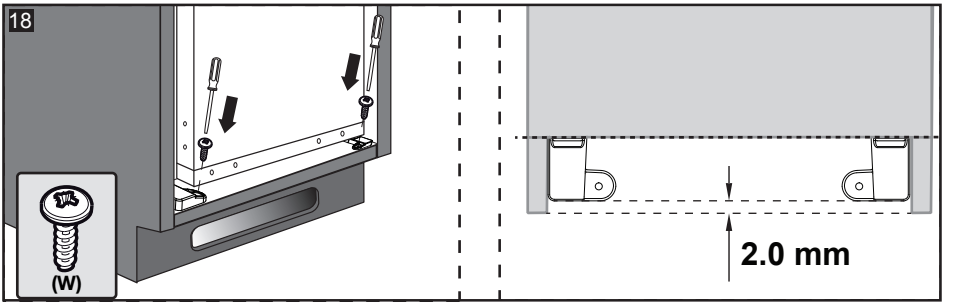

19

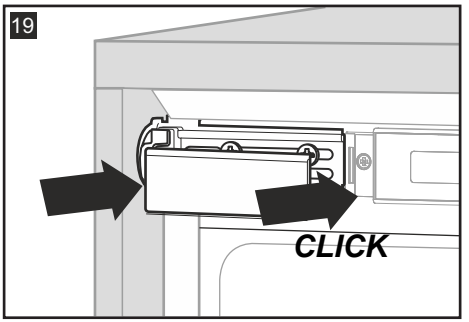

20

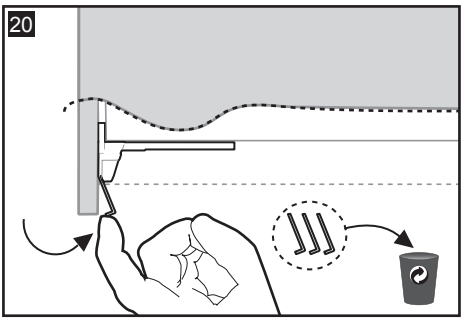

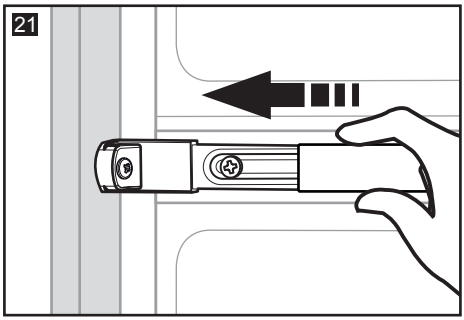
21

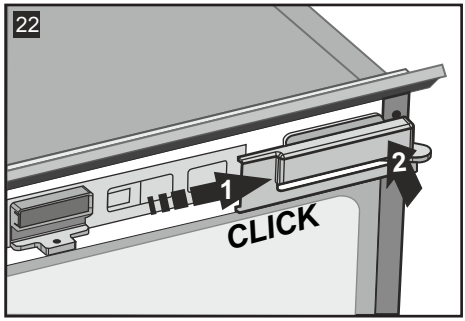
22
1
2
CLICK

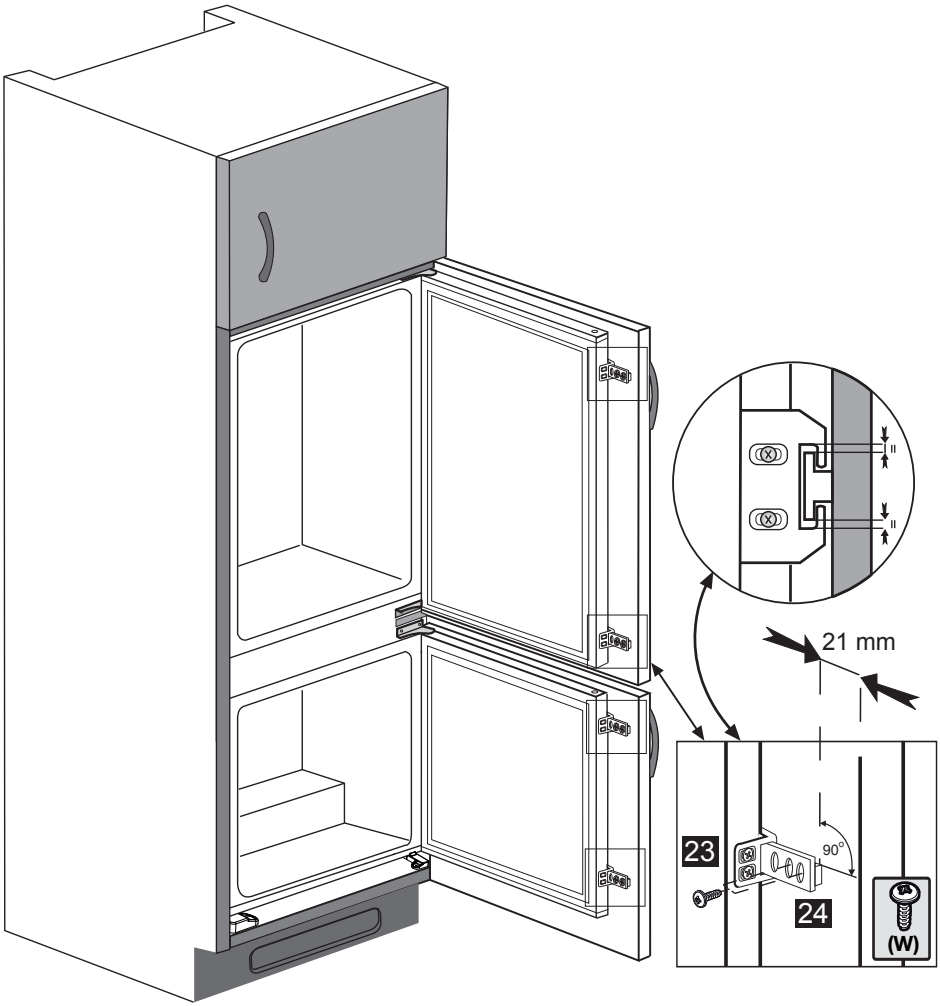
21 mm
23
90°
24
(W)

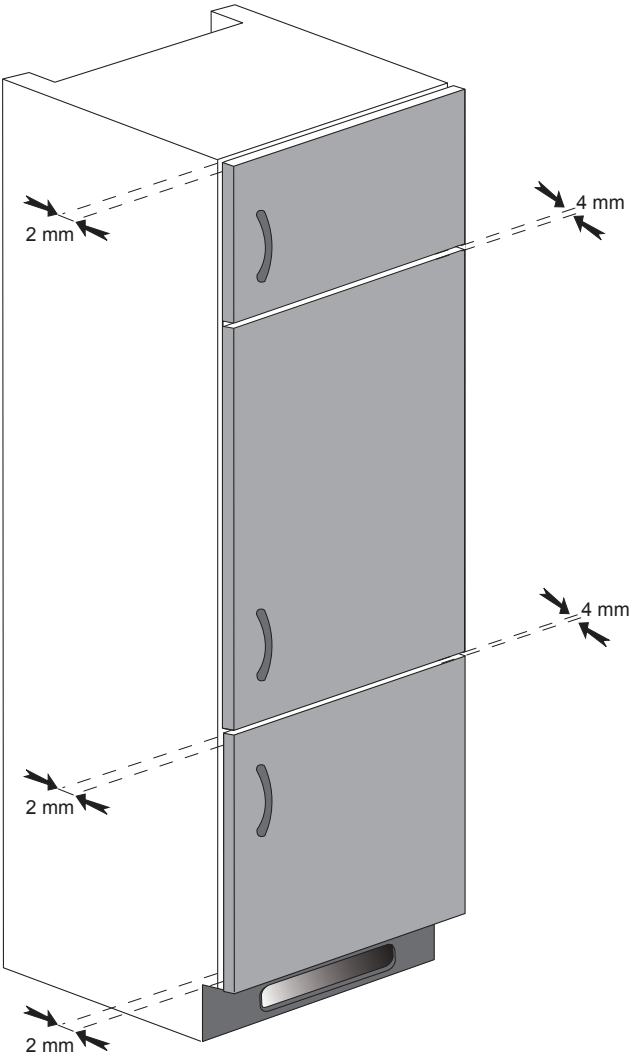
2 mm
4 mm
4 mm
2 mm
2 mm

REVERSING THE DOORS

Proceed in numerical order.

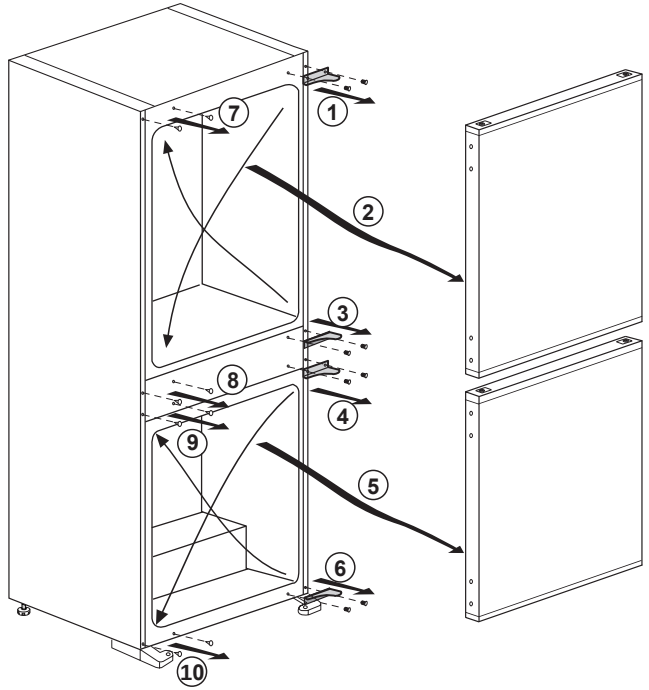

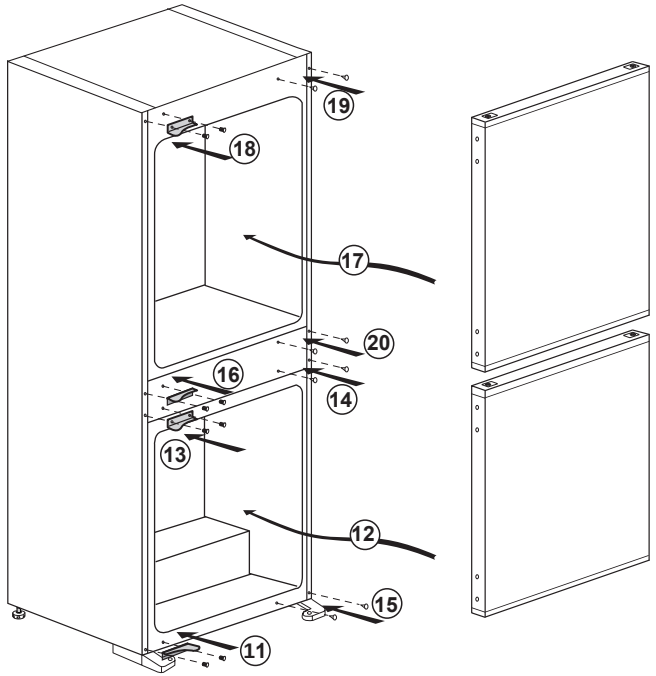

INSTALLATION OF HIGH LEVELLING FOOT

(All dimensions are in mm)

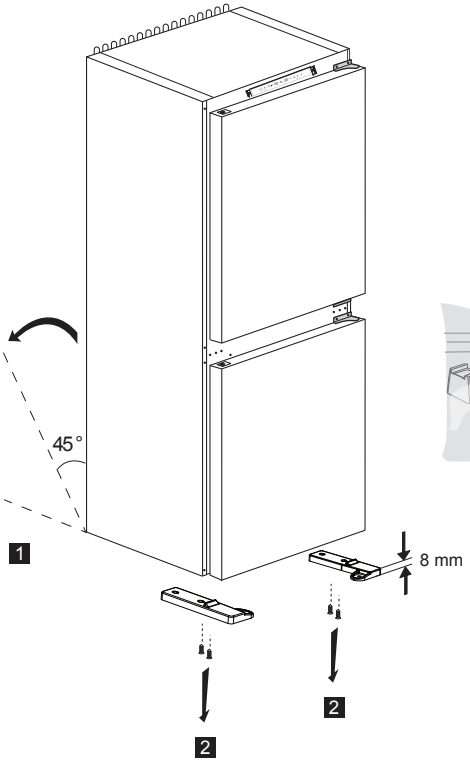



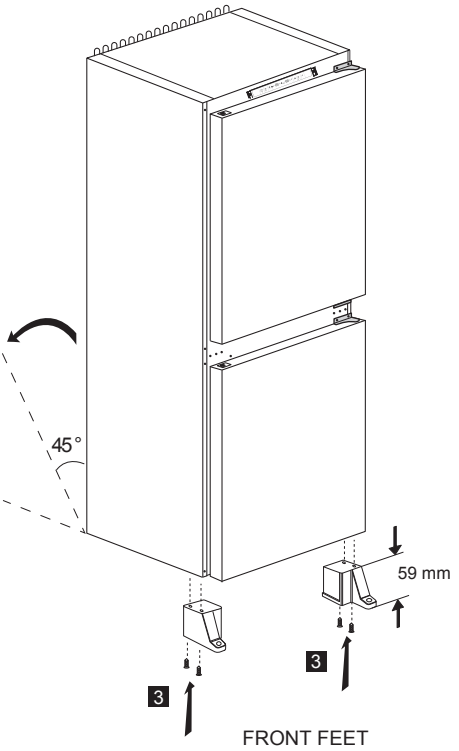

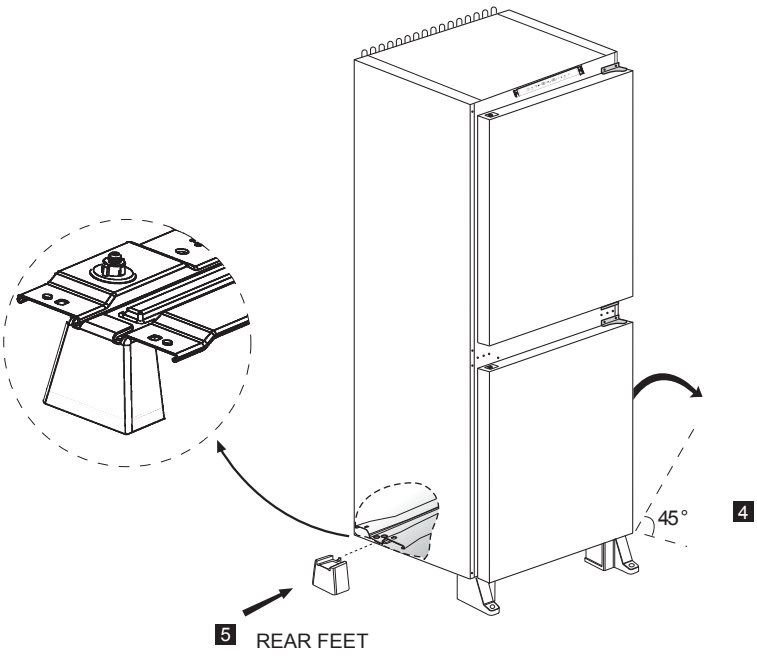
45°
4
5
REAR FEET

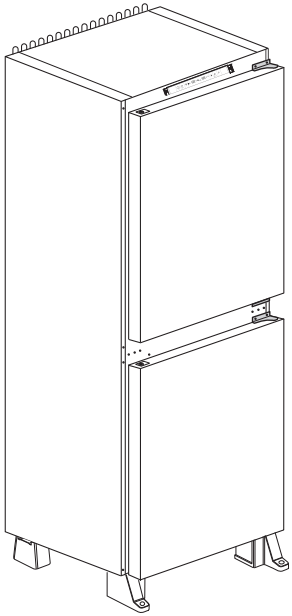

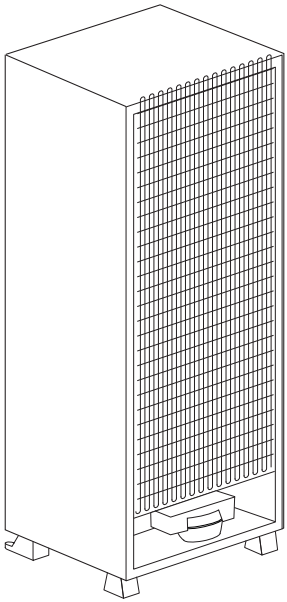

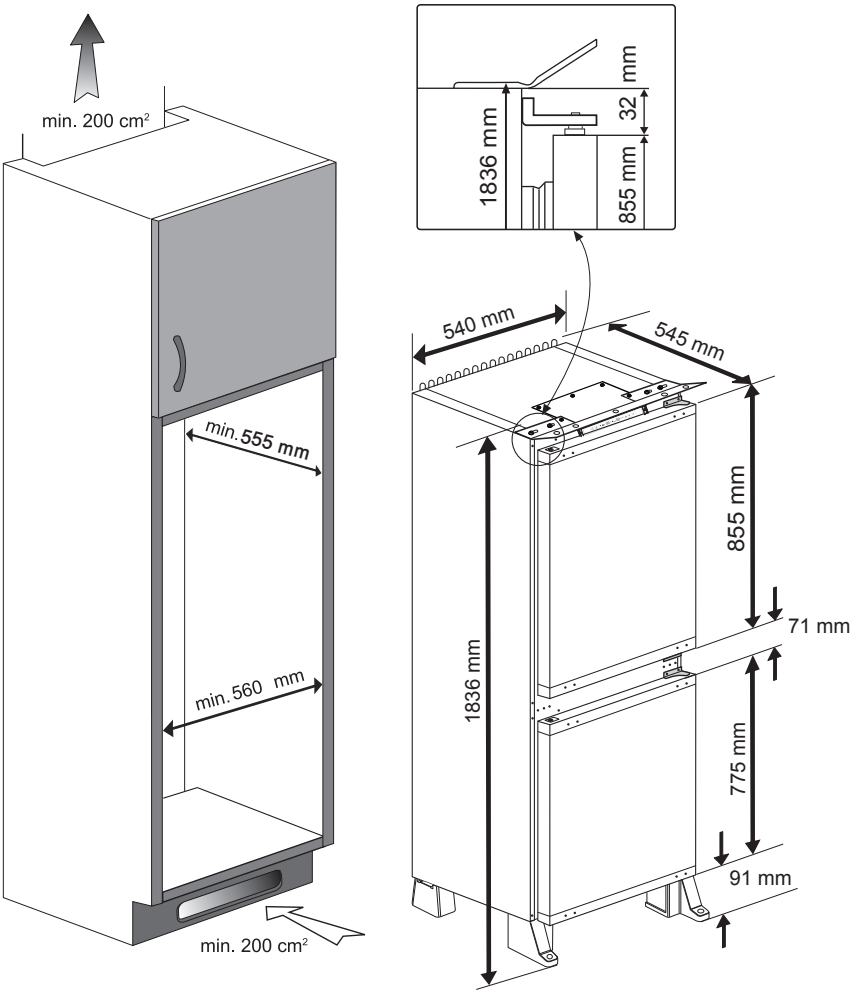
min. 200 cm²
min. 555 mm
min. 560 mm
min. 200 cm²
1836 mm
32 mm
855 mm
540 mm
545 mm
855 mm
71 mm
1836 mm
775 mm
91 mm

GRUNDIG UK AND IRELAND STANDARD MANUFACTURER GUARANTEE TERMS AND CONDITIONS

Your new Grundig product is guaranteed against faulty materials, defective components or manufacturing defects.

The standard guarantee starts from the date of original purchase of the product, and lasts for a period of thirty six (36) months unless Beko plc (the "Manufacturer") agrees to extend the guarantee for the product in writing.

If you have registered the product within 90 days of purchase by completing the online registration form, then the standard 36 month guarantee will be extended to 60 months, under the same terms and conditions as detailed below.

If you have any questions about the guarantee on your product (including how long it is valid), please contact your retailer or our contact centre on **0333 207 9920** (UK and Northern Ireland) or **01 691 0203** (Republic of Ireland).

This guarantee does not in any way diminish or affect your statutory rights in connection with the product. This guarantee is in addition to your statutory rights as a consumer. If you have any questions about these rights, please contact the retailer from which you purchased the product. In certain circumstances, it is possible that your statutory rights may offer additional or higher levels of protection than those offered under the terms of this guarantee.

What is covered by this guarantee?

- Repairs to the product required as a result of faulty materials, defective components or manufacturing defects.
- Functional replacement parts to repair a product.
- The costs of a Grundig Approved Engineer to carry out the repair.

What is not covered?

- Transit and delivery damage.
- Cabinet or appearance parts, including but not limited to control knobs, flaps and handles.
- Accessories and/or consumable items including but not limited to ice trays, scrapers, cutlery baskets, filters and light bulbs.
- Repairs necessary as a direct or indirect result of:
    - Accidental damage, misuse or abuse of a product.
    - An attempted repair of a product by anyone other than a Grundig Approved Engineer (the "Engineer").
    - Installation or use of a product where such installation or use fails to meet the requirements contained in this guarantee or the User Instructions Booklet.
- Repairs to a product operated at any time on commercial or non-residential household premises (unless we have previously agreed to the installation environment).

This guarantee is limited to the cost of repairing the product. To the extent permitted by law, the Manufacturer does not accept and will not be held liable for any financial loss incurred in connection with the failure of any product to operate in accordance with the expected standards. Such financial loss includes but is not limited to loss arising from:

- Time taken off work.
- Damaged food, clothing or other items.
- Meals taken at restaurants or from takeaways.
- General compensation for inconvenience.

Important Notes

1. Your product is designed and built for domestic household use only.
2. The guarantee will automatically be void if the product is installed or is used in commercial or non-residential domestic household premises, unless we have previously agreed to the installation environment.
3. The product must be correctly installed, located and operated in accordance with the instructions contained in the User Instructions Booklet provided with your product.
4. Professional installation by a qualified Electrical Domestic Appliance Installer is recommended for all Washing Machines, Dishwashers and Electric Cookers (as incorrect installation may result in you having to pay for the cost of repairing the product).
5. Gas Cookers must be professionally installed by a Gas Safe (or Gas Networks Ireland for Republic of Ireland) registered gas installer.
6. This guarantee is given in respect of products purchased and used within the United Kingdom and the Republic of Ireland.
7. This guarantee is effective from the initial date of purchase of a new product from an authorised retailer and will be void if the product is resold.
8. This guarantee does not apply to graded sales (where the product is purchased as a "second").
9. Possession of a copy of these terms and conditions does not necessarily mean that a product has the benefit of this guarantee. If you have any questions, please call our Call Centre on the number set out above.

10. The Manufacturer reserves the right to terminate the guarantee if its staff or representatives are subjected to physical or verbal abuse in the course of carrying out their duties.
11. Optional extras, where available (i.e. extendable feet) are supplied on a chargeable basis only.

Does Grundig offer replacements?

This is a repair-only guarantee. On occasion, the Manufacturer may at its sole discretion, replace your product with a new product instead of carrying out a repair. Where a replacement is offered, this would normally be an identical model but when this is not possible, a model of similar specification will be provided. The Manufacturer will cover the costs and arrange for the delivery of the new product and for the return of the old product. Any costs related to disconnecting the faulty product and installing the replacement product will not be borne by the Manufacturer unless previously agreed to in writing. The original guarantee will continue to apply to the replacement product; the new product will not come with a new guarantee.

When will the repair take place?

Our Engineers work Monday to Friday 9.00am to 5.00pm. Appointments outside these hours may be possible at the sole discretion of the Manufacturer but cannot be guaranteed. Whilst our Engineers will endeavour to minimize inconvenience and to meet requests for specific timed appointments, this cannot be guaranteed. We will not be liable for delays or if it is unable to carry out a repair because a convenient appointment cannot be arranged.

Will there be any charge for the repairs?

It is your responsibility to provide evidence to the Engineer that your product is covered by this guarantee with a proof of purchase. The Manufacturer reserves the right to charge for the reasonable cost of any service call if:

- You cannot provide evidence that your product is covered by this guarantee.
- Where a service call has been made and the engineer finds that there is no fault with your product.
- That your product has not been installed or operated in accordance with the User Instructions Booklet.
- That the fault was caused by something other than faulty materials, defective components or manufacturing defects.
- For missed appointments.

Payment of these costs are due immediately upon the Engineer providing you with an invoice. The Manufacturer reserves the right to terminate the guarantee if you fail to pay the costs for the service call in a timely manner.

If you are a resident of the United Kingdom, this guarantee will be governed by English law and subject to the English Courts, save where you live in another part of the United Kingdom, in which case the law and courts of that location will apply.

If you are resident in the Republic of Ireland, this guarantee will be governed by Irish law and the Irish courts will have jurisdiction.

This guarantee is provided by Beko plc. Beko House, 1 Greenhill Crescent, Watford, Hertfordshire. WD18 8QU.

Beko plc is registered in England and Wales with company registration number 02415578.

GRUNDIG UK AND IRELAND ECO INVERTER MOTOR GUARANTEE TERMS AND CONDITIONS

This 10 year guarantee relates to Grundig products that feature the Eco Inverter Motor.

The Eco Inverter Motor guarantee terms and conditions are in addition to our Standard guarantee terms and conditions detailed in the previous section.

In order to activate the 10 year guarantee you MUST register the appliance within 90 days of the original purchase date. You can register by first visiting grundig.co.uk/register and by following the online instructions.

Grundig Free standing and Built-in appliances come with a 36 month parts and labour guarantee as standard, which can be extended to a 60 months parts and labour guarantee by registering within 90 days of the original purchase date.

To make a claim against your Grundig Eco Inverter Motor Guarantee (the “Guarantee”), all customer and product details must be registered with Beko plc using the procedure outlined below.

1. This extra 7 years (or 5 years for appliances registered within 90 days of the original purchase date) Guarantee is only effective after the expiration of the standard manufacturer’s guarantee.
2. It is only valid for the Eco Inverter motors of selected washing machines, washer-dryers, tumble dryers and dishwashers. It does not cover any labour charge or any other components of the product. In addition, it is only valid for one replacement of the Eco Inverter motor during the extra 7 years (or 5 years for appliances registered within 90 days of the original purchase date) guarantee period.
3. To activate your guarantee, you MUST register your appliance within 90 days of the original purchase date, by visiting Grundig.co.uk/register.
4. Customers will receive a unique reference code as proof of guarantee validation by email or post, which must be quoted at the time of a claim being made.
5. Any repair/replacement of the Eco Inverter motor must only be carried out by an authorised Grundig Service Agent (the “Service Agent”).
6. Labour for the repair/replacement of the Eco Inverter motor is not included in this guarantee and is chargeable directly by the Service Agent.
7. Any additional components fitted to the product at any time will not be covered by this guarantee and will be chargeable directly by the Service Agent.
8. The guarantee is not transferable and cannot be exchanged for cash.
9. There are no alternative or additional offers to this Guarantee.
10. The guarantee is exclusive of the manufacturer’s standard guarantee.
11. The Terms and Conditions shown above are in addition to the standard terms and conditions of your product guarantee. Please read and refer to such Terms and Conditions when making any claim.
12. We may use the information you provide for marketing purposes and to analyse your purchasing preferences. We may keep your information for a reasonable period for these purposes in accordance with the applicable Data Protection Laws and General Data Protection Regulations (GDPR). You can opt into this service during the registration process. Further details are available at http://www.Grundig.co.uk/cookie-and-privacy.
13. These Terms and Conditions are governed by the laws of England and Wales; manufacturer: Beko plc, Beko House, 1 Greenhill Crescent, Watford WD18 8QU. Company Registration Number: 02415578.

HOW TO OBTAIN SERVICE FOR YOUR APPLIANCE

Please keep your purchase receipt or other proof of purchase details in a safe place; you will need to have this documentation available should the product require attention under guarantee.

Please take a few moments to complete the details below, as you will need this information when you call us, or to use our online services. When you call us you may be required to input your serial number into your telephone keypad. For help please visit grundig.co.uk/support/model-finder.

- The product model number is printed on the Operating Instruction Booklet / User guide.
- The product model and serial number is printed on the Rating Label affixed to the appliance.
- The Retailer (Purchased from) and Date of purchase will be printed on your purchase receipt or other proof of purchase paperwork.

Recording of these details alone will not count as proof of purchase. A valid proof of purchase is required for requesting service under guarantee.

Model number	Serial number	Purchased from	Date of purchase

For service under guarantee or for product advice please call our Contact centre

Before requesting service please check the troubleshooting guide in the Operating Instructions booklet, as a charge may be levied where no fault is found, and even though your product may still be under guarantee.

After arranging service the area around the product must be easily accessible to the Engineer, without the need for cabinets or furniture to be removed or moved.

It is your responsibility to ensure our Engineers have a clean and safe environment to carry out any repairs.

Please have your Model number and Serial number available when you call us, as you may be required to input your serial number into your telephone keypad during your call.

UK Mainland & Northern Ireland:

0333 207 9920

Landline or mobile calls to 0333 numbers cost no more than calls to geographic numbers 01 or 02, and are charged at the basic rate. Calls from landlines and mobiles are included in free call packages but please check with your telephone service provider for exact call charges.

Republic of Ireland:

01 691 0203

Service once the manufacturers guarantee has expired

If you have purchased an extended guarantee please refer to the instructions contained within the extended guarantee agreement document, otherwise please call us using the appropriate number above, where service can be obtained at a charge.

Should you experience any difficulty in obtaining service please call us on **0333 207 9920** or **01 691 0203.**

Contact us though our website

Send us a secure message through our online contact us form. Please visit our website, click Contact Us and choose a product support topic from the list of options. Complete the required details and click send message.

Product registrations

For UK and Republic of Ireland product registrations please visit grundig.co.uk/register.

Recycling



This product bears the selective sorting symbol for waste electrical and electronic equipment (WEEE).
This means that this product must be handled pursuant to European Directive 2002/96/EC in order to be recycled or dismantled to minimize its impact on the environment.
For further information, please contact your local or regional authorities.

Electronic products not included in the selective sorting process are potentially dangerous for the environment and human health due to the presence of hazardous substances.

Grundig
1 Greenhill Crescent
Watford
HERTS
WD18 8QU
Tel: 0845 603 1234
Fax: 0845 600 4922 www.grundig.co.uk

www.grundig.co.uk
4578337789_AA