FRIGIDAIRE

frigidaire.com/register

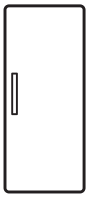

**EN** User Manual | **Refrigerator**

**Welcome to our family**

Thank you for bringing Frigidaire into your home! We see your purchase as the beginning of a long relationship together.

This manual is your resource for the use and care of your product. Please read it before using your appliance. Keep it handy for quick reference. If something doesn't seem right, the troubleshooting section will help you with common issues.

FAQ, helpful tips and videos, cleaning products, and kitchen and home accessories are available at **http://www.frigidaire.com**.

We are here for you! Visit our website, chat with an agent, or call us if you need help. We may be able to help you avoid a service visit. If you do need service, we can get that started for you.

Let's make it official! Be sure to register your product.

## CONTENTS


**1.** IMPORTANT SAFETY INFORMATION..... 2
**2.** FEATURES ..... 5
**3.** INSTALLATION ..... 6
**4.** DOOR REMOVAL ..... 8
**5.** DOOR HANDLE INSTALLATION ..... 8
**6.** CONTROLS AND SETTINGS ..... 9
**7.** STORAGE FEATURES ..... 11
**8.** FILTER REPLACEMENT ..... 12
**9.** CARE AND CLEANING ..... 13
**10.** TROUBLESHOOTING..... 14
**11.** LIMITED WARRANTY..... 15


# 1. IMPORTANT SAFETY INFORMATION

## 1.1 Keep a record for quick reference

Model number

.....

Serial number

.....

Purchase date

.....

## 1.2 Serial number location

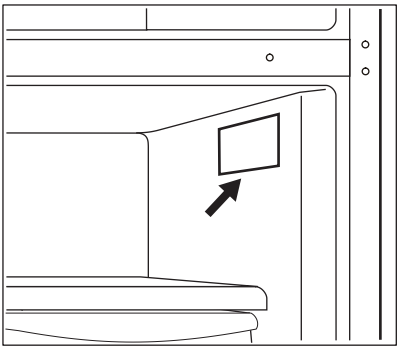

**⚠ WARNING!**

You must follow these guidelines to ensure that your refrigerator's safety mechanisms are operating correctly.

## 1.3 Safety definitions

⚠

This is the safety alert symbol. It is used to alert of potential personal injury hazards. Obey all safety messages that follow this symbol to avoid possible injury or death.

**⚠ DANGER**

DANGER indicates an imminently hazardous situation which, if not avoided, will result in death or serious injury.

**⚠ WARNING!**

WARNING indicates a potentially hazardous situation which, if not avoided, could result in death or serious injury.

**⚠ CAUTION!**

CAUTION indicates a potentially hazardous situation which, if not avoided, may result in minor or moderate injury.

**➔ IMPORTANT**

IMPORTANT indicates installation, operation or maintenance information which is important but not hazard-related.

**⚠ DANGER**

DANGER Risk of fire or explosion. Flammable refrigerant used. Do not use mechanical devices to defrost refrigerator. Do not puncture refrigerant tubing.
DANGER Risk of fire or explosion. Flammable refrigerant used. To be repaired only by trained service personnel. Use only manufacturer-authorized service parts. Any repair equipment used must be designed for flammable refrigerants. Follow all manufacturer repair instructions. Do not puncture refrigerant tubing.

**⚠ CAUTION!**

CAUTION Risk of fire or explosion. Dispose of refrigerator properly in accordance with the applicable federal or local regulations. Flammable refrigerant used.
CAUTION Risk of fire or explosion due to puncture of refrigerant tubing. Follow handling instructions carefully. Flammable refrigerant used.

**⚠ WARNING!**

CALIFORNIA RESIDENTS ONLY
WARNING! Cancer and Reproductive Harm http://www.P65Warnings.ca.gov

## 1.4 Child safety

This appliance is not intended for use by persons (including children) with reduced physical, sensory or mental capabilities, or lack of experience and knowledge, unless they have been given supervision or instruction concerning use of the appliance by a person responsible for their safety.
Destroy or recycle the carton, plastic bags, and any exterior

wrapping material immediately after the refrigerator is unpacked.
Children should never use these items to play. Cartons covered with rugs, bedspreads, plastic sheets or stretch wrap may become airtight chambers, and can quickly cause suffocation.

## 1.5 Important safety instructions

Do not store or use gasoline or other flammable vapors and liquids in the vicinity of this or any other appliance.
Do not store explosive substances such as aerosol cans with a flammable propellant in this appliance.
Do not operate the refrigerator in the presence of explosive fumes
Avoid contact with any moving parts of automatic ice maker.
Remove all staples from the carton. Staples can cause severe cuts, and also destroy finishes if they come in contact with other appliances or furniture.

**⚠ WARNING!**

Do not use electrical appliances inside the food storage compartments of the appliance unless they are of the type recommended by the manufacturer.

## 1.6 Proper disposal of your refrigerator or freezer

**Risk of child entrapment**
Child entrapment and suffocation are not problems of the past. Junked or abandoned refrigerators or freezers are still dangerous – even if they will sit for “just a few days”. If you are getting rid of your old refrigerator or freezer, follow the instructions below to help prevent accidents.
We strongly encourage responsible appliance recycling/disposal methods. Check with your utility company or visit http://www.energystar.gov/recycle for more information on recycling your old refrigerator.
**Before you throw away your old refrigerator/freezer:**

- Remove doors.
- Leave shelves in place so children may not easily climb inside.
- Have it removed by a qualified service technician.

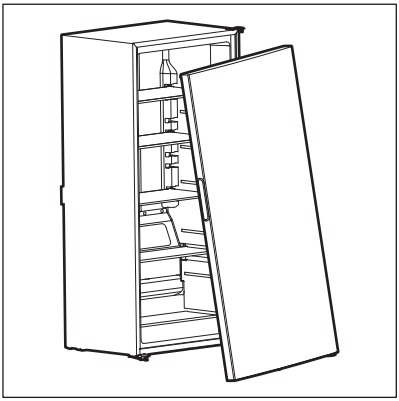

## 1.7 Electrical information

**➔ IMPORTANT**

Pressing and holding the On/Off button for three seconds, located on the temperature control panel, will disable the appliance cooling system but does not disconnect the power to the light bulb and other electrical components. To turn off power to the appliance you must unplug the power cord from the electrical outlet.

- The appliance must be plugged into its own dedicated 115 Volt, 60 Hz., 15 Amp, AC only electrical outlet. The

power cord of the appliance is equipped with a three-prong grounding plug for your protection against electrical shock hazards. It must be plugged directly into a properly grounded three-prong receptacle. The receptacle must be installed in accordance with local codes and ordinances. Consult a qualified electrician. Do not use an extension cord or adapter plug.

**⚠ WARNING!**

Avoid fire hazard or electric shock.

- If the power cord is damaged, it should be replaced by an authorized service technician to prevent any risk.
- Never unplug the appliance by pulling on the power cord. Always grip the plug firmly, and pull straight out from the receptacle to prevent damaging the power cord.
- Unplug the appliance before cleaning and before replacing the light bulb to avoid electrical shock.
- Performance may be affected if the voltage varies by 10% or more. Operating the appliance with insufficient power can damage the compressor. Such damage is not covered under your warranty.
- Do not plug the unit into an electrical outlet controlled by a wall switch or pull cord to prevent the appliance from being turned off accidentally.
- Do not pinch, knot, or bend the power cord in any manner.

**⚠ WARNING!**

When positioning the appliance, ensure the supply cord is not trapped or damaged.
Do not locate multiple portable socket-outlets or portable power supplies at the rear of the appliance.

**⚠ WARNING!**

Do not, under any circumstances, cut, remove, or bypass the grounding prong (A). Always use the power cord with a three-prong grounded plug and grounding type wall receptacle.

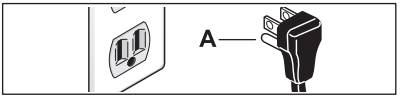


## 2. FEATURES

**➔ IMPORTANT**

Features may vary by model.
Accessories are available for your appliance and may be purchased at Frigidaire.com or by calling toll-free 1-800-374-4432.

### 2.1 Product overview

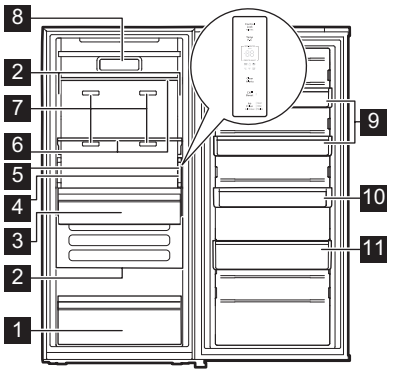


1. Lower Drawer with Removable Dividers
2. LED Lighting
3. CrispSeal Plus Drawer with Auto Humidity and Produce Keeper™
4. Temperature Sensor/Thermistor
5. Appliance Control Display
6. Adjustable Full Width Glass Shelves
7. Multi-Port Air Exhaust Ducts
8. Air Filter
9. Adjustable Half Gallon Door Bins with Removable Dividers
10. Adjustable Gallon Door Bin with Removable Divider
11. Adjustable Tall Item Door Bins with Removable Dividers

## 3. INSTALLATION

This User Manual provides general installation and operating instructions for your model. We recommend using a service or kitchen contracting professional to install your appliance. Use the appliance only as instructed in this User Manual. Before starting the appliance, follow these important first steps.

### 3.1 ✓ Installation Checklist

**Doors**
❒ Handles are secure and tight
**Leveling**
❒ Cabinet is setting solid on all corners
**Electrical Power**
❒ House power is turned on
❒ Appliance is plugged in
**Final Checks**
❒ Shipping material is removed
❒ Registration card is sent in

### 3.2 Tools necessary

These tools are necessary at different stages of the installation process:

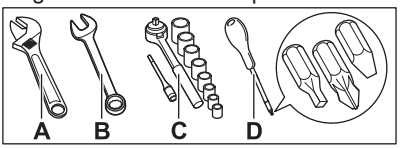


**A.** Adjustable Wrench
**B.** Fixed Wrench: 5/16"
**C.** Socket Wrench: Set
**D.** Screwdriver: Phillips™ Head or #2 Square Drive Head and Flat Head

### 3.3 Location

- If possible, place the appliance out of direct sunlight and away from the range, dishwasher, or other heat sources.
- The appliance must be installed on a floor that is level and strong enough to support a fully loaded appliance.

**⚠ WARNING!**

This appliance is intended for use in residential household and similar interior applications such as:
- Kitchen / kitchenette
- Pantry room
- Basement
- Enclosed garage
- Other interior residential type environments

## ⚠ WARNING!

Allow the following clearances for ease of installation, proper air circulation, plumbing, and electrical connections:

- Top 1" (25.4mm)
- Sides 3/16" (4.76mm)
- Back 1" (25.4mm)

### 3.4 Cabinet leveling and door alignment

Guidelines for final positioning of appliance:

- All 4 corners of the cabinet must rest firmly on the floor.

### 3.5 Minimum dimensions for Single Cabinet without Trim Kit

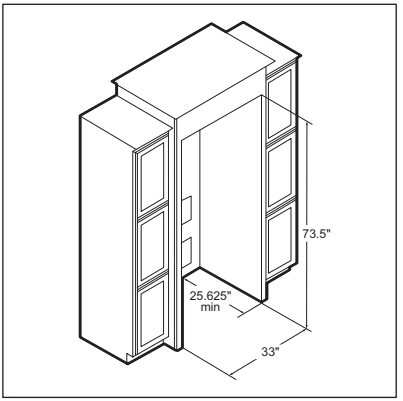


### 3.6 Setting the anti-tip brackets

The anti-tip brackets are located on the lower front corners of the cabinet. Lower the anti-tip brackets on each side clockwise until they contact the floor. Do not raise the cabinet.

## NOTE

The anti-tip bracket must be installed according to the instructions in the User Manual. Failure to do so may result in injury.

### 3.7 Lower Hinge Adjustment for Leveling the Doors of the Matching Refrigerator/Freezer Pair

To level the doors using the adjustable lower hinge (some models):

If the refrigerator door is lower than the freezer door, raise the refrigerator door by turning the adjustment screw counterclockwise using a 19mm socket wrench.

If the freezer door is lower than the refrigerator door, raise the freezer door by turning the adjustment screw counterclockwise using a 19mm socket wrench.

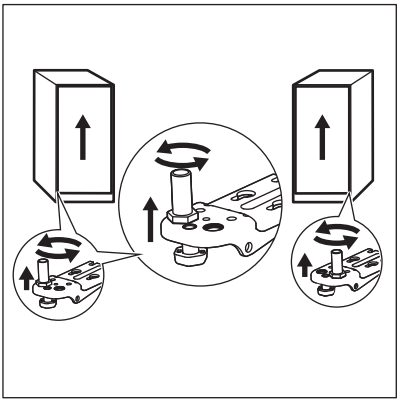

### 3.8 Pairing Installation

The installation of two appliances next to each other requires a pairing kit TWINSPAIRKIT.

To obtain it, contact the retailer where you purchased your appliances, or Frigidaire customer service at 1-800-374-4432 in the US, 1-800-265-8352 in Canada.

### 3.9 Single Unit Door Swing Reversal

Order the kit on Frigidaire.com or by calling 1-800-374-4432 (Frigidaire.ca or 1-800-265-8352 in Canada).

- Frig Pro TT Freezer: Left-hand to Right-hand Swing TTDRRVFFKIT2
- Frig Pro TT Refrigerator: Right-hand to Left-hand Swing TTDRRVFRKIT2

For models with gray interior walls:

- Frig Pro TT Grey Liner Freezer: Left-hand to Right-hand Swing TTDRRVGFKIT2
- Frig Pro TT Grey Liner Refrigerator: Right-hand to Left-hand Swing TTDRRVGRKIT2

**Dual Unit Door Reversal**

Moving the freezer door to the refrigerator also changes the right-hand swing to a left-hand swing.

Moving the refrigerator door to the freezer also changes the left-hand swing to a right-hand swing.

**NOTE**

Transfer the hinges and associated hardware in order to switch doors.

## 4. DOOR REMOVAL

### 4.1 Door Removal

**IMPORTANT**

Before you begin, remove the electrical power cord from the wall outlet. Remove any food from the door bins.

**⚠ CAUTION!**

Doors are heavy. Two people are recommended to remove or replace the door assembly from the cabinet.

**⚠ CAUTION!**

The appliance is heavy. Two people are required to lower and raise the cabinet.

**⚠ CAUTION!**

The door should be closed prior to removing or installing.

1. Turn off the power by unplugging the appliance or switching off its circuit breaker.
2. Remove the top hinge cover.

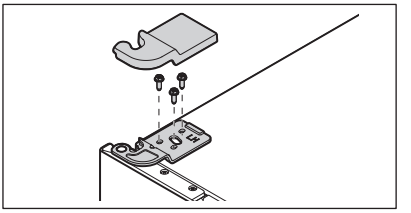

3. Support the door while removing the top hinge from the cabinet.
4. Use a wrench or socket to remove the M5x16mm hex head screws from the top hinge.
5. Lift the door upward, then pull it away from the cabinet to release it from the bottom hinge pin.
6. Reverse the preceding steps to reinstall the door. Tighten all screws to the specified torque to prevent hinge slippage.

When removing the door for transport, maintain a uniform 9mm gap between the cabinet frame and door metal around the entire perimeter to ensure proper gasket sealing and prevent frost buildup. Measure this 9mm clearance from cabinet metal to door metal at several points.

## 5. DOOR HANDLE INSTALLATION

**⚠ CAUTION!**

Wear gloves and safety goggles. Use extreme caution when installing these handles.
The rounded end of the handles may be sharp (some models).

### 5.1 Door handle installation

**NOTE**

Part quantities vary per model.

To install the door handle:

1. Position the handle over the handle mounts.

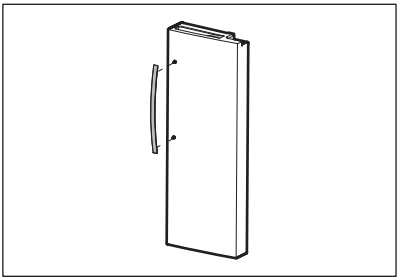

**2.** Turn the Allen set screw on the top of the handle clockwise using the Allen wrench. Tighten to secure the handle. Repeat for the bottom of the handle.

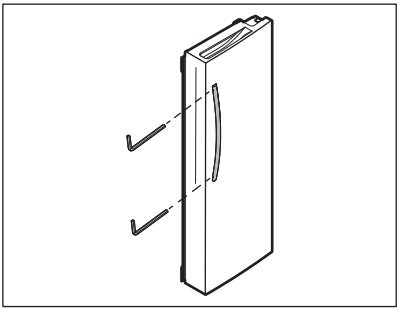

**IMPORTANT**

When tightening the Allen set screws, it is important to apply force to the longer arm of the Allen wrench. Tighten all set screws so the screw is below the surface of the handle. Draw the handles tight to doors with no gaps.

**NOTE**

The door handle may loosen over time or if it was installed improperly. If this happens, tighten the set screws on the handles.

# 6. CONTROLS AND SETTINGS

## 6.1 Controls and Settings

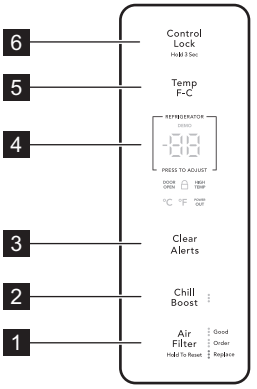


| | | |
|---|---|---|
| 1 | Air Filter button | Press and hold to reset after replacing the air filters. The status shown at the right of the button resets to Good. |

| | | |
|---|---|---|
| 2 | Chill Boost button | Prior to grocery shopping, activate Chill Boost to lower the temperature and chill food faster. Chill Boost stays active for up to 12 hours before automatic deactivation. You can turn it off manually by pressing Chill Boost. This restores the refrigerator to the previous temperature setting. |
| 3 | Clear Alerts button | Resets any active and illuminated alarms:<br>Door Open, High Temp, Power Outage. |
| 4 | Refrigerator compartment button | Select Refrigerator compartment to change the temperature.<br>Select + / - buttons to set the temperature.<br>Refrigerator control range: +33°F (+1°C) to +43°F (+6°C). |
| 5 | Temp F-C button | Touch to switch from Fahrenheit to Celsius. |
| 6 | Control Lock button | The lock prevents the display from unintended use. Press and hold the Lock button for 3 seconds to enable/disable.<br>While Lock is enabled, you cannot change settings on the display. Dispensing ice and water is disabled. When you interact with the display, the indicator flashes, and an audible warning tone sounds. |

**NOTE**

Recommended settings for the appliance installed in the kitchen is +37°F. It takes up to 24 hours to stabilize the temperature after adjusting.

## 6.2 Sabbath Mode

**NOTE**

While in Sabbath Mode, neither the lights, dispenser, nor the control panel will work until Sabbath Mode is deactivated. The appliance stays in Sabbath Mode after power failure recovery. It must be deactivated with the buttons on the control panel.

The Sabbath Mode is a feature that disables portions of the appliance and its controls in accordance with observance of the weekly Sabbath and religious holidays within the Orthodox Jewish community.

Sabbath Mode is turned on and off by simultaneously pressing and holding both the TEMP F-C and REFRIGERATOR for 5 seconds. The display shows Sb while in Sabbath mode.

In the Sabbath Mode, the High Temp alarm is active for health reasons. For example, if the door is left ajar the High Temp alarm is activated. The appliance will function normally once the door is closed, without any violation of the Sabbath/Holidays. The High Temp alarm is permitted when cabinet temperature is outside the safe zone for 20 minutes. The alarm silences itself after 10 minutes while the High Temp icon stays lit until the Sabbath mode is exited.




For further assistance, guidelines for proper usage and a complete list of models with the Sabbath feature, visit the web at star-k.org.

# 7. STORAGE FEATURES

## 7.1 Air Exhaust Ducts

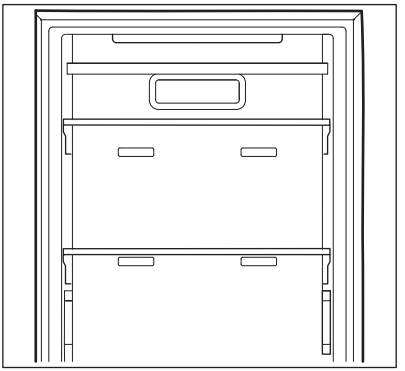

**➔ IMPORTANT**

Do not place items in front of the Multi-Port Air Exhaust Ducts or the Temperature Sensor as this will impact temperature performance. For more information refer to Features section.

## 7.2 Door Storage

Door bins, shelves, and racks conveniently store jars, bottles, and cans. You can quickly select frequently used items.

## 7.3 Full Width Cantilever Shelves

You can move Multi-position adjustable shelves to any position for larger or smaller packages. You may remove and discard the shipping spacers that stabilize the shelves for shipping.

To adjust the shelves:

1. Remove all food from the shelf.
2. Shelves are heavy. We recommend using both hands to install and remove the shelf. We recommend placing one hand centered on the front trim and the other hand centered under the rear of the shelf.
3. Lift the front edge up at a slight angle to release the tabs from the slots in the rear. Continue lifting the shelf vertically until the shelf clears the built-in shelf supports located on the sides of the cabinet. Then pull the shelf out.
4. Replace the shelf by inserting the mounting bracket hooks into the desired support slots at the rear.
5. Carefully lower the shelf and lock into position.

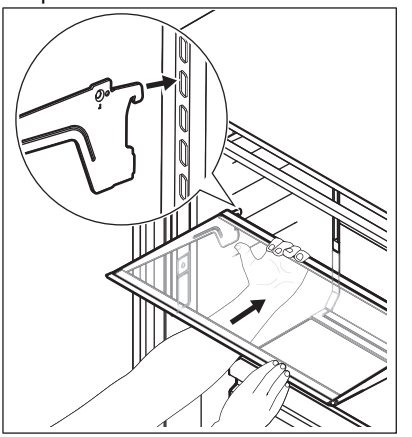

**➔ IMPORTANT**

Carefully handle the shelves when removing and installing them to prevent making contact with the cabinet liners and the stainless steel rear air tower.
Do not block the air-flow vents located on the back wall of the air-tower with the shelves.

## 7.4 CrispSeal® Crisper with Auto Humidity and PureAir Produce Keeper™

Use the crisper to keep produce fresh for longer.

The crisper contains the PureAir Produce Keeper. For more information, refer to Filter Replacement.

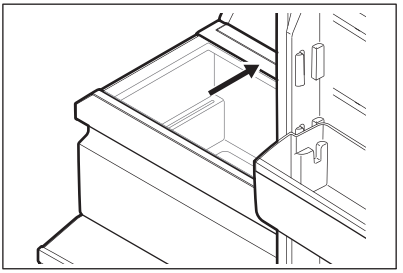

Open and close the drawer by holding the center of the crisper handle.

To remove the crisper:

1. Remove all items from the crisper.
2. Use both hands to remove and install the crisper from slide rail supports. Remove the crisper by pulling it out until it is fully extended. Lift up on the front of the handle trim and lift it out.
3. Carefully handle the crisper to prevent making contact with the cabinet liner during removal and installation.

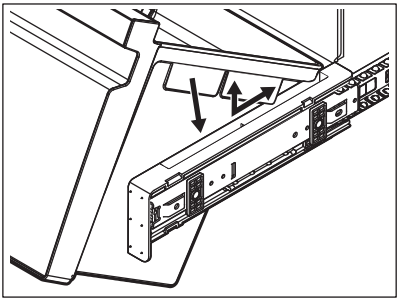

Reverse these steps to reinstall the crisper.

### 7.5 Door Bins

To remove the door bin:

1. Lift up the bin.
2. Pull it straight out.

To install the door bin:

1. Push the bin back and down into the locking tabs.
2. The bin sides will lock into the tabs.

### 7.6 Removing/Installing Lower Freezer Drawer

To remove the lower freezer drawer:

1. Remove all items from the lower drawer
2. Use both hands to remove and install the lower drawer from slide rail supports. Remove the drawer by pulling it out until it is fully extended. Lift up on the front of the handle trim and lift it out.
3. Carefully handle the drawer to prevent making contact with the cabinet liner during removal and installation.

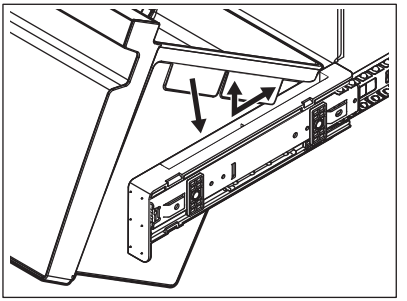

Reverse these steps to reinstall the drawer.

## 8. FILTER REPLACEMENT

### 8.1 PureAir Air Filter

The air filter is located in the top center of the fresh food compartment.

To order replacement filters, please visit our online store at Frigidaire.com or call toll-free at 1-800-374-4432. Here are the product numbers to request when ordering:

- PureAir Ultra II Air Filter PAULTRA2

**NOTE**

We recommend you always use genuine Frigidaire replacement filters only.

### 8.2 Replacing your PureAir

To ensure optimal filtering of refrigerator odors, you should change the air filter every 6 months. The filter status light on

the main controls prompts you to replace the filter after 6 months.

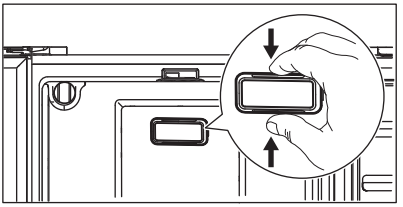

To remove and replace the air filter:

1. Remove the air filter cover by squeezing the top and bottom of the cover together and removing from liner.
2. Remove the old filter and discard it.
3. Unpack the new filter and snap it into the filter cover. Install the open face (carbon media) of the filter facing outward in the cover.
4. Replace air filter cover by squeezing and snapping it back into place.
5. Press and hold the Reset Air Filter button on the appliance control display for 3 seconds. When the indicator turns off, the status has been reset.

### 8.3 PureAir Produce Keeper™

Keep fruits and vegetables fresher longer with PureAir Produce Keeper™. Our produce keeper absorbs ethylene gas, the natural gas that causes produce to ripen quicker. Reduce food waste, save money and enjoy fresh-tasting produce with a longer storage life.

**Ordering Replacement Filters**
To order your replacement filters, please visit our online store at Frigidaire.com, by calling toll-free at 1-800-374-4432, or by visiting the dealer where you purchased your refrigerator. Frigidaire recommends that you replace your filters at least once every 6 months.

Here are the product numbers to request when ordering:

PureAir Produce Keeper™ PK-1 Part #FRPAPKRF

### 8.4 Installing the PureAir Produce Keeper™

**⚠ CAUTION!**

- Do not open:
  Contents may irritate eyes or skin. Keep out of reach of children.
- First aid:
  Contains potassium permanganate. In case of contact with eyes or skin, rinse immediately with water.
- Do not eat:
  If swallowed, seek medical treatment immediately.

1. Remove the plastic wrapper. Insert unopened packet into the holder in the crisper drawer.
2. For optimal results, replace the refill every 6 months along with your air filter.

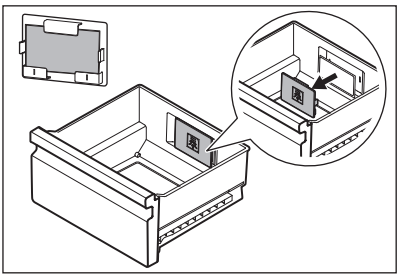

## 9. CARE AND CLEANING

### 9.1 Protecting your investment

Keeping your appliance clean maintains its appearance and prevents odor build-up. Wipe up any spills immediately and clean the freezer and fresh food compartments at least twice a year. When cleaning, take the following precautions:

- Never use chloride or cleaners with bleach to clean stainless steel.
- Do not wash any removable parts in a dishwasher.
- Always unplug the electrical power cord from the wall outlet before cleaning.
- Do not remove the serial plate. Removal of your serial plate voids your warranty.
- Remove adhesive labels by hand. Do not use razor blades or other sharp

instruments which can scratch the appliance surface.

Do not use abrasive cleaners such as window sprays, scouring cleansers, brushes, flammable fluids, cleaning waxes, concentrated detergents, bleaches or cleansers containing petroleum products on plastic parts, interior doors, gaskets or cabinet liners. Do not use paper towels, metallic scouring pads, or other abrasive cleaning materials or strong alkaline solutions.

Refer to the guide below for more details on caring and cleaning specific areas of your appliance.

**NOTE**

If you set your temperature controls to turn off cooling, power to lights and other electrical components will continue until you unplug the power cord from the wall outlet.

**⚠ CAUTION!**

Pull the appliance straight out to move it. Shifting it from side to side may damage flooring.

### 9.2 Care & Cleaning Tips

| Part | What to use | Tips and precautions |
|---|---|---|
| Interior and door liners | • Soap and water<br>• Baking soda and water | Use 2 tablespoons of baking soda in 1 quart of warm water. Be sure to wring excess water out of sponge or cloth before cleaning around controls, light bulb or any electrical part. |
| Door gaskets | Soap and water | Wipe gaskets with a clean soft cloth. |
| Exterior and handles | • Soap and water<br>• Non abrasive glass cleaner | Do not use commercial household cleaners containing ammonia, bleach or alcohol to clean handles. Use a soft cloth to clean smooth handles. Do not use a dry cloth to clean smooth doors. |
| Exterior and handles (Stainless steel models only) | • Soap and water<br>• Stainless steel cleaners | Never use chloride or cleaners with bleach to clean stainless steel.<br>Clean stainless steel front and handles with non-abrasive soapy water and a dishcloth. Rinse with clean water and a soft cloth. Use a non-abrasive stainless steel cleaner. These cleaners can be purchased at most home improvement or major department stores. Always follow manufacturer's instructions. Do not use household cleaners containing ammonia or bleach.<br>Always clean, wipe and dry with the grain to prevent scratching. Wash the rest of the cabinet with warm water and mild liquid detergent. Rinse well, and wipe dry with a clean soft cloth. |

## **10.** TROUBLESHOOTING

Let us help you troubleshoot your concern! This section will help you with common issues. If you need us, visit our website, chat with an agent, or call us. We may be able to help you avoid a service visit. If you do need service, we can get that started for you!
Visit Frigidaire.com or call toll-free 1-800-374-4432.

### 10.1 Common occurrences

| | |
|---|---|
| Refrigerator does not run. | • Ensure the plug is tightly pushed into an electrical outlet.<br>• Check/replace the fuse with a 15amp time-delay fuse. Reset the circuit breaker.<br>• The refrigerator control is turned to OFF.<br>• Refrigerator may be in defrost cycle. Wait 20 minutes and check again. |
| The appliance temperature is unsatisfactory. | Set the appliance control to a warmer or colder setting until the temperature is satisfactory. Allow 24 hours for the temperature to stabilize. |
| The appliance is noisy or vibrates. | • The cabinet is not level.<br>• Floor is weak.<br>• Adjust the anti-tip bracket. Refer to Setting the anti-tip brackets in Installation. |
| Odors in the appliance. | • The interior needs to be cleaned.<br>• Cover or wrap the foods that produce odors. |
| Cabinet light is not working. | • Replace with only a 5Watt or less AC LED light bulb.<br>• Ensure the plug is tightly pushed into an electrical outlet. |

## **11.** LIMITED WARRANTY

Your appliance is covered by a two-year limited warranty. For one year from your date of delivery, Electrolux will pay all costs for repairing or replacing any parts of this appliance that prove to be defective in materials or workmanship when such appliance is installed, used and maintained in accordance with the provided instructions.

**Exclusions**

This warranty does not cover the following:

1. Products with original serial numbers that have been removed, altered or cannot be readily determined.
2. Product that has been transferred from its original owner to another party or removed outside the USA or Canada.
3. Rust on the interior or exterior of the unit.
4. Products purchased “as-is” are not covered by this warranty.
5. Food loss due to any refrigerator or freezer failures.
6. Products used in a commercial setting.
7. Service calls which do not involve malfunction or defects in materials or workmanship, or for appliances not in ordinary household use or used other than in accordance with the provided instructions.
8. Service calls to correct the installation of your appliance or to instruct you how to use your appliance.
9. Expenses for making the appliance accessible for servicing, such as removal of trim, cupboards, shelves, etc., which are not a part of the appliance when it is shipped from the factory.
10. Service calls to repair or replace appliance light bulbs, air filters, water filters, other consumables, or knobs, handles, or other cosmetic parts.
11. Surcharges including, but not limited to, any after hour, weekend, or holiday service calls, tolls, ferry trip charges, or mileage expense for service calls to remote areas, including the state of Alaska.
12. Damages to the finish of appliance or home incurred during transportation or installation, including but not limited to floors, cabinets, walls, etc.
13. Damages caused by: services performed by unauthorized service companies; use of parts other than genuine Electrolux parts or parts

obtained from persons other than authorized service companies; or external causes such as abuse, misuse, inadequate power supply, accidents, fires, or acts of God.

**DISCLAIMER OF IMPLIED WARRANTIES; LIMITATION OF REMEDIES**

CUSTOMER'S SOLE AND EXCLUSIVE REMEDY UNDER THIS LIMITED WARRANTY SHALL BE PRODUCT REPAIR OR REPLACEMENT AS PROVIDED HEREIN. CLAIMS BASED ON IMPLIED WARRANTIES, INCLUDING WARRANTIES OF MERCHANTABILITY OR FITNESS FOR A PARTICULAR PURPOSE, ARE LIMITED TO ONE YEAR OR THE SHORTEST PERIOD ALLOWED BY LAW, BUT NOT LESS THAN ONE YEAR. ELECTROLUX SHALL NOT BE LIABLE FOR CONSEQUENTIAL OR INCIDENTAL DAMAGES SUCH AS PROPERTY DAMAGE AND INCIDENTAL EXPENSES RESULTING FROM ANY BREACH OF THIS WRITTEN LIMITED WARRANTY OR ANY IMPLIED WARRANTY. SOME STATES AND PROVINCES DO NOT ALLOW THE EXCLUSION OR LIMITATION OF INCIDENTAL OR CONSEQUENTIAL DAMAGES, OR LIMITATIONS ON THE DURATION OF IMPLIED WARRANTIES, SO THESE LIMITATIONS OR EXCLUSIONS MAY NOT APPLY TO YOU. THIS WRITTEN WARRANTY GIVES YOU SPECIFIC LEGAL RIGHTS. YOU MAY ALSO HAVE OTHER RIGHTS THAT VARY FROM STATE TO STATE.

**If You Need Service**

Keep your receipt, delivery slip, or some other appropriate payment record to establish the warranty period should service be required. If service is performed, it is in your best interest to obtain and keep all receipts. Service under this warranty must be obtained by contacting Electrolux at the addresses or phone numbers below.

This warranty only applies in the USA and Canada. In the USA, your appliance is warranted by Electrolux Major Appliances North America, a division of Electrolux Consumer Products, Inc. In Canada, your appliance is warranted by Electrolux Canada Corp. Electrolux authorizes no person to change or add to any obligations under this warranty. Obligations for service and parts under this warranty must be performed by Electrolux or an authorized service company. Product features or specifications as described or illustrated are subject to change without notice.

**USA**

**1-800-374-4432**

Frigidaire

10200 David Taylor Drive

Charlotte, NC 28262

**Canada**

**1-800-265-8352**

Electrolux Canada Corp.

5855 Terry Fox Way

Mississauga, Ontario, Canada L5V 3E4

A16366507 (July 2025)