Vinotemp®

A PROUD HERITAGE OF EXPERIENCE & QUALITY

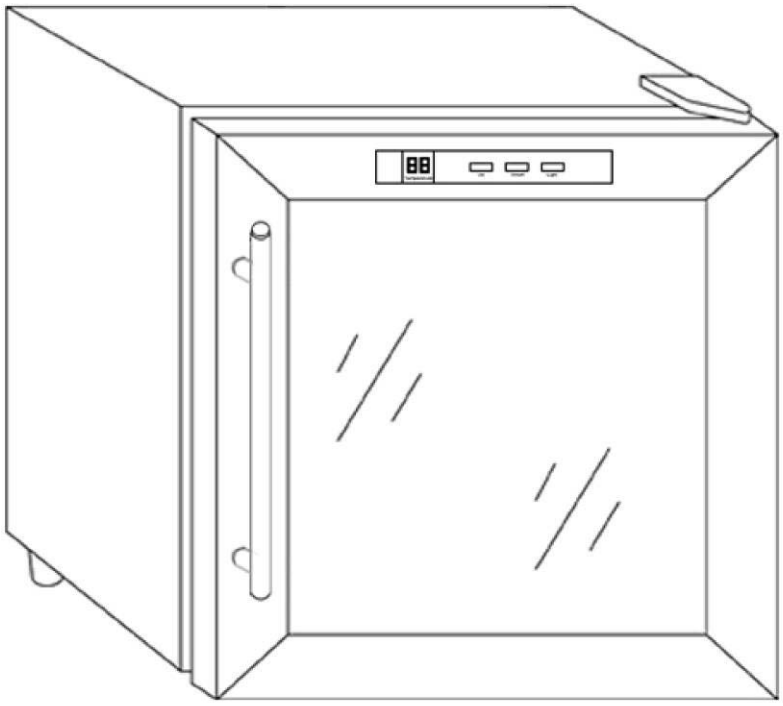

WINE COOLER

VT-12TEDS(12 BOTTLE)

OWNER'S MANUAL

Your Wine Cellar

This unit can be used for storage and/or service. The unit has a glass door and soft interior light that you can leave on to elegantly display your wine.

Serving Wines

Storing wines at the proper temperature is important. To preserve them as long as possible wine should be stored at approximately 55° Fahrenheit. However, the chart below suggests the optimal drinking temperature for the different styles of wine.

°C	°F	Wine Style
19	66	Armagnac, Brandy, Cognac
18	64	Full Bodied Red wines, Shiraz
17	62	Tawny Port
15	59	Medium Bodied Red Wines
14	57	Amontillado Sherry
13	55	Light Bodied Red Wines
12	54	Full Bodied White Wines
11	52	Medium Bodied White Wines
10	50	Rosé, Light Bodied White Wines
9	48	Vintage Sparkling
8	46	Fino Sherry
7	45	Non Vintage Sparkling

General Operating Instructions

Remove all packaging and labels from your wine cellar. Be sure that all parts have been included before discarding any packaging materials. You may want to keep the box and packing materials for use at a later date.

Upon receipt and inspection of unit, the supply cord must be replaced if it is damaged. Contact our customer service at 1-800-777-8466 or info@vinotemp.com.

Please read and follow all safety rules and operating instructions before using.

-Save these instructions-

To register your product, visit:
http://www.vinotemp.com/Warranty.aspx
Register your warranty within 10 days of receiving the unit.
Please be sure to retain your proof of purchase.

TABLE OF CONTENTS

IMPORTANT SAFETY INSTRUCTIONS 5
ELECTRICAL CONNECTION 6
TECHNICAL DATA 6
COOLER DIAGRAM 7
INSTALLATION INSTRUCTIONS 8
CARE AND MAINTENANCE 9
TROUBLESHOOTING GUIDE 10
TERMS OF SALE AND WARRANTY 111
SERVICE & IMPORTANT NOTICE 122

IMPORTANT SAFETY INSTRUCTIONS

When using an electrical appliance, basic precautions should always be followed, including the following:

- Use this appliance only ad described in this manual. Other uses are not recommended and may cause fire, electric shock or injury.
- This wine cooler is not intended for use by young children or infirm persons, without supervision. Young children must be supervised to ensure they do not play with the appliance.
- Ensure the cooler is unplugged before cleaning.
- To clean the cooler, use only mild detergents or glass cleaning products. Do not use harsh detergents or solvents. Never clean parts with flammable fluids. The fumes can create a fire hazard or explosion.
- It is not recommended to use this wine cooler with an extension cord or power board. Please ensure that the appliance is plugged directly into the electrical outlet.
- When positioning the wine cooler, ensure that there is at least a 2 inch clearance at the sides and a 4 inch clearance at the back of the cooler as this is the main outlet for heat. This will allow for adequate ventilation.
- Unit must be freestanding; cannot be used as a built-in cooler.
- This cooler is designed to store wine bottles. It is not intended for food.
- Do not place hot food or drink into the wine cooler before it cools down to room temperature.
- Do not store or use gasoline or any other flammable vapors and liquids in the vicinity of this or any other appliance. The fumes can create a fire hazard or explosion.
- Close the cooler door immediately after putting in any items so the inside temperature will not rise dramatically.
- Keep appliance away from any heat source or direct sunlight.
- For stability, the appliance must be placed on a solid, flat surface. It should not be laid on any soft material.
- Do not place any other appliance on top of the wine cooler.
- The wine cooler is an electrical appliance. To avoid injury or death from electrical shock, do not operate the wire cooler with wet hands, while standing on a wet surface or while standing in water.
- Do not use outdoors or in wet conditions.
- When positioned or if moving the appliance, ensure that it is not set horizontally, positioned at an angle of more than 45°, or turned upside down.
- Never lift or carry the wine cooler by the cord.
- Keep the cord away from heated surfaces.
- This wine cooler is for household use only. Any other use will void the warranty.
- Do not plug into the power socket before set up is completed.
- Always unplug an appliance from outlet when not in use. Never pull cord to remove plug from outlet. Grasp plug and pull to disconnect.

WARNING: To reduce the risk of fire, electric shock or personal injury, unplug or disconnect the appliance from the power supply before servicing.
WARNING: Risk of child entrapment. Before you throw away this or your old cooler, take off the door and leave the shelves in place so that children may not easily climb inside; or take other action to ensure the cooler is harmless.

ELECTRICAL CONNECTION

For your protection, this unit is equipped with a 3-conductor cord set that has a molded 3-prong grounding-type plug, and should be used in combination with a properly connected grounding-type outlet.

It is strongly recommended that you do not use an adapter or an extension cord with this unit. Please ensure that the appliance is plugged directly into the electrical outlet.

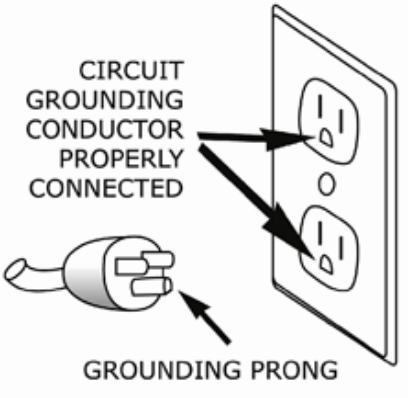

TECHNICAL DATA

Model No.	VT-12TEDS
Capacity	12 Bottles
Voltage	110V AC
Current	0.8A (77°F/25°C)
Protection Class	I
Frequency	60HZ
Climate Class	SN;N
Input Power	50W (77°F/25°C)
Power Consumption (kWh/24h)	0.6 (59°F/15°C)
Temperature Range	50°-66°F (10-18°C)
Net Weight	26.9 Lbs (12.2 Kg)
Gross Weight	31.5 Lbs (14.3 Kg)
Unit Size (W×H×D)	14” x 18.875” x 19.25”
Packing Size (W×H×D)	15.75” x 20.87” x 21.85”

*Note: This wine cooler is designed to store up to 12 standard Bordeaux 750 ml bottles. Storing large and/or oddly shaped bottles (including champagne and sparkling wine bottles) will decrease the capacity of your wine cooler.

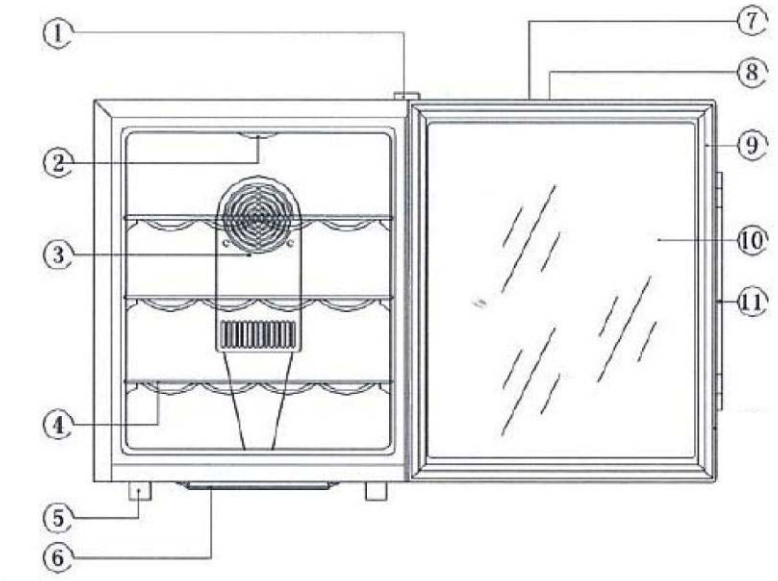

COOLER DIAGRAM

1. Hinge Cover
2. Light
3. Fan Cover
4. Shelf
5. Foot
6. Water Box
7. Temperature Control Knob
8. Light Switch
9. Magnetic Seal
10. Glass
11. Door Handle

CIRCUIT DIAGRAM

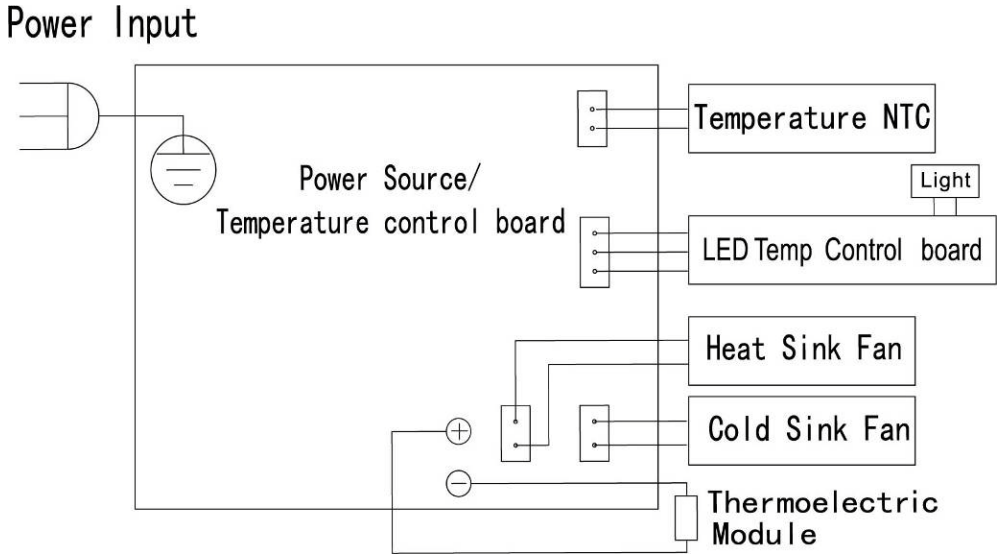

INSTALLATION INSTRUCTIONS

Before using your wine cellar:

- Remove all packing material before using your cooler.
- Check to be sure the following parts are included:
    - For VT-12TEDS, 3 Slide out shelves
    - 1 instruction manual
- Before connecting the appliance to the power source, let it stand upright for approximately 2 hours. This will reduce the possibility of a malfunction in the cooling system from handling during transportation.
- Clean the interior surface with lukewarm water using a soft cloth before first use.
- Position the cooler in a dry and well ventilated place. The recommended ambient temperature should be between 50° and 80°F.
- Place your cooler on a solid, level surface (other than carpet). This will ensure vibration and noise-free operation.
- When positioning the cooler, leave a minimum of 6 inches at the back of the cooler, 10-12 inches on each side of the cooler. This will ensure proper air circulation.
- The unit is designed for freestanding installation only. It is not designed to be installed under a counter, inside a cabinet, or in any location that does not allow the proper clearances on all sides, as stated above.
- Upon plugging the cooler into an electrical outlet, let the unit run for at least 30 minutes before making any adjustments.
- This wine cooler uses thermoelectric refrigeration technology (no compressor) and is not designed for storage in hot areas like garages, warehouses or outdoors since it is designed to operate at a maximum of 30 degrees below the ambient temperature.

OPERATING YOUR WINE COOLER

It is recommended that you install the wine cellar in a place where the ambient temperature is between 50°F and 80°F. If the ambient temperature is above or below recommended temperature, the performance of the unit may be affected. For example, placing in extreme cold or hot conditions may cause interior temperature to fluctuate. Internal range of 50-64°F may not be reached. The temperature may fluctuate depending on whether or not the interior light is on or off or whether the bottles are located on the upper, middle or lower section.

How to use the buttons on the Display Panel:

You can set the temperature as your desire by pressing the control panel buttons. There are two buttons on the panel "▲" and "▼" to adjust the temperature by 1°F between 50-66°F. You can turn the interior light on or off by pressing the light button.

CARE AND MAINTENANCE

Cleaning your wine cellar:

- Unplug the wine cellar and remove the bottles and shelves.
- Wash the inside with warm water or a baking soda solution. The solution should be about 2 tablespoons of baking soda to a quart of water.
- The outside of the wine cellar should be cleaned with mild detergent and warm water.

Moving your wine cellar:

- Remove all the bottles and shelves.
- Securely tape down all loose items inside your wine cellar.
- Turn the leveling legs up to the base to avoid damage.
- Tape the door shut.
- Be sure the wine cellar stays in the upright position during transportation.

INACTIVITY

If the unit will be used for a period of less than three weeks, leave the cooler operating. If the period of inactivity is several months, remove all items and turn the unit off. Clean and dry the interior thoroughly. Leave the door open slightly to prevent and possible moisture build-up.

PROBLEMS WITH YOUR WINE CELLAR

You can solve many common wine cellar problems easily, saving you the cost of a possible service call. Try the suggestions below to see if you can solve the problem before contacting Vinotemp at info@vinotemp.com

TROUBLESHOOTING GUIDE

PROBLEM	POSSIBLE CAUSE
Wine cellar does not operate	• Check if unit is plugged in. • Check if using wrong voltage. • Check for broken fuse.
Wine cellar is not cold enough	• Check the temperature control setting. • Ensure the wine cooler is away from heat sources and direct sunlight. • The wine cellar does not have the correct clearance on all sides of the wine cooler. • Ensure door is properly closed and fans are operating correctly.
Light does not work	• Call the service center.
Wine cellar makes too much noise	• The wine cellar is not level. • Check the fans inside the cooler and at the back of the unit. • Check for proper ventilation and clearance.
Internal light is flashing	• Check that selected temperature is not higher than internal cabinet temperature. • Automatic defrost function has started. This is a normal function.
Wine cooler has started to frost	• Excess humidity or very low temperatures may cause frost to build. Unplug the cooler and allow it to defrost or defrost by hand.
Door will not close properly	• The wine cellar is not level. • The doors were not properly installed. • The seal is weak. • The shelves are out of position.
Temperature LCD display is blank	• Main control board does not work. • The Power Control Board is not functioning. • There is some problem with the plug (no power supply).
Temperature LCD display error	• Temperature sensor is cut off. • Display suffered too much wear and tear.
Buttons are not functional	• Temperature controller panel is damaged.

TERMS OF SALE AND WARRANTY

Vinotemp International (“Seller”) and the person or entity that acquires these goods from Seller (“Purchaser”) hereby fully agree to the following terms and conditions of the sale: Shipping fees are the responsibility of the Purchaser whether freight prepaid or freight collect. Seller assumes no responsibility for the goods sold to the Purchaser once the goods have left the Seller’s premises, including, but not limited to, late delivery by the moving carrier, or for events caused by any difficulty carrier incurs in attempting to fit the goods into the Purchaser’s place of business or residence due to the size of the goods or otherwise. Purchaser assumes all responsibility for delivery, payment of freight, access, measurement, installation, hook-up, wiring, moving and storage of the goods. The transportation of all goods is subject to the terms and conditions which the moving carrier imposes on Purchaser including, but not limited to, additional charges imposed per flight of stairs, and/or additional charges resulting from the carrier’s inability to safely and/or adequately use the building elevator to lift the goods to an upper floor. Any claim for damages incurred during shipment by the carrier of the goods are insured and handled directly with the carrier and must be noted at time of delivery. Any damages due to manufacture defects will be handled directly with Vinotemp International, subject to the limited warranty.

All sales are final, and unless authorized in writing by the Seller, Purchaser may not return the goods, under any circumstance. If Purchaser refuses to accept the goods, under any circumstance, the Purchaser is liable for the return and cost of freight both ways, and if Seller does take back the goods, there will be a restocking/service fee that is 35% of the purchase price of the goods. (Product must be in original packaging). Built-to-Order products (including Cabinets, Racking, and Accessories) are non-returnable. Purchaser must notify Seller of non-conforming goods within four days of delivery, after which time all goods are deemed accepted. If an order has been placed and production has started, cancellation of your order will be a 15% charge. If Purchaser tenders payment with a check that has insufficient funds (NSF), or stops payment on a check or credit card for any reason, Purchaser agrees to pay for all costs associated with the Seller’s collection or litigation of such a claim, including without limitation extra damages, court costs and attorneys’ fees. Finance charges begin the date of invoice. Collection fees plus NSF fee of $50 will be added to your invoice, which you agree to promptly pay. Title to the goods does not pass until payment is received in full by Seller and Seller retains a security interest in the goods until they are paid for in full.

LIMITED WARRANTY: Seller warrants that the goods will be free of defects in materials and workmanship as follows: Furniture style (wood) wine cabinets: all cooling unit parts for a period of 5 (five) years; cabinetry and labor (uninstalled) for a period of 12 (twelve) months from date of sale. For the metal cabinet wine units: parts and labor for cooling system and cabinetry for a period of 12 (twelve) months from date of sale. Thermoelectric Units: 90 (ninety) days from the date of sale (including Wine Coolers, Beer Dispensers, Humidor, Portofino Wood Cellars, and Refrigerators). Wine-Mate Split Systems and installed products are parts only for 1 year, no labor. Other Wine-Mate Cooling Systems are 5 years parts, 1 year labor. Wine Accessories and Racking Systems are not warranted. There is no warranty on parts purchased separately. Removal and re-installation of unit is not included in warranted labor. Purchaser’s exclusive remedy is limited, at Seller’s option; to repair or replace defective part[s] with either new or factory reconditioned part[s]. Purchaser is responsible for shipping the unit pre-paid to designated facility and Seller will pay return shipping charges in the continental United States for items repaired under warranty within 12 (twelve) months from date of sale. Since the natural variation in texture, density, grain, color, tone and shade of wood is unavoidable; Seller does not guarantee the texture, color, tone or shade of the wood: nor does seller guarantee the colorfastness of wood or against peeling, chipping, cracking or scratching. Note: Unfinished wood is subject to warping; all wood surfaces must be sealed before placing cellar into service. Improper placement of the unit will void the warranty. By Vinotemp in writing, any third party repair facility must be pre-approved before providing parts free of charge. This limited warranty does not cover damage due to such things as accident, misuse, abuse, mishandling, neglect, acts of God, fires, earthquakes, floods, high winds, government, war, riot or labor trouble, strikes, lockouts, delay of carrier, unauthorized repair, or any other cause beyond the control of the Seller, whether similar or dissimilar to the foregoing. Seller is not responsible for any damages caused to Purchaser's property resulting from the good. This limited warranty applies only inside the Continental US. (Alaska, Puerto Rico and Hawaii are not warranted.)

For Non-New Units (Scratch & Dent/Refurbished/Floor Models), warranty for compressor units is 90 days from your dated invoice and 30 days for thermoelectric units (parts for function only, not cosmetic defects). These units are refurbished and sold as is; Purchaser assumes risks to the quality and performance of goods and assumes the costs of all necessary service or repair not covered herein.

For Element Grills (via Element Products LLC), grills have a 1 year comprehensive parts warranty on entire product. Three years limited parts warranty covering the stainless burner and a thirty day limited parts warranty on grill accessories. If grill is defective and unused plus all packaging and parts are intact, we will either replace the grill or provide service to repair the grill. Returned product must accompany all original packaging and parts and is subject to our 35% restocking fee (and freight both ways). With Wine-Mate products, if the customer calls and the product is “defective”, you must obtain a letter from your qualified refrigeration technician at the customers cost, to verify that the unit was installed properly, with proper ventilation and the unit is truly malfunctioning due to manufacture defect.

Purchaser understands and acknowledges that the goods sold here are wine cellars, cigar humidors, and/or other similar units which house wine or cigars. Purchaser assumes all risk of using these units, including risk of spoilage, humidity variations, temperature variations, leaks, fire, water damage, mold, mildew, dryness and similar and any other perils that might occur. Seller is not responsible for incidental or consequential damages, and there are no warranties, expressed or implied, which extend beyond the Limited Warranty described above. The implied warranties of merchantability and of fitness for a particular purpose are hereby expressly disclaimed. Some states do not allow the exclusion of incidental or consequential damages, or a waiver of the implied warranties of fitness and/or merchantability, so the above limitations may not apply to you. This warranty gives you specific legal rights and you may also have other rights which vary from state to state. Seller disclaims any indemnification for claims of infringement of any intellectual property of protectable nature. In the event of any dispute between Seller and Purchaser arising out of or relating to these terms and conditions or to the goods sold generally, Purchaser must first file a written claim with Seller within ten days of the occurrence giving rise to the claim and wait an additional thirty days for a response before initiating any legal action.

The sale and all terms are subject to California law. Any legal proceeding arising out of or relating to these terms and conditions or to the goods sold generally shall be brought solely and exclusively in the County of Los Angeles. In no event may Purchaser initiate any legal proceeding more than six months after the occurrence of the event giving rise to the dispute.

The above terms and conditions are the only ones governing this transaction and Seller makes no oral representations of any kind. These Terms and Conditions can only be modified in writing, signed by both Purchaser and Seller. 1/12

and reserves the right to change materials and specifications without notice.

WARNING: Please do not place the unit within reach of children.
For adult use only.

Contact **info@vinotemp.com** with any questions or visit
www.vinotemp.com

3097648
Conforms to UL Std. 250
Certified to CSA Std. C22.2 No.63

Vinotemp®

17621 S. Susana Road
Rancho Dominguez, CA 90221
www.vinotemp.com

Vinotemp is a registered trademark of Vinotemp International. All products, features, and services are subject to change without notice. We cannot guarantee the accuracy of the contents of this document. We disclaim liability for errors, omissions, or future changes.

©2012 Vinotemp International. All rights reserved.