This Owner's Manual is provided and hosted by Appliance Factory Parts.

Appliance Factory Parts
Experts in BBQ, Humidifier, & Appliance Parts
1-800-955-7075

Russell Hobbs RHUCLF2W Owner's Manual

Shop genuine replacement parts for Russell Hobbs RHUCLF2W

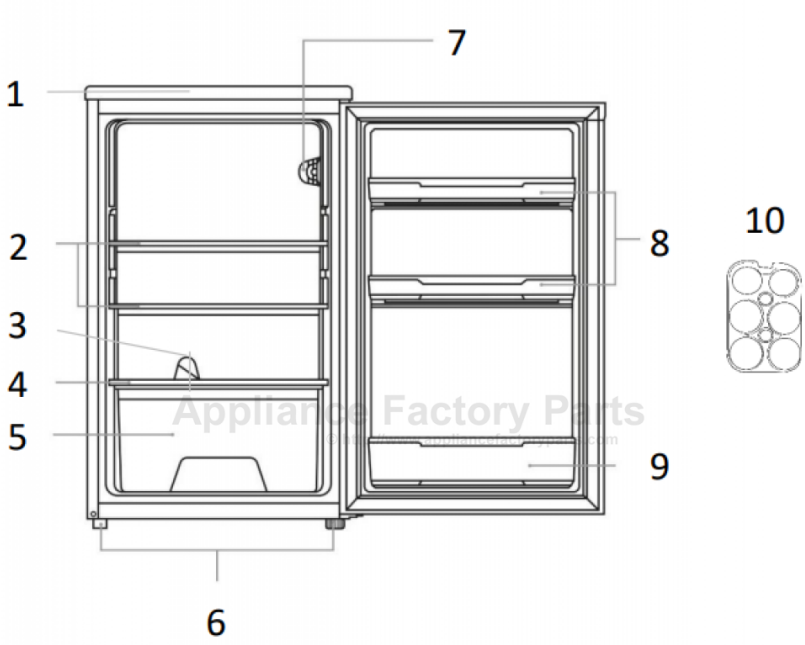

1.	Top cover	6.	Feet
2.	Adjustable shelves	7.	Light & thermostat
3.	Drainage hole	8.	Bottle racks
4.	Non-adjustable shelf	9.	Door rack
5.	Crisper	10.	Egg tray

Find Your Russell Hobbs Refrigerator Parts - Select From 31 Models

-------- Manual continues below --------

Russell Hobbs

Under Counter Larder Fridge
Instruction Manual

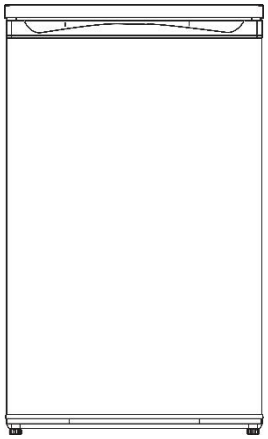

Model number(s):
RHUCLF2 (W) (B) (SS)

For Customer Services & Spare Parts please call **0345 208 8750**
or visit us at **https://mda.russellhobbs.com**

IMPORTANT:
RETAIN FOR FUTURE REFERENCE

Contents

Safety Instructions	.....	3-5
Electrical Safety	.....	5
Transportation & Handling	.....	5
Installing & Switch on your Appliance	.....	6
Before Switching On	.....	7
Product Overview	.....	8
Unit & Spare Parts	.....	8
Usage	.....	9
Temperature Selection	.....	9
Door Reversal	.....	10-12
Replacing the Bulb	.....	13
Energy Saving Advice	.....	14
Food Storage Advice	.....	15
Maintenance & Cleaning	.....	16
Internal Cleaning	.....	16
External Cleaning	.....	16
When not in Use	.....	16
Trouble Shooting	.....	17-18
Connection to the Mains Supply	.....	19
Guarantee	.....	20
Technical Specification	.....	21
Notes	.....	22-23

Russell Hobbs

Safety Instructions

Important note: Please read this booklet before installing and switching on this appliance. The manufacturer assumes no responsibility for incorrect installation and usage as described in this booklet.

⚠ **Warning:** When positioning the appliance, ensure the supply cord is not trapped or damaged.

⚠ **Warning:** Do not locate multiple portable socket-outlets or portable power suppliers at the rear of the appliance.

- This model uses natural refrigerant gas as part of its cooling system. This gas is known as R600a (Isobutene) and is environmentally friendly but can be combustible. Care should therefore be taken when handling or transporting the product to ensure that none of the refrigeration circuit components are damaged,
- Do not obstruct ventilation openings in the appliance
- The appliance must not be placed or rested on its power cord.
- Do not use mechanical devices or other artificial means to accelerate the defrosting process, such as a heater or a hair dryer.
- Do not use electrical appliances in the refrigerator compartment of the appliance.
- If this appliance is to replace an old refrigerator with a lock, the lock must be removed as a safety measure before storing it or disposing of it. This is to protect children from locking themselves inside the appliance.
- Old refrigerators and freezers contain insulation gases and refrigerant, they must be disposed of properly. Contact your local authority or your dealer if you have any questions. Please ensure that you do not damage the scrap unit prior to being picked-up by the relevant waste disposal service.
- Do not use adaptors or extension leads when connecting the appliance to the electrical power supply
- Do not plug in damaged plugs.

- Do not pull, twist or damage the power cable.
- Do not plug-in or un-plug the appliance with wet hands to prevent electrical shock.
- This appliance can be used by children aged from 8 years and above and persons with reduced physical, sensory or mental capabilities or lack of experience and knowledge if they have been given supervision or instruction concerning use of the appliance in a safe way and understand the hazards involved. Children should not play with the appliance.
- Children aged from 3 to 8 years are allowed to load and unload this appliance.
- This appliance is designed to be used by adults, do not allow children to play with the appliance or let them hang over the door.
- Do not place explosive or flammable material in your appliance for your own safety.
- Bottles containing a high percentage of alcohol must be sealed well and placed vertically in the refrigerator.
- Do not cover the body or the top of the appliance
- Fix down the accessories in the appliance during transportation to prevent damage to them.
- To avoid contamination of food, please respect the following instructions
    - Opening the door for long periods can cause a significant increase of the temperature in the compartments of the appliance.
    - Clean regularly surfaces that can come in contact with food and accessible drainage systems.
    - Clean water tanks if they have not been used for 48h; flush the water system connected to a water supply if water has not been drawn for 5 days.
    - Store raw meat and fish in suitable containers in the refrigerator, so that it is not in contact with or drip onto other food.
    - Two-star frozen-food compartments(if they are presented in the appliance) are suitable for storing pre-frozen food, storing or making ice-cream and making ice cubes.

- One-, two- and three -star compartments (if they are presented in the appliance) are not suitable for the freezing of fresh food.
- If the appliance is left empty for long periods, switch off, defrost, clean, dry and leave the door open to prevent mount developing within the appliance.

Electrical Safety

THIS APPLIANCE MUST BE PLUGGED INTO AN EARTHED SOCKET

- Before switching on, make sure that the voltage of your electricity supply is the same as that indicated on the rating plate. This product is designed to operate on 220 – 240V AC; 50Hz. Connection to any other power source may damage the unit.
- This product may be fitted with a non re-wireable plug. If it is necessary to change the fuse in the plug, the fuse cover must be refitted. If the fuse cover becomes lost or damaged, the plug must not be used until a suitable replacement is obtained.
- If the plug has to be changed because it is not suitable for your socket, or becomes damaged in any way, it should be cut off and an appropriate plug fitted following the wiring instructions. This should be carried out by a qualified electrician. The plug removed must be disposed of safely, as insertion into a 13 Amp socket is likely to cause an electrical hazard.

Transportation and Handling

For safe lifting, tilt the appliance backwards by no more than 45 degrees, hold the base and rear corners of cabinet. Lift the refrigerator carefully. Never use the door handles for lifting. To move the refrigerator on a flat level surface, tilt it slightly backwards and push backwards.

This unit is heavy and could cause injury – ensure there are adequate people present to move the appliance.

Installing and Switching on Your Appliance

- Operating voltage for your appliance is 220-240V at 50Hz.
- Before plugging in the power supply, ensure that the voltage on the rating label corresponds to the working voltage of your electrical system in your home.
- Insert the plug into an efficient Ground (Earth) connection. If the socket has no Ground (Earth) contact or the plug does not match, we suggest you call an authorised electrician for assistance.
- Place your appliance in an area that is not exposed to direct sunlight.
- Your appliance should be placed at least 10cm away from stoves, ovens and other heating cores.
- This appliance should never be used outdoors or left in the rain.
- When your appliance is placed next to a chest freezer or freezer, there should be at least 10cms between them to prevent humidity on the outer surface.
- Do not place anything on your appliance and install the unit in a suitable place so that there is at least 30cm clearance above the appliance.
- If placing your appliance next to kitchen cabinets, leave 5cm between them.
- The rear of the appliance should be at least 6cm away from the back wall.
- The appliance must be used in the vertical position and on a flat surface.
- To level the appliance, use the adjustable feet on the appliance.
- Do not place your appliance on a carpeted surface as this will prevent adequate ventilation.
- This appliance should only be placed on a flat, firm surface.
- Choose a dry and well-ventilated space.
- The appliance should be positioned so that the plug is easily accessible.
- If you need help or are unsure how to install the unit, please contact Customer Services on 0345 208 8750 or visit **https://mda.russellhobbs.com**.



⚠ **WARNING!** During using, service and disposal the appliance, pay attention to symbol similar to one shown, which is located on appliance (rear panel or compressor) and with a yellow or orange colour. It's risk of fire warning symbol. There are flammable materials in refrigerant pipes and compressor. Please be far away fire source during using, service and disposal.

Before Switching On

- Before using your appliance, add a teaspoon of bicarbonate of soda to warm water and with a damp cloth wipe down all parts of the new appliance, then repeat the process with a clean damp cloth and dry. **(ensure the appliance is not connected to the power when performing this task).**
- Remove all transport tapes and foam protection pieces . Clean the interior with a cloth dampened in lukewarm soap and water. Wipe with clean water and wipe dry.
- There may be an odour when you first switch on the appliance, it will disappear when the appliance starts to cool.
- When the appliance has been positioned, adjust the feet to ensure the unit is stable. This is essential to ensure quiet running and proper door opening /closing.
- Connect to the electrical socket but do not switch the power to the refrigerator on for at least 3 hours. The coolant within the product needs time to settle after it has been transported and put in to position, failure to do this will affect the cooling performance of your appliance.
- Once the appliance has settled locate the thermostat knob on the product and set to “5" position and switch on the power. The compressor will begin to work. Close the door
- You may hear faint gurgling or bubbling sounds when the refrigerant is pumped to the cooling system and through the coils or tubing at the rear of the appliance. When the compressor is in operation you may hear a slight whirring sound or pulsating noise. The thermostat controls the operation of the compressor, and you may hear a slight click as it cycles in and out (this is normal).
- To save energy, you should minimize the frequency and duration of door opening.

Product Overview

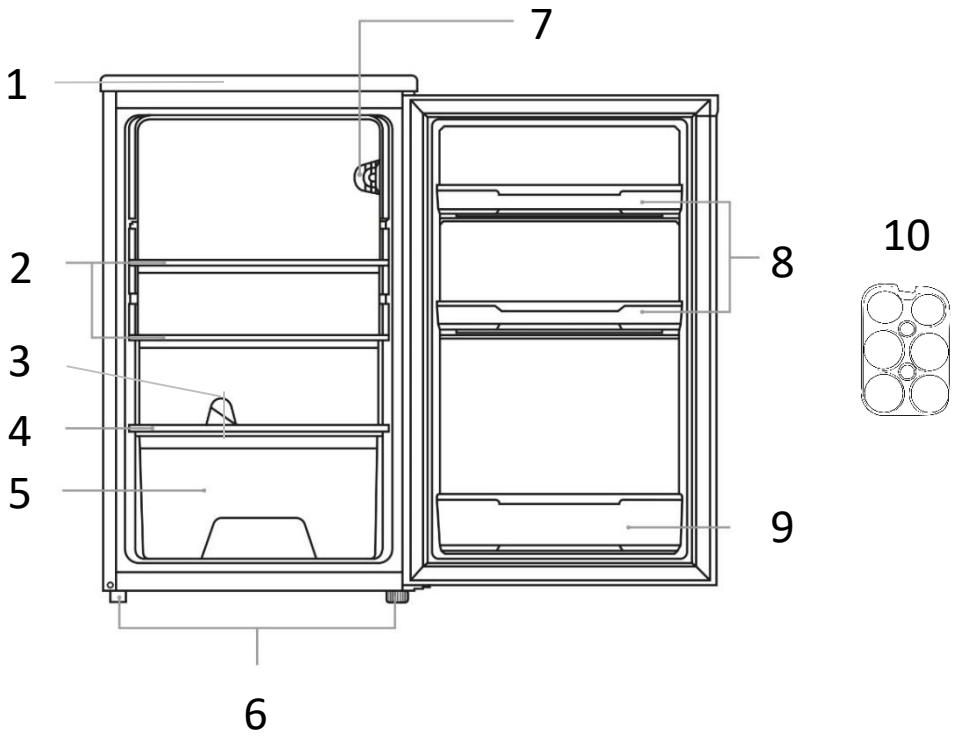

1.	Top cover	6.	Feet
2.	Adjustable shelves	7.	Light & thermostat
3.	Drainage hole	8.	Bottle racks
4.	Non-adjustable shelf	9.	Door rack
5.	Crisper	10.	Egg tray

Unit Parts & Spare Parts

Before installation, check that all parts detailed in the product overview are present. If any parts are missing, please contact the Customer Service team on **0345 208 8750** or visit us at

Usage

Allow to stand for a minimum of 3 hours before plugging in to the mains

The temperature in the appliance is controlled by the temperature control knob located inside the fridge. Rotate the control knob up or down to regulate the temperature inside the fridge.

On the temperature control, 1 is the warmest setting and 6 is the coldest setting. **Under normal conditions the temperature control should be set at 5.** Setting 6 should be used as a rapid cool setting and should only be set 2 hours before a large amount of food is placed in the fridge. The temperature control should be put back to setting 5 after the food has been placed in the fridge, if this is not done the temperature in the fridge compartment could fall below 0°C as the compressor will run continuously.

Once the temperature control has been set, close the door and plug in the appliance. We recommend that the door is not opened for a minimum of 4 hours to allow the appliance to reach the standard operating temperature.

Note: The standard operating temperature for the fridge compartment should be between 0°C and 4°C.

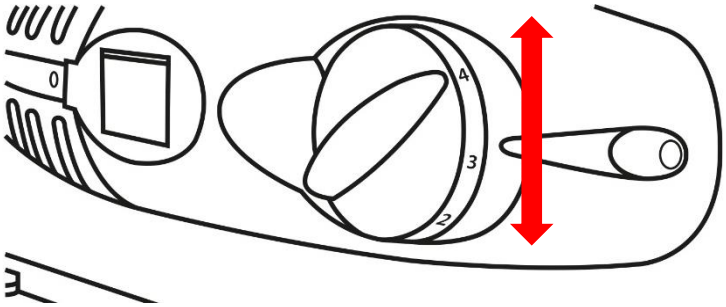

- **Note: The temperature of the freshly stored food and how often the door is opened affects the temperature in the refrigerator compartment. If required, change the temperature setting.**

Door Reversal

You will need to tilt the appliance backward to access the lower hinge which holds screws. Do not tilt more than 45 degrees and do not lay the appliance flat on its side.

For your own safety, a minimum of 2 people should lift or tilt this product.

Reversing the door:

1. Remove the screws holding the top cover in place at the rear of the unit. Gently lift up the rear of the top cover and push it forward to remove it.

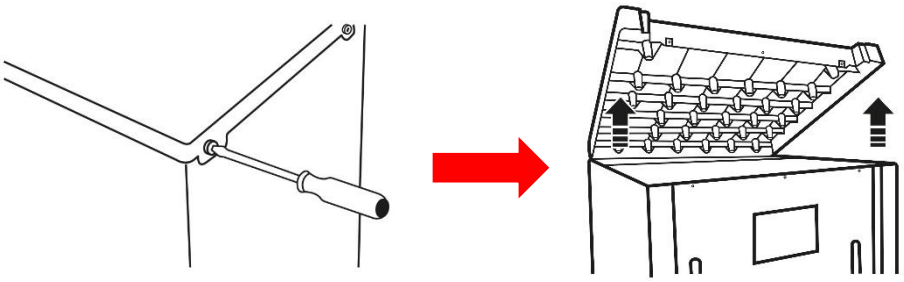

2. Remove the 3 screws from the top hinge, either with a cross headed screwdriver or a spanner.

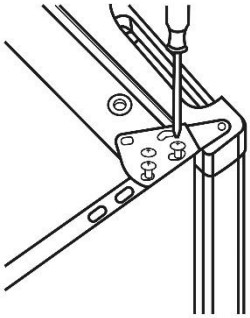

3. Support the door and gently remove the hinge and the door.

Door Reversal

4. On the bottom of the door swap the bottom door stopper over to the opposite side.

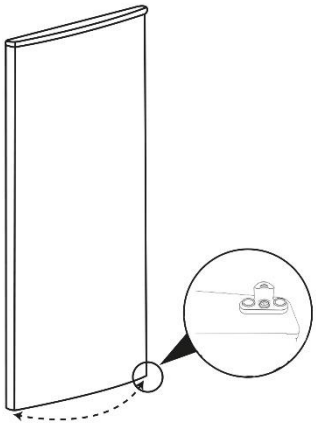

5. Tilt the appliance no more than 45 degrees and remove the right bottom hinge by removing the 3 screws with a cross headed screwdriver. Then remove the adjustable foot on the left side by unscrewing it by hand and the 1 screw with a cross headed screwdriver. Fix the bottom hinge to the left side with the screws and put the adjustable foot and 1 screw on the right hand side.

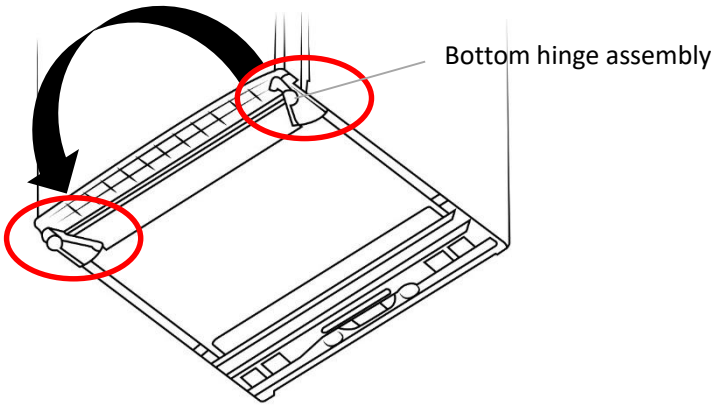

Door Reversal

6. Position the door on the bottom hinge and then set the door in the correct position at the top. Put the pin of the hinge in to the door and then install the top hinge on the left hand side and fix it in place with 3 screws (you may need to remove 1 screw on the left hand side prior to installing the hinge). **Ensure the door is aligned horizontally and vertically so that the seals are closed on all sides before finally tightening the top hinge.**

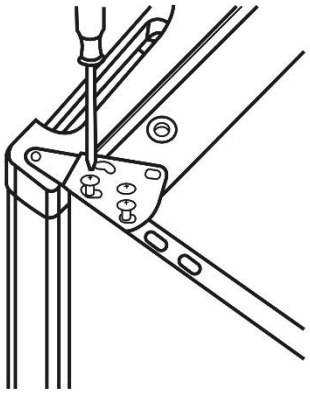

7. Replace the top cover and fix it in place with 2 screws at the rear of the appliance

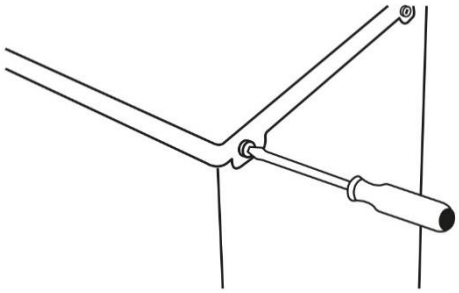

8. Check that the door opens and shuts correctly after you have completed the door reversal process.

The appliance must now be upright for a minimum of 3 hours before turning it on.

Replacing the Bulb

The light is an energy efficient, long life LED. Therefore should not need replacing throughout the life of the product however if it does it has to be replaced by a qualified engineer.

Please call the service team on **0345 208 8750.**

Engineer instructions:

1. Unplug the appliance from the mains.
2. Locate the lamp cover which is on the rear of the temperature control panel in the top right hand side of the refrigeration compartment.
3. While holding the lamp cover place coin between lamp cover lip and internal wall of the refrigerator and twist the coin.

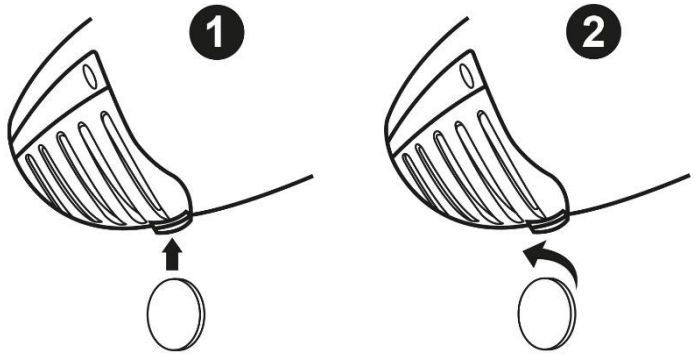

4. Remove the lamp cover and replace the bulb with a new one, maximum 2W.
5. Put the lamp cover back on.
6. Check the temperature control dial has not been accidentally altered.
7. After 5 minutes, plug the appliance in to the mains.

If you have any problems with this procedure please call the service team on **0345 208 8750.**

.

Energy Saving Advice

- Do not install the appliance close to sources of heat, such as a cooker, dishwasher or radiator.
- Locate the appliance in a cool well-ventilated room and make sure that the air vents are clear.
- Try to avoid keeping the doors open for a long time, warm air will enter the cabinet and may cause a build-up of ice as well as affecting the energy consumption. Ensure there are no obstructions preventing the doors from closing properly.
- Ensure that the door seals are clean and there are no tears or splits.
- Keep the most perishable foods, (those with a short shelf-life, such as cooked meats), in the coldest part of the fridge. The Salad Crisper Box is the warmest part of your fridge and should be used for vegetables, salads and fruits etc.
- Do not overload the appliance: the cooling air that circulates to keep the appliance cold gets blocked and pockets of warm air form.
- Do not put hot food into the fridge – let it cool down first.

Food Storage Guidelines

Refrigerator compartments	Type of food
Door or balconies of fridge compartment	Foods with natural preservatives, such as jams, juices, drinks, condiments. Do not store perishable foods.
Crisper drawer (salad drawer)	Fruits, herbs and vegetables should be placed separately in the crisper bin. Do not store bananas, onions, potatoes, garlic in the refrigerator.
Fridge shelf – bottom Chiller (box/drawer)	Raw meat, poultry, fish (for short-term storage)
Fridge shelf – middle	Dairy products, eggs
Fridge shelf – top	Foods that do not need cooking, such as ready-to-eat foods, deli meats, leftovers.
Freezer drawer(s)/shelf	Foods for long-term storage. Bottom drawer/shelf for raw meat, poultry, fish. Middle drawer/shelf for frozen vegetables, chips. Top drawer/shelf for ice cream, frozen fruit, frozen baked goods.

Maintenance & Cleaning

Disconnect the appliance from the power supply before cleaning.

Internal Cleaning

- Do not pour water over the appliance.
- The cavity should be cleaned periodically using a solution of bicarbonate of soda and lukewarm water (5ml to 0.5 litre of water)
- Clean the accessories separately with soap and water. Do not put them in the dishwasher.
- Do not use abrasive products, detergents or soaps.
- After washing, rinse with clean water and dry carefully.
- When you have finished cleaning reconnect the plug with **dry hands**.

External Cleaning

- Wash the outer cabinet with warm soapy water. Do NOT use abrasive products.
- There are sharp edges on the underside of the product so care should be taken when cleaning.
- Once or twice a year dust the rear of the appliance and the compressor at the back of the appliance, with a brush or vacuum cleaner, as an accumulation of dust will affect the performance of the appliance and cause increased energy consumption.

When the appliance is not in use

When the appliance is not in use for long periods, disconnect from the electricity supply, empty all of the food and clean the inside. Leave the door open to prevent the build-up of odours.

Trouble shooting

Problem	Solution
The fridge doesn't work	Check that the appliance is switched on.
	Check that there has not been a power cut.
	Check that the plug is not faulty.
	Check that the fuse has not blown.
	Check that the voltage is correct for the appliance.
	Are there any faults with the socket? For this purpose, try the plug of your appliance by connecting it to a socket which you are sure is working.
The temperature inside the appliance is not cold enough	Check that there is not too much food in the appliance.
	Check that the thermostat is set to a suitable temperature.
	Check that the appliance is not placed in direct sunlight, or too near to a heating source.
	Check that the ambient temperature is within the operation limits of the appliance.
	Are the doors of the appliance opened frequently? Once the door is opened, the humidity found in the air in the room enters the appliance, especially if the humidity levels in the room are very high. The more frequently the door is opened in humid conditions the more chance of the build up of moisture.
The temperature within the appliance is too cold.	Increase the working temperature by adjusting the thermostat to a lower setting. The highest setting should only be used as a rapid cool setting and should only be set 2 hours before a large amount of food is placed in the fridge. If this is not done the temperature in the fridge compartment could fall below 0°C as the compressor will run continuously.
The inner surfaces of the appliance are wet	Caused by condensation - dry the inside of the appliance.
The outer surfaces of the appliance are wet	Caused by condensation - dry the outer of the appliance carefully.

Trouble shooting

Problem	Solution
Smell/odour	Check all the food and drink that is in the fridge is in date and correctly packaged. If it isn't then it should be removed immediately or repackaged. Check for spillages on each shelf, rack and drawer. You may need to remove the drawers to check that no spillages have settle underneath them. As spillages that have not been cleaned and have been left can cause smells and unwanted odours.
	Check the drainage pipe is not clogged or the drip tray at the back of the appliance is full. The pipe can be cleared by pouring hot water through, but you must ensure the appliance is turned off, the plug is removed from the socket and a jug or bucket is in place to catch the flow of water.
The doors do not close properly	Ensure there are no obstructions preventing door closure.
	Check the door compartments and shelves are correctly in place.
	Check the door seal is not warped or torn.
	Check the appliance is level.
Unusual noises	Check that the appliance is on a flat, level surface and is stable.
	Check the spacing's around the appliance and ensure it is not touching other items.
	Bubbling and gurgling sound: • This noise is emitted as the coolant fluid flows through the pipes within the system. This is normal.
	Water flowing sound: • This is the normal sound of water flowing into the drain trough during the defrosting process.
	If the appliance is operating noisily (compressor noise): This is normal. This noise indicates that the compressor is operating normally. As the compressor is being energized, it might run a bit more noisily for a short period of time.

Connection to the Mains Supply

WARNING- THIS APPLIANCE MUST BE EARTHED

This appliance is designed to operate from a mains supply of AC220V - 240V; 50HZ. Check that the voltage marked on the product corresponds with your supply voltage.

For UK use only – Plug fitting details (where applicable):
As the colours of the wires in the mains lead of this appliance may not correspond with the coloured markings identifying the terminals in your plug, proceed as follows:

The GREEN/YELLOW wire is the EARTH and must be connected to the terminal which is marked with the letter E or by the earth symbol or coloured GREEN or GREEN/YELLOW.



The BLUE wire is the NEUTRAL and must be connected to the terminal marked with the letter N or coloured BLACK.

The BROWN wire is the LIVE wire and must be connected to the terminal marked with the letter L or coloured RED.

Always ensure that the plug cord grip is fastened correctly.

If a 13A (BS1363) fused plug is used it must be fitted with a 13amp fuse conforming to BS1362 and be BSI or ASTA approved.

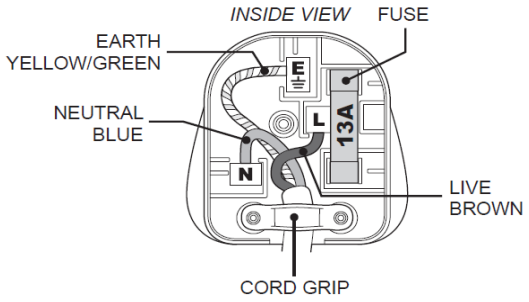

Guarantee

This product is guaranteed for 12 months from the date of the original purchase. If any defect arises due to faulty materials or workmanship you must contact Product Care with the original proof of purchase so a replacement or refund can be arranged.

Refund or replacement is at the discretion of Product Care.

The following conditions apply:

- Product Care will require a valid proof of purchase at the point of replacement or refund.
- The product must be installed and used in accordance with the instructions contained in this instruction guide and any other instructions for use which has been supplied.
- It must be used for domestic purposes only and for its intended use.
- This guarantee does not cover wear and tear, damage, misuse or consumable parts.

This does not affect your statutory rights.

Imported by
G2S LIMITED
WIGAN
WN2 4AY

Technical Specification

Model number	RHUCLF2 (W) (B) (SS)
Rated Voltage	220V – 240V ~ 50Hz
Capacity	110L
External Dimensions(HxWxD)	845mm x 501mm x 540mm

Notes

Notes

For Customer Services & Spare Parts please call **0345 208 8750** or visit us at **https://mda.russellhobbs.com**



This symbol is known as the 'Crossed-out wheelie bin Symbol'. When this symbol is marked on a product/batteries, it means that the product/batteries should not be disposed of with your general household waste. Only discard electrical/electronic/battery items in separate collection schemes, which cater for the recovery and recycling of materials contained within. Your co-operation is vital to make sure the success of these schemes and for the protection of the environment. For your nearest disposal facility, visit www.recycle-more.co.uk or ask in store for details.

We reserve the right due to possible changes to design to alter the instruction manual without prior notice.

Russell Hobbs

Revision 3