HOSHIZAKI

Instruction Manual

Professional Series
Refrigerated Kitchen Euipment

Models
Reach-In
Roll-In
Pass-Thru
Roll-Thru

hoshizakiamerica.com

Issued: 4-7-2016

⚠ WARNING

Only qualified service technicians should install and service the appliance. To obtain the name and phone number of your local Hoshizaki Certified Service Representative, visit www.hoshizaki.com. No installation or service should be undertaken until the technician has thoroughly read this Instruction Manual. Likewise, the owner/manager should not proceed to operate the appliance until the installer has instructed them on its proper operation. Failure to install, operate, and maintain the appliance in accordance with this manual may adversely affect safety, performance, component life, and warranty coverage. Proper installation is the responsibility of the installer. Product failure or property damage due to improper installation is not covered under warranty.

Hoshizaki provides this manual primarily to assist qualified service technicians in the installation, maintenance, and service of the appliance.

Should the reader have any questions or concerns which have not been satisfactorily addressed, please call, send an e-mail message, or write to the Hoshizaki Technical Support Department for assistance.

Phone: 1-800-233-1940; (770) 487-2331
Fax: 1-800-843-1056; (770) 487-3360

E-mail: techsupport@hoshizaki.com

HOSHIZAKI AMERICA, INC.
618 Highway 74 South
Peachtree City, GA 30269
Attn: Hoshizaki Technical Support Department

Web Site: www.hoshizaki.com

NOTE: To expedite assistance, all correspondence/communication MUST include the following information:

- Model Number _____
- Serial Number _____
- Complete and detailed explanation of the problem.

IMPORTANT
This manual should be read carefully before the appliance is installed and operated. Read the warnings and guidelines contained in this booklet carefully as they provide essential information for the continued safe use and maintenance of the appliance. Retain this booklet for any further reference that may be necessary.

CONTENTS

Important Safety Information 5
I. Installation Instructions 8
A. Location 8
B. Checks Before Installation 8
C. Setup 9
1. Remove the Appliance from the Pallet 9
2. Optional Overflow Pan Installation (if applicable) 9
a) Reach-In Optional Overflow Pan (HS-3521) 9
b) Pass-Thru Optional Overflow Pan (HS-3560) 9
3. RFH1-SSB(-HS)(-HSE) Reservoir Assembly Installation 10
D. Electrical Connection 14
E. Front Panel 15
F. Door Reversal 16
G. Final Checklist 16
II. Operating Instructions 17
A. Important Notes About Usage 17
B. Startup 19
C. Cabinet Temperature 20
1. Temperature Display 20
2. Adjusting the Temperature Setpoint 20
3. Changing the Temperature Display Scale (°F or °C) 20
D. Defrost 21
1. Refrigerator 21
2. Freezer 21
E. Food Storage 22
F. Perimeter Frame Heater 22
G. Safety Devices 23
1. Compressor External and Internal Overloads 23
2. Short-Cycle Protection 23
3. High-Pressure Switch 23
H. Alarm Safeties 23
I. Cooling Performance 25
J. Cabinet Condensation 25

III. Cleaning and Maintenance Instructions 26
A. Cleaning 26
1. Exterior 26
2. Cabinet Interior 26
3. Door Gaskets 26
4. Shelves 26
5. Glass Door 26
B. Maintenance 27
1. Air Filter 27
2. Condenser 27
3. Power Supply Connection 27
IV. Preparing the Appliance for Periods of Non-Use 28
V. Disposal 29

Important Safety Information

Throughout this manual, notices appear to bring your attention to situations which could result in death, serious injury, damage to the appliance, or damage to property.

⚠ WARNING **Indicates a hazardous situation which could result in death or serious injury.**

NOTICE **Indicates a situation which could result in damage to the appliance or property.**

IMPORTANT **Indicates important information about the use and care of the appliance.**

⚠ WARNING

This appliance should be destined only to the use for which it has been expressly conceived. Any other use should be considered improper and therefore dangerous. The manufacturer cannot be held responsible for injury or damage resulting from improper, incorrect, and unreasonable use. Failure to install, operate, and maintain the appliance in accordance with this manual will adversely affect safety, performance, component life, and warranty coverage.

To reduce the risk of death, electric shock, serious injury, or fire, follow basic precautions including the following:

- Only qualified service technicians should install and service this appliance.
- This appliance must be installed in accordance with applicable national, state, and local codes and regulations.
- To reduce the risk of electric shock, do not touch the power switch or plug with damp hands.
- Make sure the power switch is in the "OFF" position before plugging in or unplugging the appliance to reduce the risk of electric shock.
- Before servicing, move the power switch to the "OFF" position. Unplug the appliance from the electrical outlet.
- This appliance requires an independent power supply of proper capacity. See the nameplate for electrical specifications. Failure to use an independent power supply of proper capacity can result in a tripped breaker, blown fuse, damage to existing wiring, or component failure. This could lead to heat generation or fire.
- **THIS APPLIANCE MUST BE GROUNDED:** Failure to properly ground the appliance may result in death, electric shock, or fire.
  Corded Models: Corded models are equipped with either a NEMA 5-15 three-prong grounding plug or a NEMA 5-20 three-prong grounding plug to reduce the risk of potential shock hazards. Corded models must be plugged into a properly grounded, independent 3-prong wall outlet. If the outlet is a 2-prong outlet, it is your personal responsibility to have a qualified electrician replace it with a properly grounded, independent 3-prong wall outlet. Do not remove the ground prong from the plug and do not use an adapter plug. Failure to follow these instructions may result in death, electric shock, or fire.

⚠ WARNING, continued

- Do not use an extension cord.
- Do not use an appliance with a damaged power cord. The power cord should not be altered, jerked, bundled, weighed down, pinched, or tangled. Such actions could result in electric shock or fire. To unplug the appliance, be sure to pull the plug, not the cord, and do not jerk the cord.
- On corded models, the GREEN ground wire in the factory-installed power cord is connected to the appliance. If it becomes necessary to remove or replace the power cord, be sure to connect the power cord's ground wire.
- Do not splash, pour, or spray water directly onto or into the appliance. This might cause short circuit, electric shock, corrosion, or failure.
- Do not make any alterations to the appliance. Alterations could result in electric shock, injury, fire, or damage to the appliance.
- This appliance is not intended for use by persons (including children) with reduced physical, sensory, or mental capabilities, or lack of experience and knowledge, unless they have been given supervision or instruction concerning use of the appliance by a person responsible for their safety.
- Children should be properly supervised around this appliance.
- Do not climb, stand, or hang on the appliance or door or allow children or animals to do so. Do not climb into the appliance or allow children or animals to do so. Death or serious injury could occur or the appliance could be damaged.
- Be careful not to pinch fingers when opening and closing the doors. Be careful when opening and closing the doors when children are in the area.
- Open and close the doors with care. Doors opened too quickly or forcefully may cause injury or damage to the appliance or surrounding equipment.
- Do not use combustible spray or place volatile or flammable substances in or near the appliance. They might catch fire.
- Keep the area around the appliance clean. Dirt, dust, or insects in the appliance could cause harm to individuals or damage to the equipment.
- Do not throw anything onto the shelves or load any single shelf with more than 120 lb. (54.5 kg) of product. They might fall off and cause injury.
- Do not place anything on top of the appliance. Foreign objects or moisture could enter the appliance and result in electric shock or fire.
- This appliance is designed only for temporary storage of food. Employ sanitary methods. Use for any other purposes (for example, storage of chemicals or medical supplies such as vaccine and serum) could cause deterioration of stored items.
- Do not block the cabinet air inlet or outlet, otherwise cooling performance may be reduced.
- Do not tightly pack the cabinet. Allow some space between items to ensure good air flow. Also allow space between items and interior surfaces.

⚠ WARNING, continued

- Do not place any product on the floor of the cabinet. All product must be placed on properly installed shelves for reach-in and pass-thru models or on a food cart for roll-in and roll-thru models.
- Do not put warm or hot foods in the cabinet. Let them cool first, or they will raise the cabinet temperature and could deteriorate other foods in the cabinet or overload the appliance.
- All foods should be wrapped in plastic film or stored in sealed containers. Otherwise foods may dry up, pass their smells onto other foods, cause frost to develop, result in poor appliance performance, or increase the likelihood of cross-contamination. Certain dressings and food ingredients, if not stored in sealed containers, may accelerate corrosion of the evaporator, resulting in failure.
- Do not store items near the air outlet. They might freeze up and crack or break causing a risk of injury or contamination of other food.

NOTICE

- Protect the floor when moving the appliance to prevent damage to the floor.
- Keep ventilation openings, in the appliance enclosure or in the built-in structure, clear of obstruction. Do not place anything on top of the appliance. Blockage of airflow could negatively affect performance and damage the appliance.
- To prevent deformation or cracks, do not spray insecticide onto the plastic parts or let them come into contact with oil.
- To avoid damage to the gasket, use only the door handle when opening and closing.

I. Installation Instructions

⚠ WARNING

- This appliance must be installed in accordance with all applicable national, state, and local regulations.
- Appliance is heavy. Use care when lifting or positioning. Work in pairs when needed to prevent injury or damage.
- Do not tilt the appliance more than 45°.

A. Location

⚠ WARNING

- This appliance is not intended for outdoor use.
- Normal operating ambient temperature must be within 45°F to 100°F (7°C to 38°C). Operation of the appliance, for extended periods, outside of this normal temperature range may affect appliance performance.

For best operating results:

- The appliance should not be located next to ovens, grills, or other high heat producing equipment.
- The location should provide a firm and level foundation for the appliance.
- The appliance should not be located in a corrosive environment.
- The appliance should be a minimum of 4" (11 cm) from side walls. More clearance may be necessary depending on the door combination of the appliance.
- A minimum of 10" (25 cm) overhead clearance should be provided for proper ventilation.

B. Checks Before Installation

⚠ WARNING

Refer to the nameplate for electrical specifications. The nameplate is located on the right side wall of the cabinet interior. For more electrical connection details, see "I.D. Electrical Connection." We reserve the right to make specification and design changes without prior notice.

- Visually inspect the exterior of the shipping package and immediately report any damage to the carrier. Upon opening the package, any concealed damage should also be immediately reported to the carrier.
- Remove the shipping carton, tape, and packing material. Remove the protective plastic film from the exterior panels on all models and from the interior door panels on solid door models. If the appliance is exposed to the sun or to heat, remove the film after the appliance cools.
- Remove all accessory containers before discarding the packing materials. Dispose of all packing materials in a proper and environmentally responsible manner.
- Check for missing or damaged accessories.

C. Setup

1. Remove the Appliance from the Pallet

1) Move as close to the final location as possible.

2) Remove the 2 bolts securing the appliance to the pallet, then remove the appliance from the pallet. Block the appliance securely at a height of 8" (20 cm) off the floor. Do not lay the appliance down.

3) Attach the adjustable legs or casters to the bottom of the appliance. Locking casters should be attached to the front of the appliance.

2. Optional Overflow Pan Installation (if applicable)

Optional overflow pan kits are available for the unlikely event that water cannot evaporate from the condensate pan at a high enough rate.

a) Reach-In Optional Overflow Pan (HS-3521)

1) Attach the overflow pan brackets by engaging the tabs on the brackets through the holes in the bottom of the appliance and securing with the 4 mounting screws provided. See Fig. 1.

2) Slide the plastic overflow pan into place under the vinyl hose on the back of the cabinet.

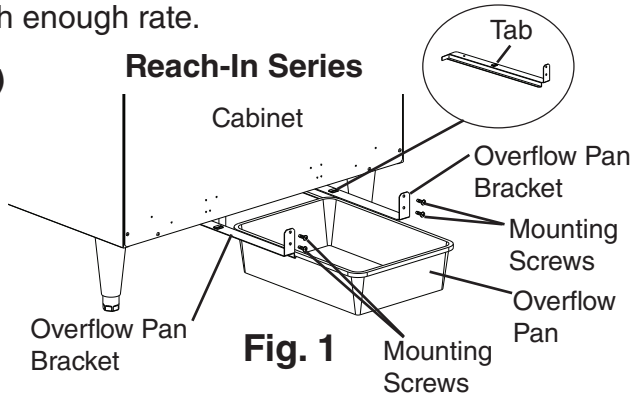

Fig. 1

b) Pass-Thru Optional Overflow Pan (HS-3560)

1) Attach the overflow pan brackets by engaging the tabs on the brackets through the holes in the bottom of the appliance and securing with the 2 mounting screws provided. See Fig. 2.

2) Slide the plastic overflow pan into place under the vinyl hose on the side of the cabinet.

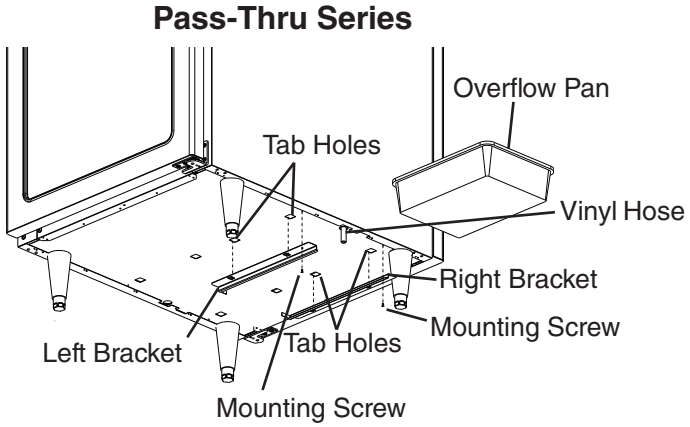

Fig. 2

3. RFH1-SSB(-HS)(-HSE) Reservoir Assembly Installation

The reservoir collects condensate water from the evaporators of both the refrigerator and freezer. When the reservoir fills, the float switch activates the condensate pump. Condensate water is pumped into the condensate pan for evaporation.

WARNING! Verify that the appliance is unplugged before installing the reservoir.

1) Remove the rear panel and rear cover.
2) Uncoil the suction hose and route to the bottom of the unit. See Fig. 3.
3) Remove the reservoir and float switch from the accessory bag. Uncoil the float switch cable only. ***NOTICE!*** **Do not remove the nylon ties securing the plastic bag to the reservoir and protecting the float switch connection.** Next, plug the open float switch connector into the pump. See Fig. 4.

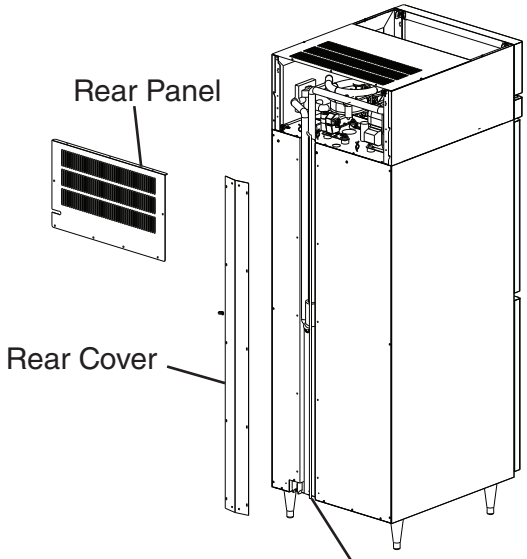

Fig. 3

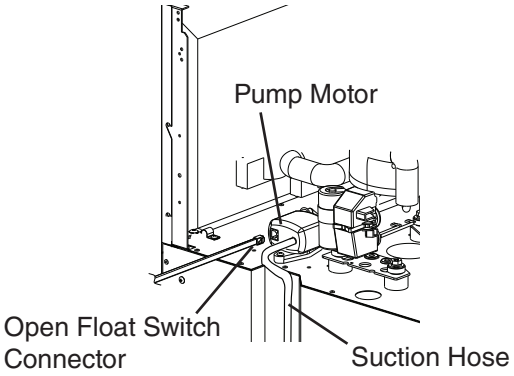

Fig. 4

4) Route the float switch cable with the suction hose down to the bottom of the unit. See Fig. 5.

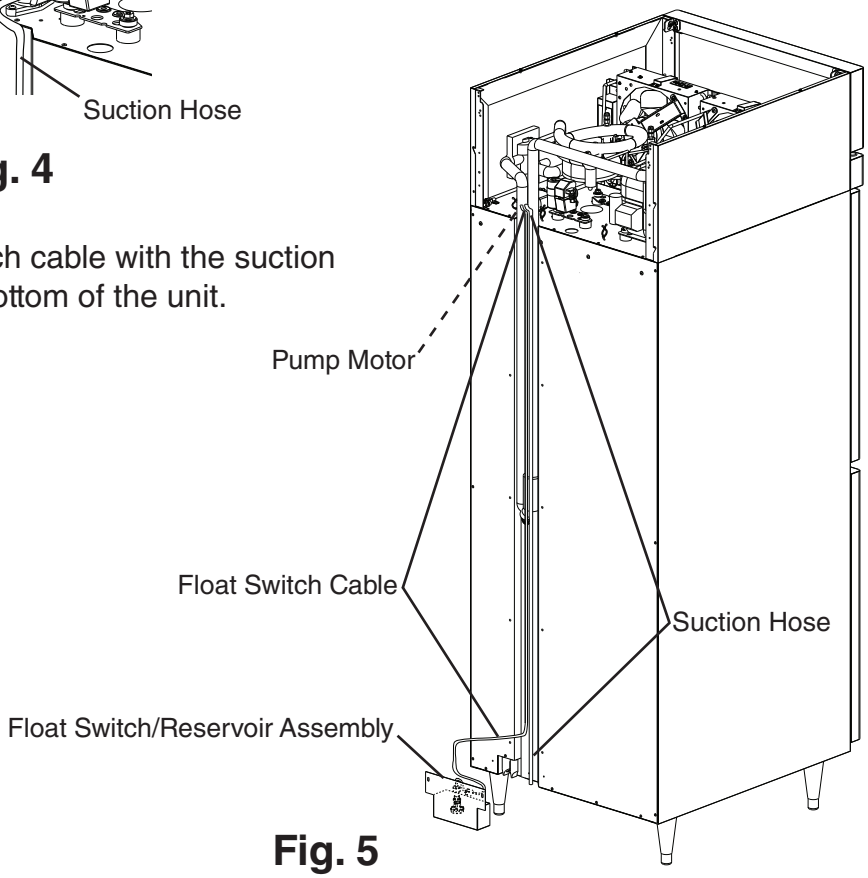

Fig. 5

5) Replace the rear panel and rear cover in their original positions.

6) Remove the suction hose bracket from the accessory bag. Using 1 screw provided in the accessory bag, attach the suction hose bracket to the rear of the appliance. Secure the suction hose using the suction hose bracket. See Fig. 6. ***NOTICE!*** **Confirm that the tip of the suction hose extends 3/8" (10 mm) below the suction hose bracket and that the suction hose is not pinched or kinked.**

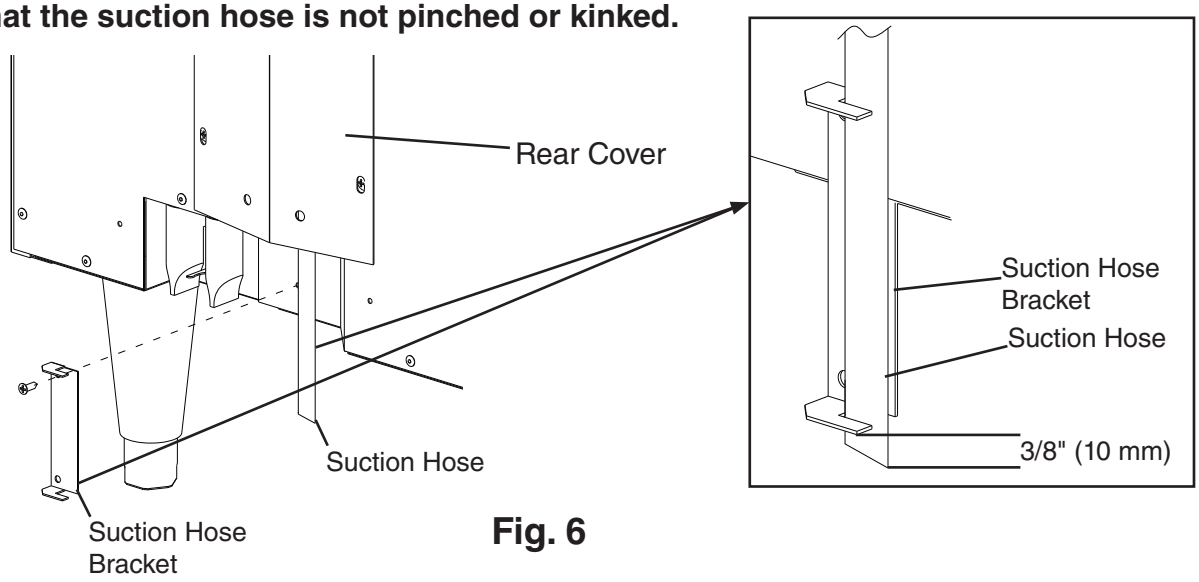

Fig. 6

7) Next, Secure the float switch to the pre-installed float switch mounting bracket. See Fig. 7. ***NOTICE!*** **Confirm that the float switch moves freely.**

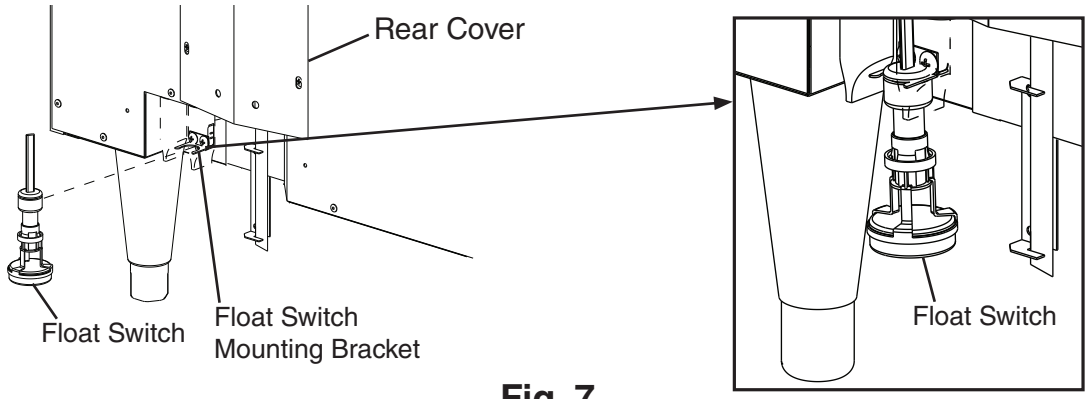

Fig. 7

8) Using 2 screws provided in the accessory bag, attach the reservoir to the rear of the unit. See Fig. 8.

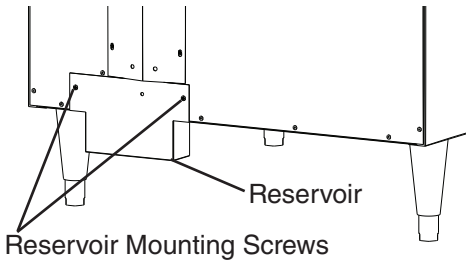

Fig. 8

4. Check the Refrigeration Circuit

- Visually check that the refrigerant lines do not rub or touch other lines or surfaces and that the fan blades turn freely.
- Check that the compressor is snug on all mounting pads.

5. Position and Level the Appliance

- Appliances with legs: Level the appliance in both the front-to-back and side-to-side directions. Turn the bottom portion of the legs for height adjustment.
- Appliances with casters: Place the appliance in its final location, then lock the front casters.

6. Install the Shelves (if applicable)

Shelf support clips are provided in the accessory pack.

1) Place the shelf support clips into the pilasters. Indexing holes are provided on the pilasters in evenly spaced intervals to assist you in positioning the support clips at the same height.

2) 2 and 3 section appliances may be equipped with center shelves which should be installed after the main shelves are in place. The center shelf kit contains additional clip(s) which support the center shelf when the main shelves on one side of the cabinet are not aligned with the main shelves on the other side of the cabinet. See Fig. 9. **WARNING! Without this additional support, the shelf assembly could tip under adverse loading conditions.**

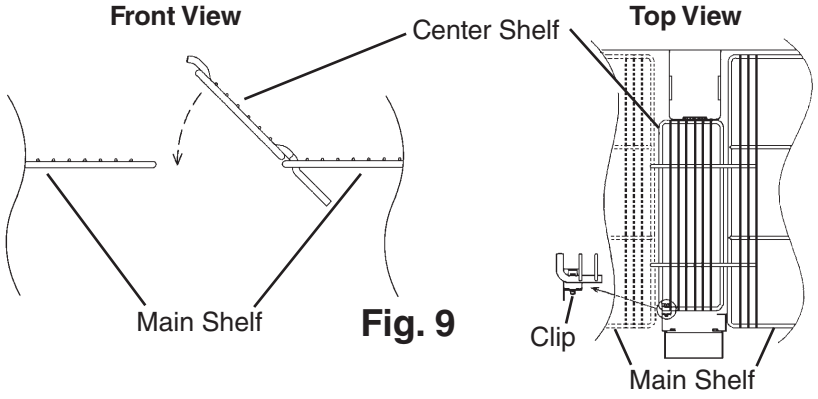

Fig. 9

7. Install the Handles (Glass Door Appliances)

On glass door appliances, install the door handle(s) as illustrated. See Fig. 10.

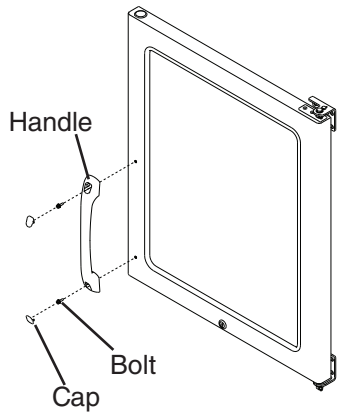

Fig. 10

8. Food Cart Ramp (Roll-In/Roll-Thru Appliances)

1) Attach the taper collars and countersunk screws to the body. See Fig. 11.

2) Attach the ramp filler to the food cart ramp, on the side opposite the door hinge.

3) Hook the food cart ramp over the taper collars.

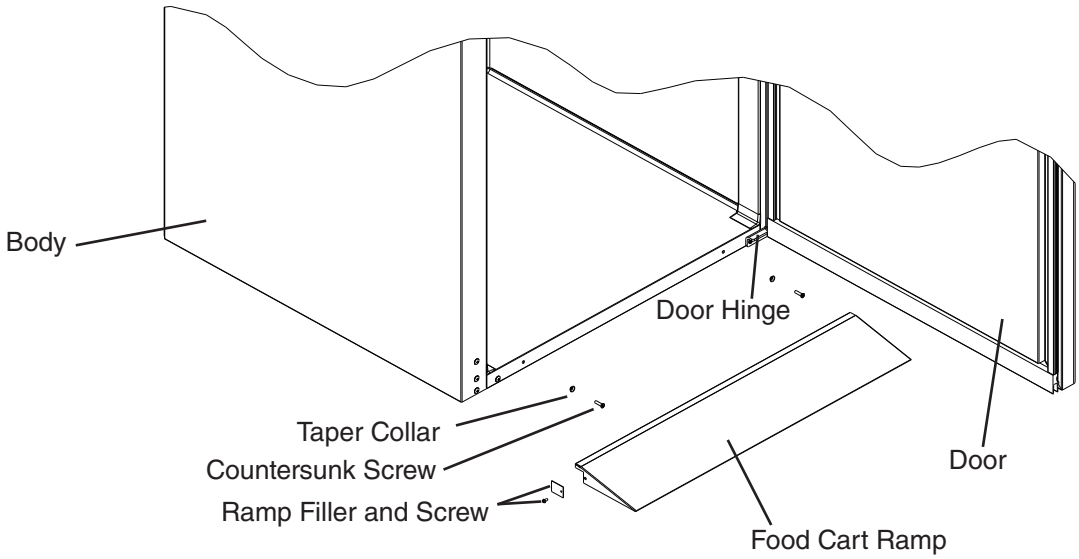

Fig. 11

D. Electrical Connection

⚠ WARNING

- Electrical connection must meet national, state, and local electrical code requirements. Failure to meet these code requirements could result in death, electric shock, serious injury, fire, or severe damage to equipment.
- This appliance requires an independent power supply of proper capacity. See the nameplate for electrical specifications. Failure to use an independent power supply of proper capacity can result in a tripped breaker, blown fuse, damage to existing wiring, or component failure. This could lead to heat generation or fire.
- **THIS APPLIANCE MUST BE GROUNDED:** Failure to properly ground the appliance may result in death, electric shock, or fire.
  Corded Models: Corded models are equipped with either a NEMA 5-15 three-prong grounding plug or a NEMA 5-20 three-prong grounding plug to reduce the risk of potential shock hazards. Corded models must be plugged into a properly grounded, independent 3-prong wall outlet. If the outlet is a 2-prong outlet, it is your personal responsibility to have a qualified electrician replace it with a properly grounded, independent 3-prong wall outlet. Do not remove the ground prong from the plug and do not use an adapter plug. Failure to follow these instructions may result in death, electric shock, or fire.
- **Hard-Wired Models:** Hard-wired electrical connections must be made in accordance with the instructions on the "WARNING" tag, provided with the pig tail leads in the junction box. See Fig. 12.
- To reduce the risk of electric shock, do not touch the power switch or plug with damp hands.
- Make sure the power switch is in the "OFF" position before plugging in or unplugging the appliance to reduce the risk of electric shock.
- Do not use an extension cord.
- Do not use an appliance with a damaged power cord. The power cord should not be altered, jerked, bundled, weighed down, pinched, or tangled. Such actions could result in electric shock or fire. To unplug the appliance, be sure to pull the plug, not the cord, and do not jerk the cord.
- On corded models, the GREEN ground wire in the factory-installed power cord is connected to the appliance. If it becomes necessary to remove or replace the power cord, be sure to connect the power cord's ground wire.

- Usually an electrical permit and services of a licensed electrician are required.
- The maximum allowable voltage variation is ±10 percent of the nameplate rating.

For Hard-Wired Models:

- The white lead must be connected to the neutral conductor of the power source. ***NOTICE!*** **Miswiring may result in severe damage to the appliance. See Fig. 12.**
- The opening for the power supply connection is 7/8" DIA to fit a 1/2" trade size conduit.

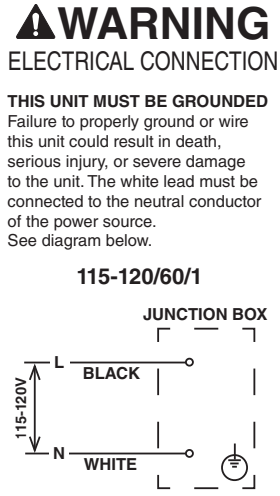

Fig. 12

E. Front Panel

1) Push the front panel up approximately 1/2" (1.3 cm) until it is disengaged from the locking collars. See Fig. 13.
2) Rotate the panel up and away from the face of the appliance until it stops.
3) Pull the front panel forward until the hinge assembly is in the locked position.

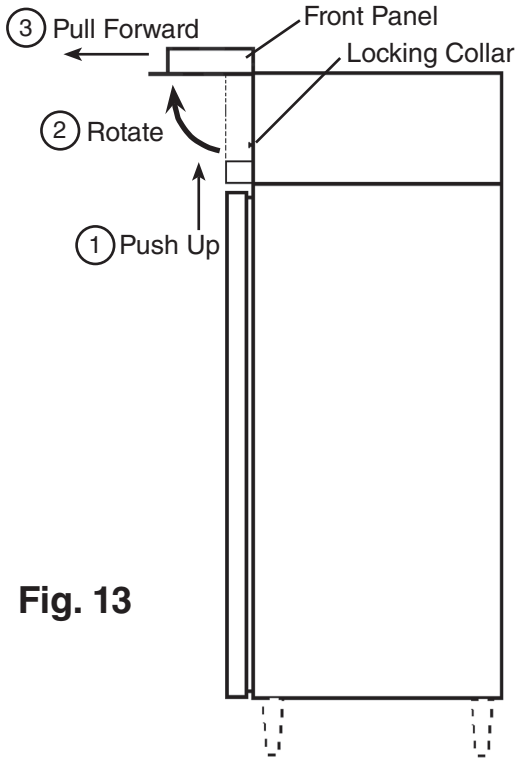

Fig. 13

F. Door Reversal

This appliance is provided with a cabinet design which, after being delivered to the installation location, permits changing of the door swing from left to right or right to left. For further details, contact your local Hoshizaki distributor or Hoshizaki Technical Support at 1-800-233-1940.

G. Final Checklist

1) Have the legs, casters, or food cart ramp been properly installed and the appliance leveled?
2) Is the appliance in a site where the ambient temperature is within 45°F to 100°F (7°C to 38°C) all year around?
3) Is there at least 4" (11 cm) clearance from side walls and 10" (25 cm) overhead clearance for proper ventilation?
4) Have the shipping carton, tape, and packing material been removed from the appliance? Has the protective plastic film been removed from both the exterior panels and the interior door panel?
5) Have the appliance and accessories been checked for shipping damage?
6) Does the electrical connection meet all national, state, and local code and regulation requirements? Has a proper ground been installed to the appliance? Has the power supply voltage been checked or tested against the nameplate rating?
7) Corded Models: Is the power supply a properly grounded, independent 3-prong wall outlet?
8) Hard-Wired Models: Have all electrical connections been made?
9) Has the optional overflow pan (if applicable) been properly installed?
10) RFH1-SSB(-HS)(-HSE): Have the float switch, suction hose bracket, and reservoir been installed? Does the float switch move freely? Is the suction hose free of kinks?
11) Have the refrigerant lines been checked to make sure they do not rub or touch other lines or surfaces? Have the fan blades been checked to make sure they turn freely? Are the compressor hold-down bolts snug?
12) Have the door handles (if applicable) been properly installed?
13) Have the shelves been properly installed?
14) Has the end user been given the instruction manual, and instructed on how to operate the appliance and the importance of the recommended periodic maintenance?
15) Has the end user been given the name and telephone number of an authorized service agent?
16) Has the warranty card been filled out and forwarded to the factory for warranty registration?

II. Operating Instructions

A. Important Notes About Usage

⚠ WARNING

- Only qualified service technicians should install and service this appliance.
- Failure to install, operate, and maintain the appliance in accordance with this manual may adversely affect safety, performance, component life, and warranty coverage.
- To reduce the risk of electric shock, do not touch the power switch or plug with damp hands.
- Do not splash, pour, or spray water directly onto or into the appliance. This might cause short circuit, electric shock, corrosion, or failure.
- This appliance is not intended for use by persons (including children) with reduced physical, sensory, or mental capabilities, or lack of experience and knowledge, unless they have been given supervision or instruction concerning use of the appliance by a person responsible for their safety.
- Children should be properly supervised around this appliance.
- Do not climb, stand, or hang on the appliance or door or allow children or animals to do so. Do not climb into the appliance or allow children or animals to do so. Death or serious injury could occur or the appliance could be damaged.
- Be careful not to pinch fingers when opening and closing the door. Be careful when opening and closing the door when children are in the area.
- Open and close the doors with care. Doors opened too quickly or forcefully may cause injury or damage to the appliance or surrounding equipment.
- Do not use combustible spray or place volatile or flammable substances in or near the appliance. They might catch fire.
- Keep the area around the appliance clean. Dirt, dust, or insects in the appliance could cause harm to individuals or damage to the equipment.
- Do not throw anything onto the shelves or load any single shelf with more than 120 lb. (54.5 kg) of product. They might fall off and cause injury.
- Do not place anything on top of the appliance. Foreign objects or moisture could enter the appliance and result in electric shock or fire.
- This appliance is designed only for temporary storage of food. Employ sanitary methods. Use for any other purposes (for example, storage of chemicals or medical supplies such as vaccine and serum) could cause deterioration of stored items.
- Do not block the cabinet air inlet or outlet, otherwise cooling performance may be reduced.
- Do not tightly pack the cabinet. Allow some space between items to ensure good air flow. Also allow space between items and interior surfaces.

⚠ WARNING, continued

- Do not place any product on the floor of the cabinet. All product must be placed on properly installed shelves for reach-in and pass-thru models or on a food cart for roll-in and roll-thru models.
- Do not put warm or hot foods in the cabinet. Let them cool first, or they will raise the cabinet temperature and could deteriorate other foods in the cabinet or overload the appliance.
- All foods should be wrapped in plastic film or stored in sealed containers. Otherwise foods may dry up, pass their smells onto other foods, cause frost to develop, result in poor appliance performance, or increase the likelihood of cross-contamination. Certain dressings and food ingredients, if not stored in sealed containers, may accelerate corrosion of the evaporator, resulting in failure.
- Do not store items near the air outlet. They might freeze up and crack or break causing a risk of injury or contamination of other food.

NOTICE

- Protect the floor when moving the appliance to prevent damage to the floor.
- Keep ventilation openings, in the appliance enclosure or in the built-in structure, clear of obstruction. Blockage of airflow could negatively affect performance and damage the appliance.
- To prevent deformation or cracks, do not spray insecticide onto the plastic parts or let them come into contact with oil.
- To avoid damage to the gasket, use only the door handle when opening and closing.
- Do not leave the doors open.

B. Startup

⚠ WARNING
All parts are factory-adjusted. Improper adjustments may adversely affect safety, performance, component life, and warranty coverage.

IMPORTANT
• At startup, there is a 2 1/2 minute delay before the compressor starts. • On Dual Temp series, there is a delay of approximately 10 seconds between one compressor start (i.e., freezer) and the next compressor start (i.e., refrigerator).

1) Open the front panel for access to the power switch—located on the front of the control box. Make sure the power switch is in the "OFF" position.
2) Plug the appliance into the electrical outlet.
3) Move the power switch to the "ON" position to start the cool-down process. Close the front panel.
4) Allow the appliance to cool down prior to loading it with food products.

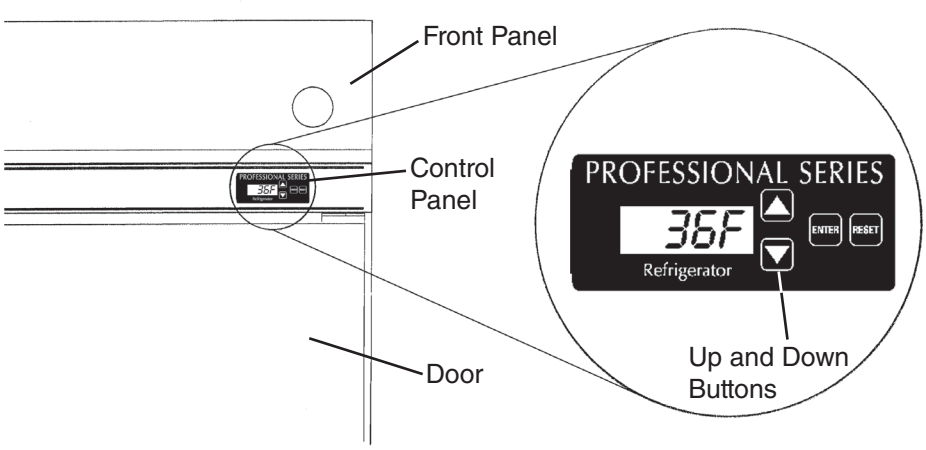

Fig. 14

C. Cabinet Temperature

1. Temperature Display

- The cabinet temperature is displayed on the control panel. See Fig. 14. The display default is °F, but it can be changed to read °C. To change, see "II.C.3. Changing the Temperature Display Scale (°F or °C)".
- The cabinet temperature is updated every 20 seconds.

2. Adjusting the Temperature Setpoint

The temperature setpoint is the value for the average cabinet temperature. The temperature differential for the compressor to turn on and off is ±3°F (±1.7°C) of the temperature setpoint. For example, for a refrigerator temperature setpoint of 36°F (2°C), the compressor comes on at 39°F (3.7°C), and the compressor goes off at 33°F (0.3°C). If necessary, adjust the temperature setpoint as follows:

1) Press and hold the up and down buttons simultaneously for 3 seconds. The current temperature setpoint will be displayed.
2) To change the temperature setpoint, press the up or down button until the desired value is displayed.
   - **Refrigerators:** The temperature setpoint is adjustable between 36°F and 50°F (2°C and 10°C). The factory default for refrigerators is 36°F (2°C).
   - **Freezers:** The temperature setpoint is adjustable between -10°F and 25°F (-23°C and -4°C). The factory default is -3°F (-19°C).
3) Press the "ENTER" button to set the value and view the next setting. If no change in the value is desired, press the "ENTER" button repeatedly until you return to the normal display. If you do not cycle through the menu and no button is pressed in 15 seconds, the display returns to normal and the temperature setpoint remains unchanged.

3. Changing the Temperature Display Scale (°F or °C)

To change the display scale, follow the steps below.

1) Press and hold the up and down buttons simultaneously for 3 seconds. Press the "ENTER" button until the F or C temperature display scale is displayed.
2) To change the temperature display, press the up or down button until the desired scale is displayed. The factory default is °F.
3) Press the "ENTER" button to set the value and return to normal display mode. If you do not return to the normal display mode and no button is pressed in 15 seconds, the display returns to normal and the temperature display remains unchanged.

D. Defrost

1. Refrigerator

Refrigerators use an off-cycle, temperature-initiated or time-initiated defrost. The cabinet temperature is displayed during defrost.

- **Temperature-Initiated Defrost:** When the defrost thermistor cools to 13°F (-10.6°C), defrost begins. When the defrost thermistor warms to 40°F (4.4°C), defrost terminates. After defrost, there is a 2 1/2 minute delay before the compressor starts.
- **Time-Initiated Defrost:** The time-initiated defrost is factory set at 0 for normal operating conditions. Before changing the time-initiated defrost setting, contact your local Hoshizaki distributor or Hoshizaki Technical Support at 1-800-233-1940 for setting recommendations. If the factory time-initiated defrost setting is moved from 0 defrosts per 24 hours, the appliance defrosts the number of times selected per day (6=6 defrosts per day (every 4 hours)). When the defrost thermistor warms to 40°F (4.4°C), defrost terminates. If necessary, adjust the time-initiated defrost frequency as follows:

1) Press and hold the up and down buttons simultaneously for 3 seconds. Press the "ENTER" button until "dF" is displayed.

2) To change the time-initiated defrost frequency, press the up or down button until the desired value is displayed. The time-initiated defrost frequency is adjustable between 0 and 12 defrosts per 24 hours. The factory default is 0.

3) To save the value, press the "ENTER" button repeatedly until you have cycled through the menu and the appliance returns to the normal display mode. If you do not cycle through the menu and no button is pressed in 15 seconds, the display returns to normal and the defrost frequency remains unchanged.

Note: The change in the defrost setting will take effect after the next defrost based on the previous setting. To make this change in interval timing take effect immediately, turn the appliance off and back on. The next time-initiated defrost will take effect "x" hours after power is resupplied. For example, if the setting is dF 6, x=4, the next defrost occurs 4 hours from the time that power is applied.

Primary defrost termination is controlled by the defrost thermistor. However, 1 additional defrost termination safety is present:

- Time-Termination - 1 hour maximum.

2. Freezer

Freezers use a time-initiated, heated defrost. The cabinet temperature is not displayed during defrost, "dEF" is displayed in its place. It is preset at the factory to defrost 6 times per day (once every 4 hours) for general conditions. However, if it is determined that this interval does not suit the actual conditions the appliance is exposed to, the interval can be changed. Before changing the time-initiated defrost setting, contact your local Hoshizaki distributor or Hoshizaki Technical Support at 1-800-233-1940 for setting recommendations. The defrost is a heated defrost, and therefore will have a tendency to raise the cabinet temperature. When the defrost thermistor warms to 100°F (37.8°C), defrost terminates. After defrost, there is a 5 minute delay before the compressor starts. If necessary, adjust the defrost frequency as follows:

1) Press and hold the up and down buttons simultaneously for 3 seconds. Press the "ENTER" button until the dF frequency is displayed.

2) To change the time-initiated defrost frequency, press the up and down buttons until the desired value is displayed. The defrost frequency is adjustable between 1 and 12 defrosts per 24 hours. The factory default for freezers is 6.

3) To save the value, press the "ENTER" button repeatedly until you have cycled through the menu and the appliance returns to the normal display mode. If you do not cycle through the menu and no button is pressed in 15 seconds, the display will return to normal and the defrost frequency will remain unchanged.

Note: The change in the defrost setting will take effect after the next defrost based on the previous setting. To make this change in interval timing take effect immediately, turn the appliance off and back on. The next time-initiated defrost will take effect "x" hours after power is resupplied. For example, if the setting is df 6, x=4, the next defrost occurs 4 hours from the time that power is applied.

Primary defrost termination is controlled by the defrost thermistor. However, 2 additional defrost termination safeties are present:

- Time-Termination - 1 hour maximum.
- Temperature-Termination - Measured by a separate device that is in-line with the heaters and independent of the control board.

E. Food Storage

- This appliance is designed only for temporary storage of food. Employ sanitary methods. Use for any other purposes (for example, storage of chemicals or medical supplies such as vaccine and serum) could cause deterioration of stored items.
- Do not block the cabinet air inlet or outlet, otherwise cooling performance may be reduced.
- Do not tightly pack the cabinet with food. Allow some space between items/containers to ensure good air flow. Also allow space between food product and interior surfaces.
- Do not put warm or hot foods in the cabinet. Let them cool first, or they will raise the cabinet temperature and could deteriorate other foods in the cabinet or overload the appliance.
- All foods should be wrapped in plastic film or packed in a container. Otherwise foods may dry up, pass their smells onto other foods, cause frost to develop, result in poor appliance performance, or increase the likelihood of cross-contamination. Certain dressings and food ingredients, if not stored in containers, may accelerate corrosion of the evaporator, resulting in failure.

F. Perimeter Frame Heater

This appliance is equipped with a perimeter frame heater. The perimeter frame heater is controlled by the perimeter frame heater switch located on the control box. To help prevent the formation of condensation on the front frame, turn the perimeter frame heater on (perimeter frame heater switch red marking visible). If operating the appliance under conditions where condensation does not form, this heater may be turned off (perimeter frame heater switch red marking hidden).

G. Safety Devices

1. Compressor External and Internal Overloads

If a combined temperature/amperage value is above the limit specified by the compressor manufacturer, the compressor overload operates independently to turn off the compressor. The compressor overload de-energizes the compressor until the temperature/amperage value returns to an acceptable level.

2. Short-Cycle Protection

- There is a 2 1/2 minute minimum off-time and on-time for the compressor.
  Note: Time may vary with compressor overload or high-pressure switch activation.

3. High-Pressure Switch

If pressure on the high-side of the appliance exceeds Hoshizaki specifications, the high-pressure switch activates and interrupts the compressor circuit (internal to control board), de-energizing the compressor until the pressure returns to an acceptable level.

H. Alarm Safeties

This appliance incorporates visual and audible alarm safeties built into the control board. Should one of the alarms occur, follow the instructions in the table below to address the alarm. The alarm code and the cabinet temperature are displayed in 2-second intervals in the display window when an alarm occurs. An audible alarm also sounds until the error is corrected and/or the control board is reset.

Alarm Signals			
Alarm Code	**No. of Beeps (every 10 sec.)**	**Problem**	**Reset Options**
E1	3	High Temperature Alarm **Refrigerator:** Cabinet temperature has exceeded set temperature by 10°F (5.6°C) for more than 2 hours. **Freezer:** Cabinet temperature has exceeded set temperature by 25°F (13.9°C) for more than 4 hours.	Press the "RESET" button. If temperature has returned to the setpoint range, alarm will be silenced and "E1" clears. If the temperature has not returned to the sepoint range, the alarm is silenced for 5 minutes and "E1" continues to flash. If obvious corrections such as closing doors and cleaning the air filter and/or condenser do not bring cabinet temperature back in range, call a qualified service technician.
E2	4	Low Temperature Alarm Cabinet temperature has remained below the setpoint temperature by 8°F (4.4°C) for more than 1 hour.	Press the "RESET" button. If the temperature has returned to the setpoint range, the alarm will be silenced and "E2" clears. If the temperature has not returned to the setpoint range, the alarm will be silenced for 5 minutes and "E2" continues to flash. If obvious corrections do not bring the temperature back in range, call a qualified service technician.

Alarm Signals			
Alarm Code	**No. of Beeps (every 10 sec.)**	**Problem**	**Reset Options**
E3	5	Defrost Alarm Freezer Only: Display alternates between "E3" and "dEF". Defrost has taken longer than 1 hour. Control board has terminated defrost.	During alarm, press the "RESET" button. Alarm stops and "E3" clears. If 4 consecutive defrosts take more than 1 hour, call a qualified service technician.
E4	6	High Pressure Alarm Compressor discharge pressure is outside of the normal operating range. The high pressure switch has been triggered 3 or more times in 1 hour. The air filter and/or condenser may require cleaning.	Clean the air filter and/or condenser if necessary. Press the "RESET" button. If the high pressure switch resets automatically, the alarm is silenced and "E4" clears. If the high pressure switch trips 5 times in 1 hour, the compressor stops and will not re-start. A service technician must be called. After the 5th pressure trip, the alarm can be silenced for 1 hour by pressing the "RESET" button.
E6	8	High Voltage Alarm Line voltage has been too high for at least 10 seconds. To protect the compressor, the compressor shuts down.	The alarm automatically resets when acceptable voltage is detected. Press the "RESET" button to silence the alarm for 5 minutes. If this alarm occurs frequently, call a qualified service technician.
E7	9	Low Voltage Alarm Line voltage has been too low for at least 10 seconds. To protect the compressor, the compressor shuts down.	The alarm automatically resets when acceptable voltage is detected. Press the "RESET" button to silence the alarm for 5 minutes. If this alarm occurs frequently, call a qualified service technician.
E8	Constant	Cabinet Thermistor Malfunction Alarm Cabinet thermistor has failed.	Call a qualified service technician. During alarm, press the "RESET" button to silence the alarm for 5 minutes.
E9	Constant	Defrost Thermistor Malfunction Alarm Defrost thermistor has failed.	Call a qualified service technician. During alarm, press the "RESET" button to silence the alarm for 5 minutes.
E10 **(Dual Temp Series)**	10	Communication Alarm	When communication is restored, alarm resets. During alarm, press the "RESET" button to silence alarm for 18 hours.

Alarm Signals			
Alarm Code	**No. of Beeps (every 10 sec.)**	**Problem**	**Reset Options**
CF	1	Clogged Filter Alarm Condenser temperature is outside of normal operating range. Air filter and/or condenser require cleaning. ***NOTICE!* If this alarm occurs frequently, discharge temperature is consistently too high. Failure to take action could result in damage to the compressor.**	Clean the air filter and/or condenser. Allow time for the sensor to reset, then press the "RESET" button. During alarm, press the "RESET" button to silence the alarm for 2 hours. If this alarm occurs frequently, call a qualified service technician.
door	2	Door Alarm Display Only: Door open. Both Display and Beeps: Door open longer than 3 minutes.	Close the door. During alarm, press the "RESET"button to silence the alarm for 3 minutes.

I. Cooling Performance

Be sure the appliance is properly installed and located for optimum cooling performance. If cooling performance is not at its optimum level, check the following items:

- Door(s) opened too often.
- Door(s) left open. Close.
- Too packed with food or cabinet air inlet/outlet blocked. Allow some space between items/ containers to ensure good air flow.
- Warm or hot foods inside. Take them out until they cool down more.
- Ambient temperature too high. Avoid installation near high heat producing equipment or exposure to direct sunlight.
- Cabinet temperature setting too high. Readjust it to a lower temperature.
- Appliance in defrost process. The cabinet temperature may rise temporarily during the defrost cycle, but this will not affect the food inside.

J. Cabinet Condensation

In the event condensation develops on the cabinet exterior, check the following items:

- Perimeter frame heater off. Move the perimeter frame heater switch, located on the control box, to the "ON" position (red marking visible).
- Door(s) left open, close.
- Ambient humidity too high. In high humidity areas it may be necessary to wipe off the cabinet frame occasionally.

III. Cleaning and Maintenance Instructions

A. Cleaning

⚠ WARNING

- Before cleaning the appliance, move the power switch to the "OFF" position and unplug the appliance to prevent electric shock by unexpected entrance of water into the appliance or injury by moving parts. To reduce the risk of electric shock, do not touch the power switch or plug with damp hands.
- Before cleaning the appliance, move all foods into another clean refrigerator or freezer.
- Do not splash water directly onto the appliance. This might cause short circuit, electric shock, corrosion, or failure.
- Carefully follow instructions provided with cleaning and sanitizing products.

NOTICE

- To prevent damage to the painted or plastic surfaces, do not use the following: hot water, thinner, benzine, alcohol, petroleum, soap powder, polishing powder, alkaline cleaner, acid, scouring pad and especially those strong cleaners for use on a ventilating fan or a cooking range.
- To prevent corrosion and damage to stainless steel surfaces, use only products formulated for use on stainless steel appliances. Do not use steel wool, abrasive products, or products containing sodium hypochlorite (chlorine bleach).
- Use a clean cloth for cleaning.

1. Exterior

Wipe the exterior occasionally with a clean, soft cloth. Use a damp cloth containing a neutral cleaner to wipe off oil or dirt buildup. Clean any rust colored spots using a non-abrasive cleanser.

2. Cabinet Interior

Spills should be wiped up promptly to avoid unpleasant odors. The cabinet interior should be cleaned periodically with a mild soap or detergent and warm water.

3. Door Gaskets

Door gaskets should be cleaned regularly with mild soap and warm water to remove dirt and grease.

4. Shelves

Remove and clean regularly.

5. Glass Door

Wipe the exterior occasionally with a clean, soft cloth. Use a damp cloth containing a neutral cleaner to wipe off oil or dirt build up.

B. Maintenance

⚠ WARNING

- Move the power switch to the "OFF" position and unplug the appliance before performing maintenance to prevent electric shock or injury by moving parts. To reduce the risk of electric shock, do not touch the power switch or plug with damp hands.
- Before performing maintenance, move all foods into another clean refrigerator or freezer.

1. Air Filter

A plastic mesh air filter removes dirt and dust from the air, and keeps the condenser from getting clogged. As the filter becomes clogged, the appliance's performance will be reduced. Check the filter at least twice a month. When clogged, use warm water and a neutral cleaner to wash the filter.

2. Condenser

Check the condenser (located behind the air filter) once a year and use a brush or vacuum cleaner to clean the condenser as required.

3. Power Supply Connection

If the plug or power cord is damaged, contact your local Hoshizaki service representative or local Hoshizaki distributor immediately and ask for repairs.

All other maintenance or service on this appliance should be performed in accordance with the Hoshizaki Service Manual by a qualified service technician.

IV. Preparing the Appliance for Periods of Non-Use

When shutting down the appliance for periods of non-use, follow the instructions below.

⚠ WARNING
Prevent the doors from closing to reduce the risk of children getting trapped.

NOTICE
Clean the appliance. See "III.A. Cleaning" for details.

1) Before shutting down the appliance, move the stored food into another refrigerator or freezer.
2) Move the power switch to the "OFF" position and unplug the appliance.
   WARNING! To reduce the risk of electric shock, do not touch the power switch or plug with damp hands.

V. Disposal

When disposing of the appliance, follow the instructions below.

⚠ WARNING

Remove the door to reduce the risk of children getting trapped. Leave the shelves in place so that children may not easily climb inside.

This appliance contains refrigerant and must be disposed of in accordance with applicable national, state, and local codes and regulations. Refrigerant must be recovered by properly certified service personnel.

HOSHIZAKI AMERICA, INC.

618 Hwy. 74 South, Peachtree City, GA 30269 USA (P) 770.487.2331 (F) 770.487.3360 hoshizakiamerica.com

1A3910-010