

Fridge-freezer

[en] User manual

KI7863..

Table of contents

1 Safety 4
1.1 General information 4
1.2 Intended use 4
1.3 Restriction on user group 4
1.4 Safe transport 4
1.5 Safe installation 5
1.6 Safe use 6
1.7 Damaged appliance 8

2 Preventing material damage 9

3 Environmental protection and saving energy 9
3.1 Disposing of packaging 9
3.2 Saving energy 9

4 Installation and connection 9
4.1 Scope of delivery 9
4.2 Criteria for the installation location 10
4.3 Installing the appliance 11
4.4 Preparing the appliance for the first time 11
4.5 Connecting the appliance to the electricity supply 11

5 Familiarising yourself with your appliance 12
5.1 Appliance 12
5.2 Control panel 13

6 Features 14
6.1 Shelf 14
6.2 Variable shelf 14
6.3 Extendable shelf 14
6.4 Fruit and vegetable container with humidity control 14
6.5 Flat frozen food container 15
6.6 Butter and cheese compartment 15
6.7 Door rack 15
6.8 Accessories 15

7 Basic operation 16
7.1 Switching on the appliance 16
7.2 Operating tips 16
7.3 Switching off the appliance 16
7.4 Setting the temperature 16

8 Additional functions 17
8.1 Super cooling 17
8.2 Automatic Super freezing 17
8.3 Manual Super freezing 17
8.4 Holiday mode 18

9 Alarm 18
9.1 Door alarm 18
9.2 Temperature alarm 18

10 Refrigerator compartment 19
10.1 Tips for storing food in the refrigerator compartment 19
10.2 Chill zones in the refrigerator compartment 19
10.3 "OK" sticker 19

11 Freezer compartment 20
11.1 Freezing capacity 20
11.2 Fully utilising the freezer compartment volume 20
11.3 Tips for storing food in the freezer compartment 20
11.4 Tips for freezing fresh food 20
11.5 Shelf life of frozen food at −18 °C 21
11.6 Defrosting methods for frozen food 21

12 Defrosting 21
12.1 Defrosting in the refrigerator compartment 21
12.2 Defrosting in the freezer compartment 22

13 Cleaning and servicing 22
13.1 Preparing the appliance for cleaning 22

13.2 Cleaning the appliance 22
13.3 Cleaning the condensation channel and drainage hole 23
13.4 Removing the fittings..... 23
13.5 Removing appliance components..... 24

14 Troubleshooting..... 25
14.1 Power failure..... 28
14.2 Conducting an appliance self-test 28

15 Storage and disposal..... 28
15.1 Taking the appliance out of operation 28
15.2 Disposing of old appliance 28

16 Customer Service..... 29
16.1 Product number (E-Nr.) and production number (FD)..... 29

17 Technical data 29

1 Safety

Observe the following safety instructions.

1.1 General information

- Read this instruction manual carefully.
- Keep the instruction manual and the product information safe for future reference or for the next owner.
- Do not connect the appliance if it has been damaged in transit.

1.2 Intended use

This appliance is only intended to be fully fitted in a kitchen.
Only use this appliance:

- for chilling and freezing food and for making ice cubes.
- In private households and in enclosed spaces in a domestic environment.
- Up to an altitude of 2000 m above sea level.

1.3 Restriction on user group

This appliance may be used by children aged 8 or over and by people who have reduced physical, sensory or mental abilities or inadequate experience and/or knowledge, provided that they are supervised or have been instructed on how to use the appliance safely and have understood the resulting dangers.
Do not let children play with the appliance.
Cleaning and user maintenance must not be performed by children unless they are being supervised.
Children above the age of three years old and younger than eight years old may load and unload the the fridge-freezer.

1.4 Safe transport

⚠ WARNING – Risk of injury!
The high weight of the appliance may result in injury when lifted.
▶ Do not lift the appliance on your own.

1.5 Safe installation

⚠ WARNING – Risk of electric shock!

Incorrect installation is dangerous.

- ▸ Connect and operate the appliance only in accordance with the specifications on the rating plate.
- ▸ Connect the appliance to a power supply with alternating current only via a properly installed socket with earthing.
- ▸ The protective conductor system of the domestic electrical installation must be properly installed.
- ▸ Never equip the appliance with an external switching device, e.g. a timer or remote control.
- ▸ When the appliance is installed, the mains plug of the power cord must be freely accessible. If free access is not possible, an all-pole isolating switch must be installed in the permanent electrical installation according to the installation regulations.
- ▸ When installing the appliance, check that the power cable is not trapped or damaged.

If the insulation of the power cord is damaged, this is dangerous.

- ▸ Never let the power cord come into contact with heat sources.

⚠ WARNING – Risk of explosion!

If the appliance's ventilation openings are sealed, a leak in the refrigeration circuit may result in a flammable mixture of gas and air.

- ▸ Keep ventilation openings, in the appliance enclosure or in the built-in structure, clear of obstruction.

⚠ WARNING – Risk of fire!

It is dangerous to use an extended power cord and non-approved adapters.

- ▸ Do not use extension cables or multiple socket strips.
- ▸ If the power cord is too short, contact Customer Service.
- ▸ Only use adapters approved by the manufacturer.

Portable multiple socket strips or portable power supply units may overheat and cause a fire.

- ▸ Do not place portable multiple socket strips or power supply units on the back of the appliance.

1.6 Safe use

⚠ WARNING – Risk of electric shock!
An ingress of moisture can cause an electric shock.
- ▸ Only use the appliance in enclosed spaces.
- ▸ Never expose the appliance to intense heat or humidity.
- ▸ Do not use steam- or high-pressure cleaners to clean the appliance.

⚠ WARNING – Risk of suffocation!
Children may put packaging material over their heads or wrap themselves up in it and suffocate.
- ▸ Keep packaging material away from children.
- ▸ Do not let children play with packaging material.

Children may breathe in or swallow small parts, causing them to suffocate.
- ▸ Keep small parts away from children.
- ▸ Do not let children play with small parts.

⚠ WARNING – Risk of explosion!
If the cooling circuit is damaged, flammable refrigerant may escape and explode.
- ▸ To accelerate the defrosting process, do not use any other mechanical devices or means other than those recommended by the manufacturer.
- ▸ If food is stuck to the freezer compartment, loosen it with a blunt implement such as the handle of a wooden spoon.

Products which contain flammable propellants and explosive substances may explode, e.g. spray cans.
- ▸ Do not store products which contain flammable propellants (e.g. spray cans) or explosive substances in the appliance.

⚠ WARNING – Risk of fire!
Electrical devices within the appliance may cause a fire, e.g. heaters or electric ice makers.
- ▸ Do not operate electrical devices within the appliance.

⚠ WARNING – Risk of injury!

Containers that contain carbonated drinks may burst.

- ▸ Do not store containers that contain carbonated drinks in the freezer compartment.

Injury to the eyes caused by escaping flammable refrigerant and hazardous gases.

- ▸ Do not damage the tubes of the refrigerant circuit or the insulation.

⚠ WARNING – Risk of cold burns!

Contact with frozen food and cold surfaces may cause burns by refrigeration.

- ▸ Never put frozen food straight from the freezer compartment into your mouth.
- ▸ Avoid prolonged contact of the skin with frozen food, ice and surfaces in the freezer compartment.

⚠ CAUTION – Risk of harm to health!

To prevent food from being contaminated, you must observe the following instructions.

- ▸ If the door is open for an extended period of time, this may lead to a considerable temperature increase in the compartments of the appliance.
- ▸ Regularly clean the surfaces that may come into contact with food and accessible drain systems.
- ▸ Store raw meat and fish in suitable containers in the refrigerator so that they do not touch or drip on other food.
- ▸ If the fridge/freezer is empty for an extended period of time, switch off the appliance, defrost it, clean it and leave the door open to prevent the formation of mould.

Metal or metal-style parts in the appliance may contain aluminium. If acidic food comes into contact with aluminium in the appliance, aluminium foil ions may pass into the food.

- ▸ Do not consume soiled food.

1.7 Damaged appliance

⚠ WARNING – Risk of electric shock!

If the appliance or the power cord is damaged, this is dangerous.

- ▸ Never operate a damaged appliance.
- ▸ Never pull on the power cord to unplug the appliance. Always unplug the appliance at the mains.
- ▸ If the appliance or the power cord is damaged, immediately unplug the power cord or switch off the fuse in the fuse box.
- ▸ Call customer services. → *Page 29*

Incorrect repairs are dangerous.

- ▸ Repairs to the appliance should only be carried out by trained specialist staff.
- ▸ Only use genuine spare parts when repairing the appliance.
- ▸ If the power cord of this appliance is damaged, it must be replaced by the manufacturer, the manufacturer's Customer Service or a similarly qualified person in order to prevent any risk.

⚠ WARNING – Risk of fire!



If the tubes are damaged, flammable refrigerant and harmful gases may escape and ignite.

- ▸ Keep naked flames and ignition sources away from the appliance.
- ▸ Ventilate the room.
- ▸ Switch off the appliance. → *Page 16*
- ▸ Unplug the appliance from the mains or switch off the circuit breaker in the fuse box.
- ▸ Call after-sales service. → *Page 29*

2 Preventing material damage

ATTENTION!
Using the base, runners or appliance doors as a seat surface or climbing surface may damage the appliance.
- ▸ Do not stand or support yourself on the base, runners or doors.

Contamination with oil or fat may cause plastic parts and door seals to become porous.
- ▸ Keep plastic parts and door seals free of oil and grease.

Metal or metal-style parts in the appliance may contain aluminium. Aluminium reacts when it comes into contact with acidic foods.
- ▸ Do not store unpackaged food in the appliance.

3 Environmental protection and saving energy

3.1 Disposing of packaging

The packaging materials are environmentally compatible and can be recycled.
- ▸ Sort the individual components by type and dispose of them separately.

3.2 Saving energy

If you follow these instructions, your appliance will use less power.

Selecting the installation location
- Keep the appliance out of direct sunlight.
- Install the appliance as far away as possible from heating elements, cookers and other heat sources:
  - Maintain a 30 mm clearance to electric or gas cookers.
  - Maintain a 300 mm clearance to oil or solid-fuel cookers.
- Use a niche depth of 560 mm.
- Never cover or block the external ventilation openings.

Saving energy during use

Note: The arrangement of the fittings does not affect the energy consumption of the appliance.
- Open the appliance only briefly and then close it carefully.
- Never cover or block the interior ventilation openings or the exterior ventilation openings.
- Transport purchased food in a cool bag and place in the appliance quickly.
- Allow warm food and drinks to cool down before storing them.
- Thaw frozen food in the refrigerator compartment to utilise the low temperature of the food.
- Always leave some space between the food and to the back panel.

4 Installation and connection

4.1 Scope of delivery

After unpacking all parts, check for any transport damage and for completeness of delivery.
If you have any complaints, contact your dealer or our after-sales service → *Page 29*.

The delivery consists of the following:
- Built-in appliance

- Equipment and accessories[1]
- Installation material
- Installation instructions
- User manual
- Customer service directory
- Warranty enclosure[2]
- Energy label
- Information on energy consumption and noises

4.2 Criteria for the installation location

⚠ WARNING
Risk of explosion!
If the appliance is in a space that is too small, a leak in the refrigeration circuit may result in a flammable mixture of gas and air.
- ▸ Only install the appliance in a space with a volume of at least 1 m^3 per 8 g refrigerant. The volume of refrigerant is indicated on the rating plate. → *"Appliance", Fig.* **1**/5, *Page 13*

The weight of the appliance ex works may be up to 75 kg depending on the model.
The subfloor must be sufficiently stable to bear the weight of the appliance.

Permitted room temperature

The permitted room temperature depends on the appliance's climate class.
The climate class can be found on the rating plate. → *"Appliance", Fig.* **1**/5, *Page 13*

Climate class	Permitted room temperature
SN	10 °C to 32 °C
N	16 °C to 32 °C
ST	16 °C to 38 °C
T	16 °C to 43 °C

The appliance is fully functional within the permitted room temperature.
If an appliance with climate class SN is operated at colder room temperatures, the appliance will not be damaged up to a room temperature of 5 °C.

Niche dimensions

Observe the niche dimensions if you install your appliance in the niche. If this is not the case, problems may occur when installing the appliance.

Niche depth

Install the appliance in the recommended niche depth of 560 mm.
If the niche depth is smaller, the energy consumption increases slightly.
The niche depth must be a minimum 550 mm.

Niche width

An inside niche width of at least 560 mm is required for the appliance.

Over-and-under and side-by-side installation

If you want to install 2 refrigerating appliances one over the other or side by side, you must maintain a clearance of at least 150 mm between the appliances. Selected appliances can be installed without a minimum clearance. Ask your dealer or kitchen planner about this.

[1] Depending on the appliance specifications

[2] Not in all countries

4.3 Installing the appliance

- ▸ Install the appliance in accordance with the enclosed installation instructions.

4.4 Preparing the appliance for the first time

1. Remove the informative material.
2. Remove the protective foil and transit bolts, e.g. remove the adhesive strips and carton.
3. Clean the appliance for the first time. → *Page 22*

4.5 Connecting the appliance to the electricity supply

1. Insert the mains plug of the appliance's power cable in a socket nearby.

   The connection data of the appliance can be found on the rating plate. → *"Appliance", Fig.* **1**/5, *Page 13*
2. Check the mains plug is inserted properly.

✔ The appliance is now ready for use.

5 Familiarising yourself with your appliance

5.1 Appliance

You can find an overview of the parts of your appliance here.

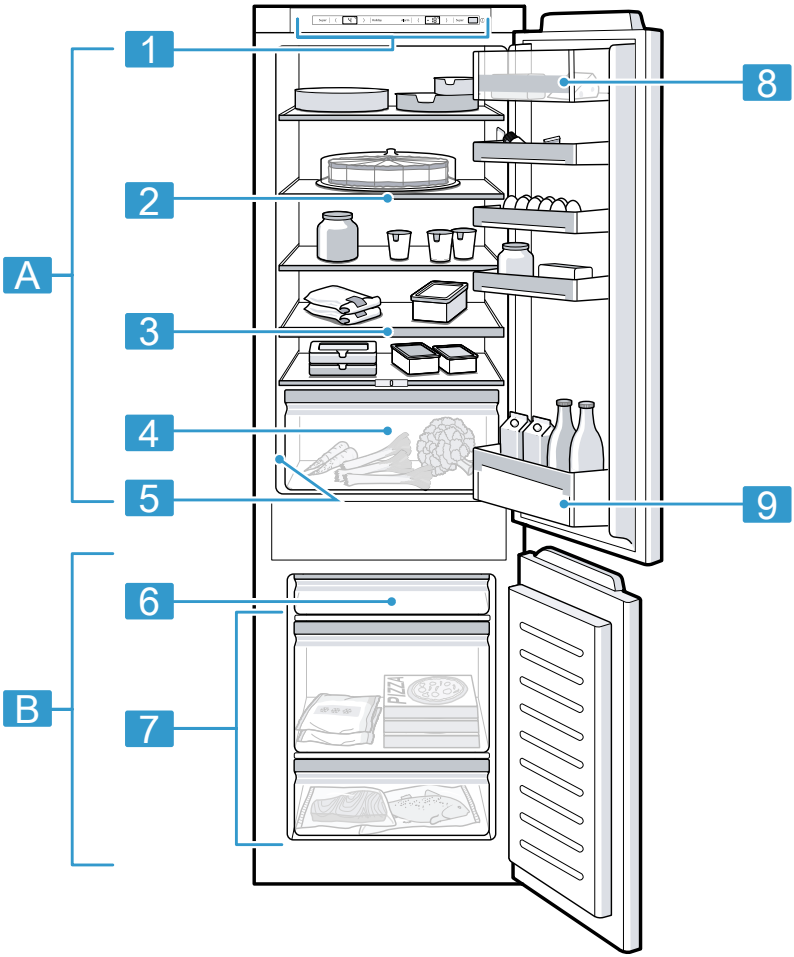

1

A	Refrigerator compartment → *Page 19*
B	Freezer compartment → *Page 20*

1	Control panel → *Page 13*
2	Variable shelf → *Page 14*
3	Extendable shelf → *Page 14*

4	Fruit and vegetable container with humidity control → *Page 14*
5	Rating plate → *Page 29*
6	Flat frozen food container → *Page 15*
7	Frozen food container → *Page 24*
8	Butter and cheese compartment → *Page 15*
9	Door storage compartment for large bottles → *Page 15*

Note: Deviations between your appliance and the diagrams may differ with regard to their features and size.

5.2 Control panel

You can use the control panel to configure all functions of your appliance and to obtain information about the operating status.

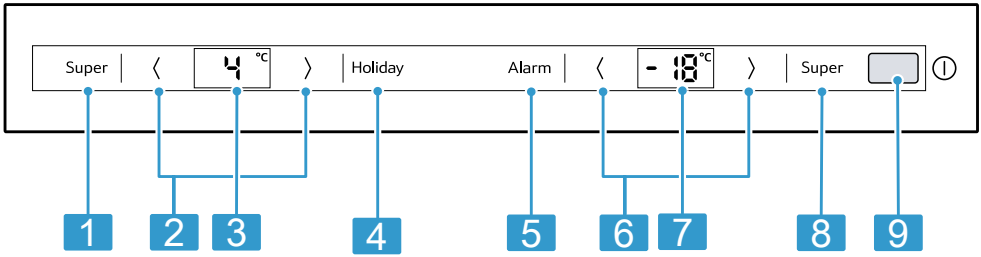

2

1	Super (Refrigerator compartment) switches Super cooling on or off.
2	〈/〉 (Refrigerator compartment) sets the temperature of the refrigerator compartment.
3	Displays the set temperature for the refrigerator compartment in °C.
4	Holiday switches holiday mode on or off.
5	Alarm switches the warning signal off.
6	〈/〉 (Freezer compartment) sets the temperature of the freezer compartment.
7	Displays the set temperature for the freezer compartment in °C.
8	Super (Freezer compartment) switches Super freezing on or off.
9	⏻ switches the appliance on or off.

6 Features

The features of your appliance depend on the model.

6.1 Shelf

To vary the shelf as required, you can remove the shelf and re-insert it elsewhere.
→ *"Removing the shelf", Page 23*

6.2 Variable shelf

Use the variable shelf to store tall items, e.g. cans or bottles, on the shelf below.
You can remove the front section of the variable shelf and slide it below the rear part of the shelf.

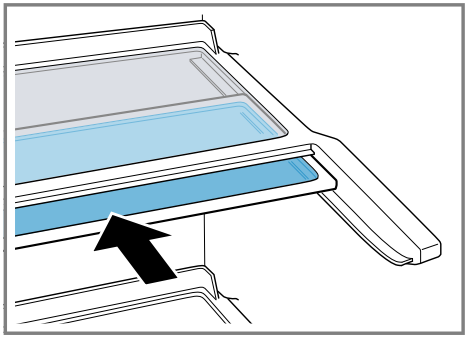

6.3 Extendable shelf

In order to achieve an improved overview and to remove food more quickly, pull out the extendable shelf.

6.4 Fruit and vegetable container with humidity control

Store fresh fruit and vegetables loose in the fruit and vegetable container. Cover any chopped fruit and vegetables, or store in air-tight packaging.

You can adjust the humidity in the fruit and vegetable container using the humidity controller and a special seal. This allows fresh fruit and vegetables to be stored for up to twice as long as with conventional storage.

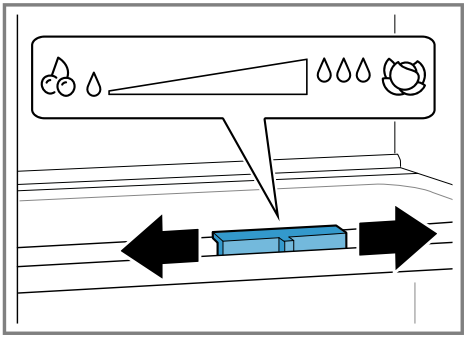

The air humidity in the fruit and vegetable container can be set according to the type and amount of food to be stored by moving the humidity controller:

- Low humidity required when primarily storing fruit or mixed items, or if the appliance is very full.
- High humidity required when primarily storing vegetables or when the appliance is not very full.

Condensation may form in the fruit and vegetable container depending on the food and quantity stored. Remove the condensation with a dry cloth and adjust the air humidity in the vegetable container using the humidity controller.
To ensure that the quality and aroma are retained, store fruit and vegetables that are sensitive to cold outside of the appliance at temperatures of approx. 8 °C to 12 °C, e.g. pineapple, bananas, citrus fruits, cucumbers, courgettes, peppers, tomatoes and potatoes.

6.5 Flat frozen food container

Store flat frozen items, the ice storage container and the ice scoop in the flat frozen food container.

6.6 Butter and cheese compartment

Store butter and hard cheese in the butter and cheese compartment.
To open the butter and cheese compartment, press down lightly on the centre of the flap.

Note: The compartment opens downwards. The flap slides under the compartment.

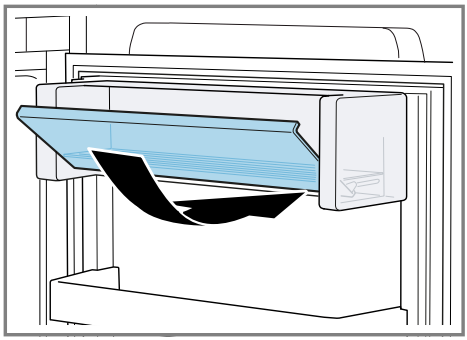

6.7 Door rack

To adjust the door racks as required, you can remove the door rack and re-insert elsewhere.
→ *"Removing door rack", Page 23*

6.8 Accessories

Use original accessories. These have been made especially for your appliance.
The accessories for your appliance depend on the model.

Egg tray

Store eggs safely on the egg tray.

Bottle holder

The bottle holder prevents bottles from falling over when the appliance door is opened and closed.

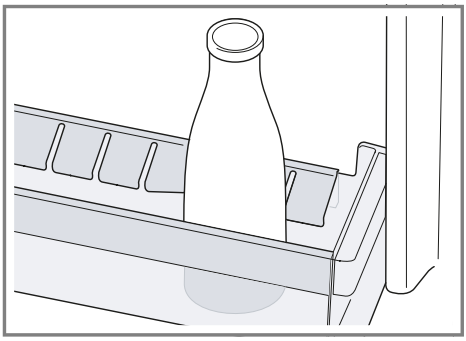

Freezer tray

You can freeze smaller quantities of food quickly in the freezer drawer, e.g. berries, pieces of fruit, herbs and vegetables.

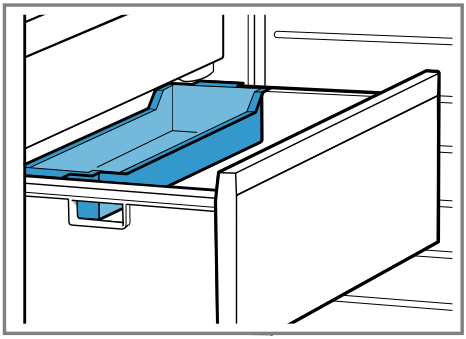

Distribute the frozen food evenly in the frozen food tray and allow to freeze for approx. 10 to 12 hours. Then place in a freezer bag or a freezer box.

Ice pack

Use the ice pack for temporarily keeping food cool, e.g. in a cool bag.

Tip: If a power failure or malfunction occurs, the ice pack can be used to slow down the thawing process for the stored frozen food.

Ice cube tray

Use the ice cube tray to make ice cubes.

Making ice cubes

Use only drinking water to make ice cubes.

1. Fill the ice cube tray with drinking water up to ¾ and place in the freezer compartment.

   If the ice cube tray is stuck to the freezer compartment, loosen it with a blunt implement only (e.g. spoon handle).
2. To loosen the ice cubes, twist the ice cube tray slightly or hold it briefly under flowing water.

7 Basic operation

7.1 Switching on the appliance

1. Press ⏻.
✔ The appliance begins to cool.
✔ A warning signal sounds, the temperature display (freezer compartment) flashes and Alarm lights up because the freezer compartment is still too warm.
2. Switch off the warning tone using Alarm.
✔ Alarm goes out as soon as the set temperature has been reached.
3. Set the required temperature.
→ *Page 16*

7.2 Operating tips

- Once you have switched on the appliance, the set temperature is only reached after several hours. Do not put any food in the appliance until the set temperature has been reached.
- The housing around the freezer compartment is temporarily heated slightly. This prevents condensation in the area of the door seal.
- When you close the door, a vacuum may be created. The door is then difficult to open again. Wait a moment until the vacuum is offset.

7.3 Switching off the appliance

▸ Press ⏻.

7.4 Setting the temperature

Setting the refrigerator compartment temperature

▸ Press 〈/〉 (Refrigerator compartment) repeatedly until the temperature display (refrigerator compartment) shows the required temperature.

The recommended temperature in the refrigerator compartment is 4 °C.
→ *""OK" sticker", Page 19*

Setting the freezer compartment temperature

▸ Press 〈/〉 (Freezer compartment) repeatedly until the temperature display (freezer compartment) shows the required temperature.

The recommended temperature in the freezer compartment is −18 °C.

8 Additional functions

8.1 Super cooling

With Super cooling, the refrigerator compartment cools as cold as possible.
Switch on Super cooling before placing large quantities of food.

Note: When Super cooling is switched on, increased noise may occur.

Switching on Super cooling

- ▸ Press Super (Refrigerator compartment).
- ✔ Super (Refrigerator compartment) lights up.

Note: After approx. 15 hours, the appliance switches to normal operation.

Switching off Super cooling

- ▸ Press Super (Refrigerator compartment).
- ✔ The previously set temperature is displayed.

8.2 Automatic Super freezing

With automatic Super freezing, the freezer compartment cools down to a much lower temperature than in normal mode. This freezes food more quickly.
The automatic Super freezing switches on if you place fresh food in the frozen food tray that is attached to the rear of the large frozen food container or in the flat frozen food containers, starting from the right-hand side.
If the automatic Super freezing is switched on, Super (Freezer compartment) lights up and increased noises may occur.
After operation, the appliance switches from automatic Super freezing to normal operation.

Cancelling automatic Super freezing

- ▸ Press Super (Freezer compartment).
- ✔ The previously set temperature is displayed.

8.3 Manual Super freezing

With Super freezing, the freezer compartment cools as cold as possible.
Switch on Super freezing four to six hours before placing food weighing 2 kg or more into the freezer compartment.
In order to utilise the freezer capacity, use Super freezing.
→ *"Prerequisites for freezing capacity", Page 20*

Note: When Super freezing is switched on, increased noise may occur.

Switching on manual Super freezing

- ▸ Press Super (Freezer compartment).
- ✔ Super (Freezer compartment) lights up.

Note: After approx. 60 hours, the appliance switches to normal operation.

Switching off manual Super freezing

- ▸ Press Super (Freezer compartment).
- ✔ The previously set temperature is displayed.

8.4 Holiday mode

If you are going to be away for a long time, you can switch on energy-saving holiday mode on the appliance.

⚠ CAUTION
Risk of harm to health!
The refrigerator compartment heats up while the holiday mode is switched on. The increased temperature may cause bacteria to increase and spoil the food.
- ▸ When the holiday mode is switched on, do not store any food in the refrigerator compartment.

The appliance automatically sets the temperatures.

Refrigerator compartment	14 °C
Freezer compartment	Temperature remains unchanged

Switching on holiday mode

- ▸ Press Holiday.
- ✔ Holiday lights up.
- ✔ No temperature is shown in the temperature display (refrigerator compartment).

Switching off holiday mode

- ▸ Press Holiday.
- ✔ The previously set temperature is displayed.

9 Alarm

9.1 Door alarm

If the appliance door is open for a while, the door alarm switches on. A warning tone sounds.

Switching off the door alarm

- ▸ Close the appliance door or press Alarm.
- ✔ The warning tone is switched off.

9.2 Temperature alarm

If the freezer compartment becomes too warm, the temperature alarm is switched on.
A warning tone sounds and Alarm lights up.

⚠ CAUTION
Risk of harm to health!
During the thawing process, bacteria may multiply and spoil the frozen food.
- ▸ Do not refreeze food after it has been defrosted or started to defrost.
- ▸ Refreeze food only after cooking.
- ▸ These items should no longer be stored for the maximum storage period.

The temperature alarm can be switched on in the following cases:
- ■ The appliance is switched on. Do not store any food until the appliance has reached the set temperature.
- ■ Large quantities of fresh food are being placed inside. Switch on Super freezing before placing large quantities of food in the appliance.
- ■ The freezer compartment door is open for too long. Check whether the frozen food has defrosted or thawed.

Switching off the temperature alarm

- ▸ Press Alarm.
- ✔ The warning tone is switched off.

- ✔ The temperature display (freezer compartment) briefly indicates the warmest temperature reached in the freezer compartment. The temperature display (freezer compartment) then indicates the set temperature again.
- ✔ From this time on, the warmest temperature is measured again and saved.
- ✔ Alarm lights up until the set temperature is reached again.

10 Refrigerator compartment

You can keep meat, sausage, fish, dairy products, eggs, prepared meals and pastries in the refrigerator compartment.
The temperature can be set from 2 °C to 8 °C.
The refrigerator compartment can also be used to store highly perishable foods in the short to medium term. The lower the selected temperature, the longer the food remains fresh.

10.1 Tips for storing food in the refrigerator compartment

- Only store food when fresh and undamaged.
- Store food covered or in air-tight packaging.
- To avoid impeding the circulation of air and to prevent food from freezing, do not place food directly against the back wall.
- Allow hot food and drinks to cool down first before placing in the appliance.
- Observe the best-before date or use-by date specified by the manufacturer.

10.2 Chill zones in the refrigerator compartment

The air circulation in the refrigerator compartment creates different chill zones.

Coldest zone

The coldest zone is between the arrow stamped on the side and the shelf underneath.

Tip: Store highly perishable food such as fish, sausages and meat in the coldest zone.

Warmest zone

The warmest zone is at the very top of the door.

Tip: Store food that does not spoil easily in the warmest zone, e.g. hard cheese and butter. Cheese can then continue to release its aroma and the butter will still be easy to spread.

10.3 "OK" sticker

The "OK" sticker lets you check whether the refrigerator compartment reaches the safe temperature ranges of +4 °C or colder recommended for food.
The "OK" sticker is not included with all models.
If the sticker does not indicate "OK", gradually reduce the temperature.
→ *"Setting the refrigerator compartment temperature", Page 16*
Once the appliance is switched on, it may take up to 12 hours until the set temperature is reached.



Correct setting

11 Freezer compartment

You can store frozen food, freeze food and make ice cubes in the freezer compartment.
The temperature can be set from −16 °C to −24 °C.
Long-term storage of food should be at −18 °C or lower.
The freezer compartment can be used to store perishable food long-term. The low temperatures slow down or stop the spoilage.

11.1 Freezing capacity

The freezing capacity indicates the quantity of food that can be frozen right through to the centre within a specific period of time.
Information on freezing capacity can be found on the rating plate. → *"Appliance", Fig.* **1**/5, *Page 13*

Prerequisites for freezing capacity

1. Approx. 24 hours before placing fresh food in the appliance, switch on Super freezing.
   → *"Switching on manual Super freezing", Page 17*
2. If the appliance has a flat frozen food container, fill this with food first. For appliances without a flat frozen food container, fill the lowest frozen food container with food first.
3. Freeze fresh food as close as possible to the side panels.

11.2 Fully utilising the freezer compartment volume

Learn how to store the maximum amount of frozen food in the freezer compartment.

1. Remove all fittings from the freezer compartment. → *Page 23*
2. Store food directly on the shelves and on the floor of the freezer compartment.

11.3 Tips for storing food in the freezer compartment

- Store food in air-tight packaging.
- Do not bring food which is to be frozen into contact with frozen food.
- Place the food over the whole area of the frozen food containers.
- To quickly and gently freeze larger quantities of fresh food, place this in the top frozen food container.
- To ensure that the air can circulate freely in the appliance, push the frozen food containers in as far as they will go.

11.4 Tips for freezing fresh food

- Freeze fresh and undamaged food only.
- Freeze food in portions.
- Cooked food is more suitable than food that can be eaten raw.
- Vegetables: Wash, chop up and blanch before freezing.
- Fruit: Wash, pit and perhaps peel, possibly add sugar or ascorbic acid solution.
- Food that is suitable for freezing includes baked items, fish and seafood, meat, game, poultry, eggs without shells, cheese, butter and quark, ready meals and leftovers.
- Food that is unsuitable for freezing includes lettuce, radishes, eggs in shells, grapes, raw apples and pears, yoghurt, sour cream, crème fraîche and mayonnaise.

Packing frozen food

If you select suitable packaging material and the correct type of packaging, you can determine the product quality and prevent freezer burn.

1. Place the food in the packaging.
2. Squeeze out the air.
3. Pack food airtight to prevent it from losing flavour and drying out.
4. Label the packaging with the contents and the date of freezing.

11.5 Shelf life of frozen food at –18 °C

Food	Storage time
Fish, sausages, prepared meals and baked goods	up to 6 months
Poultry, meat	up to 8 months
Vegetables, fruit	up to 12 months

The imprinted freezer calendar indicates the maximum storage duration in months at a constant temperature of –18 °C.

11.6 Defrosting methods for frozen food

⚠ CAUTION
Risk of harm to health!
During the thawing process, bacteria may multiply and spoil the frozen food.

- ▸ Do not refreeze food after it has been defrosted or started to defrost.
- ▸ Refreeze food only after cooking.
- ▸ These items should no longer be stored for the maximum storage period.

- Defrost animal-based food, such as fish, meat, cheese, quark, in the refrigerator compartment.
- Defrost bread at room temperature.
- Prepare food for immediate consumption in the microwave, in the oven or on the hob.

12 Defrosting

12.1 Defrosting in the refrigerator compartment

When the appliance is operating, condensation droplets or frost form on the rear panel of the refrigerator compartment due to functional reasons. The back panel in the refrigerator compartment defrosts automatically.
Condensation runs through the condensation channel into the drainage hole to the evaporation pan and does not have to be wiped away.
To ensure that the condensation can drain and odours do not form, observe the following information:
→ *"Cleaning the condensation channel and drainage hole", Page 23*.

12.2 Defrosting in the freezer compartment

The fully automatic NoFrost system ensures that the freezer compartment remains frost-free. Defrosting is not required.

13 Cleaning and servicing

To keep your appliance working efficiently for a long time, it is important to clean and maintain it carefully. Customer Service must clean inaccessible points. Cleaning by customer service can give rise to costs.

13.1 Preparing the appliance for cleaning

1. Switch off the appliance.
   → *Page 16*
2. Disconnect the appliance from the power supply.

   Unplug the appliance from the mains or switch off the circuit breaker in the fuse box.
3. Take out all of the food and store it in a cool place.

   Place ice packs (if available) onto the food.
4. Remove all fittings and accessories from the appliance.
   → *Page 23*
5. Remove the shelf above the fruit and vegetable container.
   → *Page 24*

13.2 Cleaning the appliance

⚠ WARNING
Risk of electric shock!
An ingress of moisture can cause an electric shock.
- ▸ Do not use steam- or high-pressure cleaners to clean the appliance.

Liquid in the lighting or in the controls can be dangerous.
- ▸ The rinsing water must not drip into the lighting or controls.

ATTENTION!
Unsuitable cleaning products may damage the surfaces of the appliance.
- ▸ Do not use hard scouring pads or cleaning sponges.
- ▸ Do not use harsh or abrasive detergents.
- ▸ Do not use cleaning products with a high alcohol content.

If liquid gets into the drainage hole, the evaporation pan may overflow.
- ▸ The rinsing water must not get into the drainage hole.

If you clean fittings and accessories in the dishwasher, this may cause them to become deformed or discolour.
- ▸ Never clean fittings and accessory in the dishwasher.

1. Prepare the appliance for cleaning.
   → *Page 22*
2. Clean the appliance, the fittings, the accessories and the door seals with a dish cloth, lukewarm water and a little pH-neutral washing-up liquid.
3. Dry thoroughly with a soft, dry cloth.
4. Insert the fittings and install the appliance components.
5. Electrically connect the appliance.
   → *Page 11*

6. Switch on the appliance.
   → *Page 16*
7. Putting the food into the appliance.

13.3 Cleaning the condensation channel and drainage hole

Regularly clean the condensation channel and drainage hole to ensure that the condensation can drain.

▸ Carefully clean the condensation channel and the drainage hole, e.g. using a moistened cotton bud.

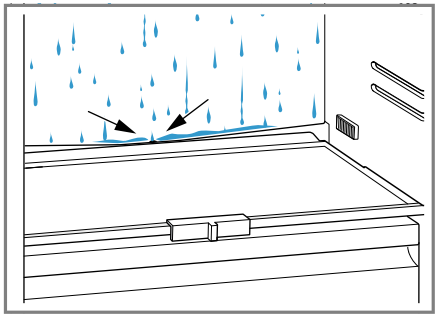

13.4 Removing the fittings

If you want to clean the fittings thoroughly, remove these from your appliance.

Removing the shelf

▸ Pull out and remove the shelf.

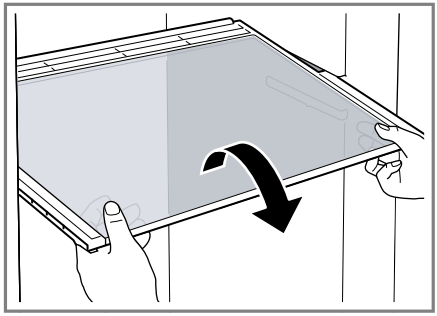

Removing the extendable shelf

1. Firmly pull out the extendable shelf until the locking catch is released.

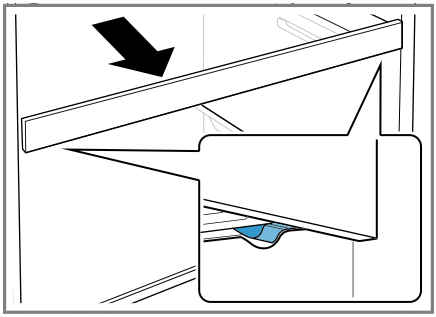

2. Lower the shelf and swing it out to the side.

Removing door rack

▸ Lift the door rack and remove it.

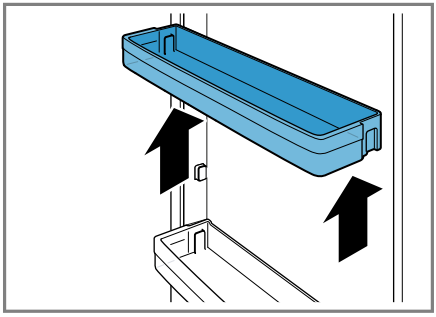

Removing the fruit and vegetable container

1. Pull out the fruit and vegetable container as far as it will go.

2. Lift the fruit and vegetable container at the front ① and remove it ②.

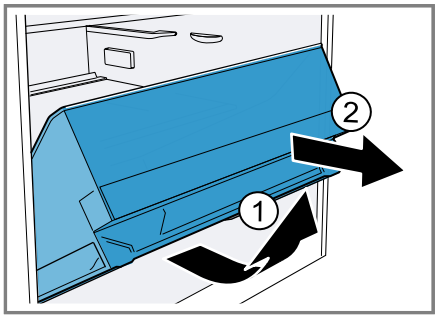

Removing the frozen food container

1. Take out the frozen food container as far as it will go.
2. Lift the frozen food container at the front ① and remove it ②.

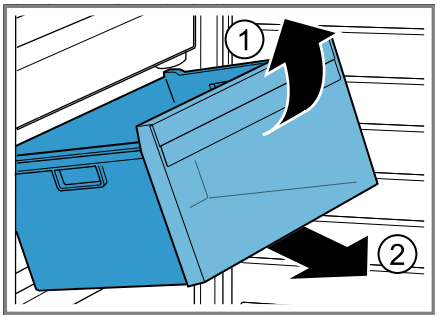

13.5 Removing appliance components

If you want to clean your appliance thoroughly, you can remove certain components from your appliance.

Removing the shelf above the fruit and vegetable container

1. Pull out the fruit and vegetable container.
2. Remove the shelf ① and rotate it ②.

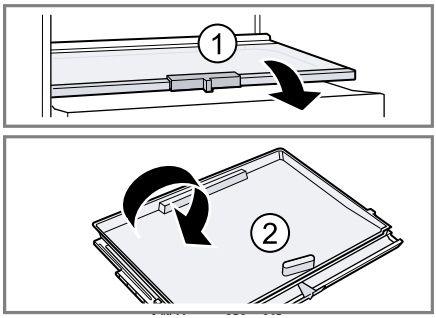

3. Press the fastenings for the lower cover outwards.

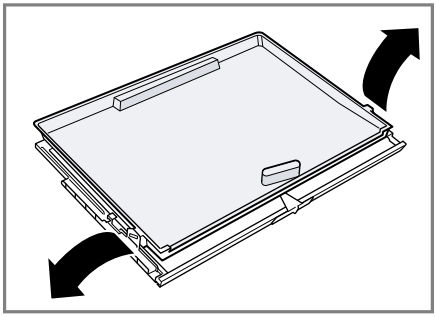

4. Lift the cover at the front ① and pull it out at the rear ②.

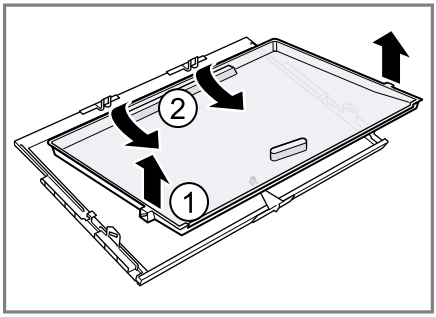

14 Troubleshooting

You can rectify minor faults on your appliance yourself. Read the troubleshooting information before contacting after-sales service. This will avoid unnecessary costs.

⚠ WARNING
Risk of electric shock!
Incorrect repairs are dangerous.
- ▸ Repairs to the appliance should only be carried out by trained specialist staff.
- ▸ Only use genuine spare parts when repairing the appliance.
- ▸ If the power cord of this appliance is damaged, it must be replaced by the manufacturer, the manufacturer's Customer Service or a similarly qualified person in order to prevent any risk.

Fault	Cause and troubleshooting
The appliance is not cooling, the displays and lighting are lit.	Showroom mode is switched on. ▸ Carry out the appliance self-test. → *Page 28* ✔ Once the appliance self-test has ended, the appliance switches to normal operation.
The LED lighting does not work.	Different causes are possible. ▸ Call customer service. The customer service number can be found in the enclosed customer service directory.
E or d appears in the temperature display.	The electronics have detected a fault. 1. Switch off the appliance. → *Page 16* 2. Disconnect the appliance from the mains. Unplug the appliance from the mains or switch off the circuit breaker in the fuse box. 3. Reconnect the appliance after five minutes. 4. If the message still appears on the display, call customer service. The customer service number can be found in the enclosed customer service directory.

Fault	Cause and troubleshooting
The temperature display (freezer compartment) flashes.	The temperature in the freezer compartment was too warm. **1.** Press Alarm. ✔ The temperature display (freezer compartment) briefly indicates the warmest temperature reached in the freezer compartment. The temperature display (freezer compartment) then indicates the set temperature again. **2.** Press Alarm. ✔ The temperature display (freezer compartment) no longer flashes.
A warning tone sounds, the temperature display (freezer compartment) flashes and Alarm lights up.	Different causes are possible. ▸ Press Alarm. ✔ The alarm is switched off.
	The appliance door is open. ▸ Close the appliance door.
	External ventilation openings are covered up. ▸ Remove any obstructions from in front of the external ventilation openings.
	Larger quantities of fresh food have been put in. ▸ Do not exceed the max. freezing capacity. → *"Freezing capacity", Page 20*
The temperature differs greatly from the setting.	Different causes are possible. **1.** Switch off the appliance. → *Page 16* **2.** Switch the appliance back on after five minutes. → *Page 16* – If the temperature is too warm, check the temperature again after a couple of hours. – If the temperature is too cold, check the temperature again on the following day.
The base of the refrigerator compartment is wet.	The condensation channel or drainage hole are blocked. ▸ Clean the condensation channel and the drainage hole. → *Page 23*
The appliance hums, bubbles, buzzes, gargles, clicks or crackles.	Not a fault. A motor is running, e.g. refrigerating unit, fan. Refrigerant flows through the pipes. The motor, switches or solenoid valves are switching on or off. Automatic defrosting is running. No action required.

Fault	Cause and troubleshooting
The appliance makes noises.	Fittings wobble or stick. ▸ Check the removable fittings and, if required, replace these.
	Bottles or containers are touching. ▸ Move the bottles or containers away from each other.
	Super freezing is switched on. No action required.

14.1 Power failure

During a power failure, the temperature in the appliance rises; this reduces the storage time and the quality of the frozen food.
On the website for your appliance, the technical data provides you with the storage times for frozen food in the event of a fault.

Notes
- Open the appliance as little as possible during a power failure and do not place any other food in the appliance.
- Check the quality of the food immediately after a power failure.
  – Dispose of any frozen food that has defrosted and is hotter than 5 °C.
  – Cook or fry slightly thawed frozen food, and then either consume it or freeze it again.

14.2 Conducting an appliance self-test

1. Switch off the appliance. → *Page 16*
2. Switch the appliance back on after approx. five minutes. → *Page 16*
3. Within the first 10 seconds after switching on, press and hold Super (Freezer compartment) for 3 to 5 seconds until an audible signal sounds.

✔ The appliance self-test starts.
✔ While the appliance self-test is running, a long audible signal sounds.
✔ If, at the end of the appliance self-test, two audible signals sound and the temperature display indicates the set temperature, your appliance is OK. The appliance switches to normal operation.
✔ If, at the end of the appliance self-test, five audible signals sound and Super (Freezer compartment) flashes for 10 seconds, inform the after-sales service.

15 Storage and disposal

You can find out here how to prepare your appliance for storage. You will also find out how to dispose of old appliances.

15.1 Taking the appliance out of operation

1. Switch off the appliance. → *Page 16*
2. Disconnect the appliance from the power supply.
   Unplug the appliance from the mains or switch off the circuit breaker in the fuse box.
3. Remove all of the food.
4. Clean the appliance. → *Page 22*
5. To guarantee the ventilation inside the appliance, leave the appliance open.

15.2 Disposing of old appliance

Valuable raw materials can be reused by recycling.

⚠ WARNING
Risk of harm to health!
Children can lock themselves in the appliance, thereby putting their lives at risk.
- ▸ Leave shelves and containers inside the appliance to prevent children from climbing in.
- ▸ Keep children away from the redundant appliance.

⚠ **WARNING**
Risk of fire!
If the tubes are damaged, flammable refrigerant and harmful gases may escape and ignite.
- ▸ Do not damage the tubes of the refrigerant circuit or the insulation.

1. Unplug the appliance from the mains.
2. Cut through the power cord.
3. Dispose of the appliance in an environmentally friendly manner.

   Information about current disposal methods are available from your specialist dealer or local authority.



This appliance is labelled in accordance with European Directive 2012/19/EU concerning used electrical and electronic appliances (waste electrical and electronic equipment - WEEE). The guideline determines the framework for the return and recycling of used appliances as applicable throughout the EU.

16 Customer Service

If you have any queries, are unable to rectify faults on the appliance yourself or if your appliance needs to be repaired, contact Customer Service. Function-relevant genuine spare parts according to the corresponding Ecodesign Order can be obtained from Customer Service for a period of at least 10 years from the date on which your appliance was placed on the market within the European Economic Area.

Note: Under the terms of the manufacturer's warranty applicable to the location, the use of Customer Service is free of charge. The minimum duration of the warranty (manufacturer's warranty for private consumers) in the European Economic Area is 2 years according to the terms of warranty applicable to the location. The terms of warranty do not affect other rights or claims held by yourself under local legislation.

Detailed information on the warranty period and terms of warranty in your country is available from our aftersales service, your retailer or on our website.
If you contact Customer Service, you will require the product number (E-Nr.) and the production number (FD) of your appliance.
The contact details for Customer Service can be found in the enclosed Customer Service directory or on our website.

16.1 Product number (E-Nr.) and production number (FD)

You can find the product number (E-Nr.) and the production number (FD) on the appliance's rating plate.
→ *"Appliance", Fig.* **1**/5, *Page 13*
Make a note of your appliance's details and the Customer Service telephone number to find them again quickly.

17 Technical data

Refrigerant, cubic capacity and further technical specifications can be found on the rating plate.
→ *"Appliance", Fig.* **1**/5, *Page 13*

This product contains a light source from energy efficiency class F. The light source is available as a spare part and should only be replaced by trained specialist staff.
You can find more information about your model online at https://eprel.ec.europa.eu/[1]. This web address is linked to the official EU EPREL product database. Please then follow the instructions on searching for the model. The model identifier is made up of the characters before the slash in the product number (E-Nr.) on the rating plate. Alternatively, you can also find the model identifier in the first line of the EU energy label.

[1] Only applies to countries in the European Economic Area



REGISTER YOUR PRODUCT
ONLINE NEFF-HOME.COM

BSH Hausgeräte GmbH
Carl-Wery-Straße 34
81739 München, GERMANY

Valid within Great Britain:
Imported to Great Britain by
BSH Home Appliances Ltd.
Grand Union House
Old Wolverton Road
Wolverton, Milton Keynes
MK12 5PT
United Kingdom

9001727821
en
020228