USER GUIDE & SERVICE MANUAL



Model: UCRE518-SS33A

USER GUIDE & SERVICE MANUAL

Click on any section below to jump directly there

Table of Contents

Intro

Safety

- Safety and Warning
- Disposal And Recycling

Installation

- Environmental Requirements
- Electrical
- Cutout & Product Dimensions
- Anti-Tip Bracket
- General Installation
- Grille Installation
- Door Swing
- Door Stop
- Door Adjust
- Interior Adjustments

Maintenance

- Cleaning
- Cleaning Condenser
- Extended Non-Use

Operating Instructions

- First Use
- Control Operation
- Airflow and Product Loading

Service

- Troubleshooting
- Wire Diagram
- Product Liability
- Parts
- R600a Specifications
- System Diagnosis Guide
- Compressor Specifications
- Troubleshooting Extended
- Control Operation - Service
- Thermistor
- Defrost
- Remove Fan and Cover
- Warranty

WELCOME TO U-LINE

Congratulations on your U-Line purchase! Our products are focused on functionality, style, and inspired innovations — paying close attention to even the smallest details. Applications include residential, outdoor, ADA height compliant, marine, and commercial. Product categories include Beverage Centers, Wine Refrigerators, Ice Machines, Refrigerators, Freezers, and Dispensers. Our advanced refrigeration systems, large and flexible capacities, and clean integrated look are what makes our products Built-In to Stand Out®. Since 2014, U-Line has been part of the Middleby family of brands.

U-Line — RIGHT PRODUCT. RIGHT PLACE. RIGHT TEMPERATURE.®

PRODUCT INFORMATION

Looking for additional information on your product? User Guides, Spec Sheets, CAD Drawings, and Product Warranty information are available digitally on u-line.com.

PROPERTY DAMAGE / INJURY CONCERNS

In the unlikely event property damage or personal injury is suspected related to a U-Line product, please take the following steps:

1. U-Line Customer Care must be contacted immediately at +1.414.354.0300.
2. Service or repairs performed on the unit without prior written approval from U-Line is not permitted. If the unit has been altered or repaired in the field without prior written approval from U-Line, claims will not be eligible.

GENERAL INQUIRIES

U-Line Corporation
8900 N. 55th Street
Milwaukee, Wisconsin 53223 USA
Monday - Friday 8:00 am to 4:30 pm CST
T: +1.414.354.0300
Email: sales@u-line.com
u-line.com

SERVICE & PARTS ASSISTANCE

Monday - Friday 8:00 am to 4:30 pm CST
T: +1.414.354.0300
Service Email: onlineservice@u-line.com
Parts Email: onlineparts@u-line.com

CONNECT WITH US AT MIDDLEBY REFRIGERATION

Safety and Warning

NOTICE
Please read all instructions before installing, operating, or servicing the appliance.

Use this appliance for its intended purpose only and follow these general precautions with those listed throughout this guide:

SAFETY ALERT DEFINITIONS

Throughout this guide are safety items labeled with a Danger, Warning, or Caution based on the risk type:

⚠ DANGER

Danger means that failure to follow this safety statement will result in severe personal injury or death.

⚠ WARNING

Warning means that failure to follow this safety statement could result in serious personal injury or death.

⚠ CAUTION

Caution means that failure to follow this safety statement may result in minor or moderate personal injury, property, or equipment damage.

⚠ DANGER

This unit contains R600a (Isobutane) which is a flammable hydrocarbon. It is safe for regular use. Do not use sharp objects to expedite defrosting. Do not service without consulting the "R600a specifications" section included in the User Guide. Do not damage the refrigerant circuit.

⚠ DANGER

Service must be done by factory authorized service personnel. Any parts shall be replaced with like components. Failure to comply could increase the risk of possible ignition due to incorrect parts or improper service.

⚠ WARNING

CALIFORNIA PROPOSITION 65

This product contains chemicals known to the state of California to cause cancer and birth defects or other reproductive harm.

www.P65warnings.CA.gov

⚠ CAUTION

This equipment is to be installed with adequate backflow protection to comply with applicable federal, state and local codes.

⚠ CAUTION

This equipment is intended for the storage and display of packaged products only.

If this refrigerator has a glass door, it is a display refrigerator. Please see caution statement below:

⚠ CAUTION

This display refrigerator is not for the display of potentially hazardous foods.

Disposal and Recycling

⚠ DANGER

RISK OF CHILD ENTRAPMENT. Before you throw away your old refrigerator or freezer, take off the doors and leave shelves in place so children may not easily climb inside.

If the unit is being removed from service for disposal, check and obey all federal, state, and local regulations regarding the disposal and recycling of refrigeration appliances, and follow these steps completely:

1. Remove all consumable contents from the unit.

2. Unplug the electrical cord from its socket.

3. Remove the door(s)/drawer(s).

Environmental Requirements

This unit is designed to operate between 50°F (10°C) and 100°F (38°C). Higher ambient temperatures may reduce the unit's ability to reach low temperatures and/or reduce ice production on applicable models.

For best performance, keep the unit out of direct sunlight and away from heat generating equipment.

In climates where high humidity and dew points are present, condensation may appear on outside surfaces. This is considered normal. The condensation will evaporate when the humidity drops.

⚠ CAUTION

Damages caused by ambient temperatures of 40°F (4°C) or below are not covered by the warranty.

Electrical

⚠ WARNING

SHOCK HAZARD — Electrical Grounding Required. Never attempt to repair or perform maintenance on the unit until the electricity has been disconnected.

Never remove the round grounding prong from the plug and never use a two-prong grounding adapter.

Altering, cutting or removing power cord, removing power plug, or direct wiring can cause serious injury, fire, loss of property and/or life, and will void the warranty.

Never use an extension cord to connect power to the unit.

Always keep your working area dry.

NOTICE

Electrical installation must observe all state and local codes. This unit requires connection to a grounded (three-prong), polarized receptacle that has been placed by a qualified electrician.

The unit requires a grounded and polarized 115 VAC, 60 Hz, 15A power supply (normal household current). An individual, properly grounded branch circuit or circuit breaker is recommended. A GFCI (ground fault circuit interrupter) is usually not required for fixed location appliances and is not recommended for your unit because it could be prone to nuisance tripping. However, be sure to consult your local codes.

See CUTOUT & PRODUCT DIMENSIONS for recommended receptacle location.

Cutout & Product Dimensions

PREPARE SITE

Your U-Line product has been designed for either free-standing or built-in installation. When built-in, your unit does not require additional air space for top, sides, or rear. However, the front grille must NOT be obstructed, and clearance is required for an electrical connection in the rear.

⚠ CAUTION

Unit can NOT be installed behind a closed cabinet door.

CUTOUT DIMENSIONS

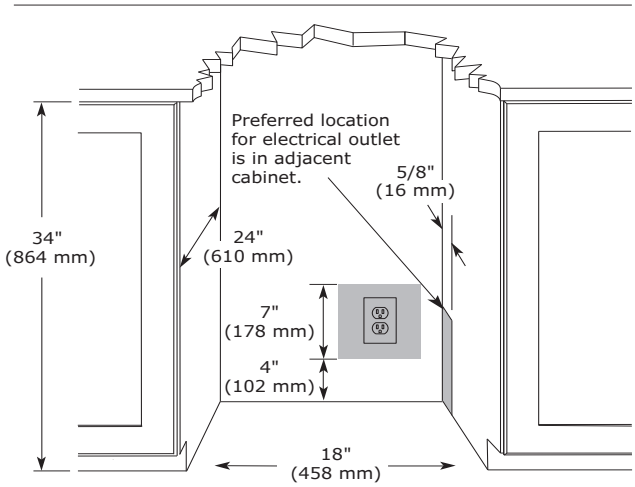

PRODUCT DIMENSIONS

REAR

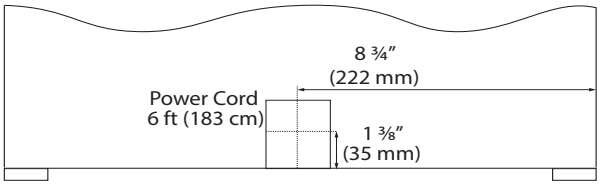

FRONT

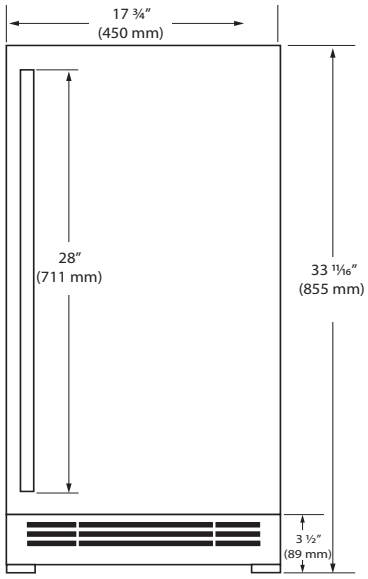

TOP

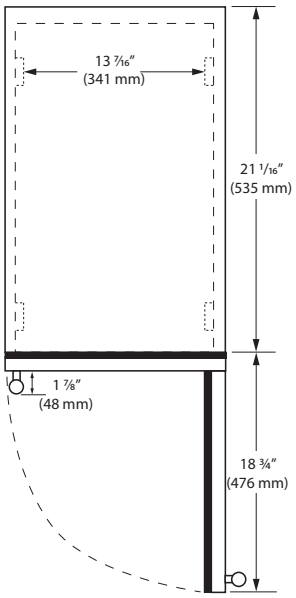

SIDE

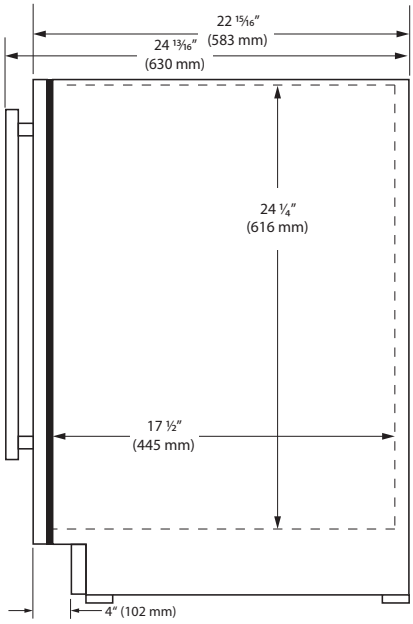

Anti-Tip Bracket

FLOOR MOUNTED ANTI-TIP INSTALLATION

1. Locate two anti-tip brackets included with the kit.

2. Place the unit into the area where it will be installed. Check the door, sides, and top for a proper fit. Also test to make sure the door opens and closes freely.

3. Remove grille and place a mark on the floor at the front of the unit. Also place a mark on the floor in the center of the unit.

4. Remove the unit. Using a square, extend center line "B" (see chart below). This line serves as the back edge for the anti-tip brackets. From the center line, measure "A" to the left and right. This line is the outer edge of each bracket.

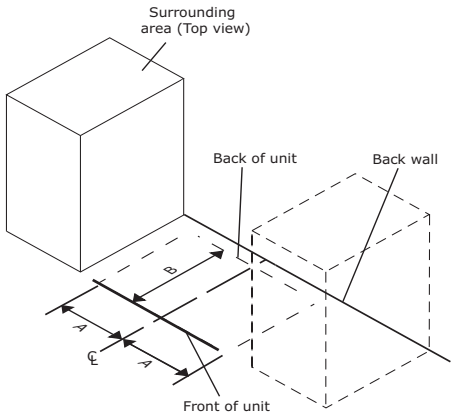

	515	518	524
A	7 5⁄8″	9″	11 15⁄16″
B	22″	22″	22″

5. Place the anti-tip brackets on the floor against the line drawn for the outer edge. Mark spots for the screw holes.

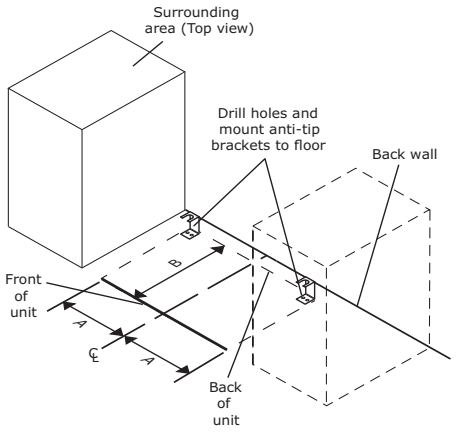

6. Use a 1/8″ drill to make two starter holes and fasten the anti-tip brackets to the floor using the screws provided.

7. Place the unit back into position, making sure the feet engage the anti-tip brackets properly. Check the alignment of the lines made on the floor in step 3 with the position of the front feet to ensure proper positioning.

General Installation

LEVELING INFORMATION

⚠ CAUTION

To comply with applicable federal, state and local codes, this equipment may need to be caulked to the floor.

1. Use a level to confirm the unit is level. Level should be placed along top edge and side edge as shown.

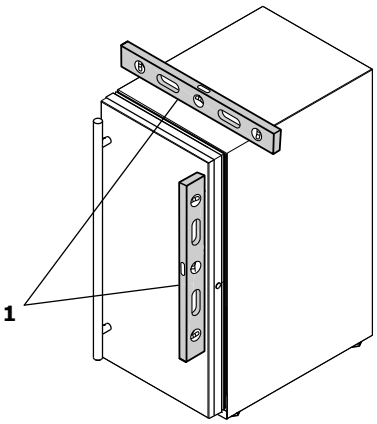

2. If the unit is not level, adjust the legs on the corners of the unit as necessary.

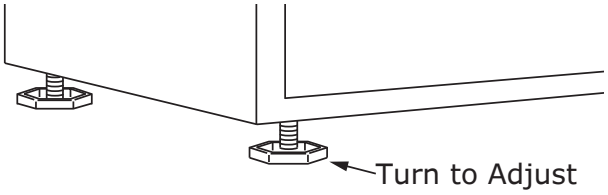

3. Confirm the unit is level after each adjustment and repeat the previous steps as needed.

INSTALLATION TIP

If the room floor is higher than the floor in the cutout opening, adjust the rear legs to achieve a total unit rear height of 1⁄8″ (3 mm) less than opening's rear height. Shorten the unit height in the front by adjusting the front legs. This allows the unit to be gently tipped into the opening. Readjust the front legs to level the unit after it is correctly positioned in the opening.

INSTALLATION

1. Plug in the power/electrical cord.
2. Gently push the unit into position. Be careful not to entangle the cord or water and drain lines, if applicable.
3. Re-check the leveling, from front to back and side to side. Make any necessary adjustments. The unit's top surface should be approximately 1⁄8″ (3 mm) below the countertop.
4. Install the anti-tip bracket.
5. Remove interior packing material and wipe out the inside of the unit with a clean, water-dampened cloth.

Grille Installation

REMOVING AND INSTALLING GRILLE

⚠ WARNING

Disconnect electric power to the unit before removing the grille.

When using the unit, the grille must be installed.

⚠ WARNING

DO NOT touch the condenser fins. The condenser fins are SHARP and can be easily damaged.

Removing the grille

1. Disconnect power to the unit.
2. Loosen the two screws (1).
3. Remove grille (2) from unit.

Installing the grille

1. Align cabinet and grille holes and secure, but do not over tighten grille screws (1).
2. Reconnect power to the unit.

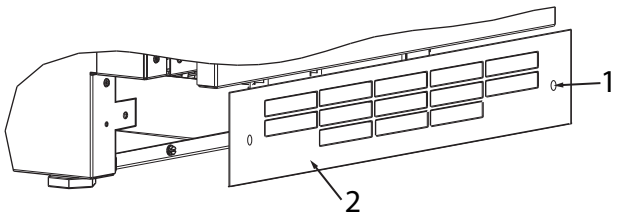

Door Swing

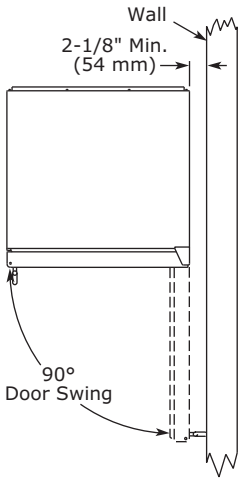

Units have a zero clearance for the door to open 90°, when installed adjacent to cabinets.

Stainless Steel models require 2-1/8" (54 mm) door clearance to accommodate the handle if installed next to a wall.

Door Stop

Your U-Line unit was shipped to you with the optional 90° pin.

Your unit's door(s) will open 115° straight from the factory. If you would like the door stop at 90°, follow these instructions.

NOTICE

If your unit is already undercounter, it will need to be moved out to access the hinge.

1. Open door approximately 90°.
2. Slide hinge pin into hole as shown. Pin should slide into place, stopping the door at 90°; if the pin does not go into the hole shown, hold the door less than 90° open and try again.
3. To fully seat the pin, tap it lightly with a hammer.
4. Carefully slide your unit back in place**.**

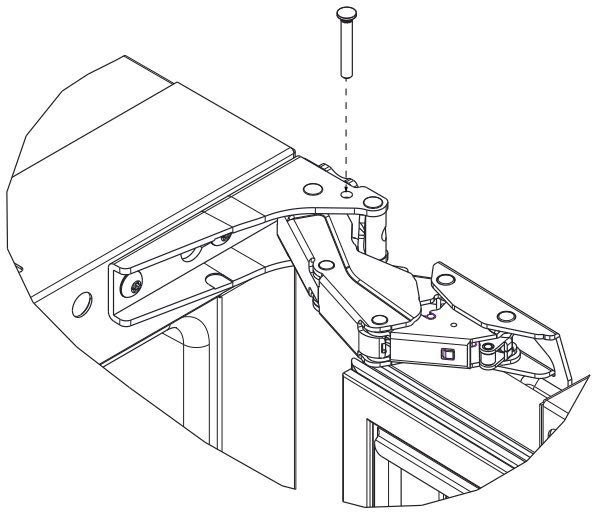

NOTICE

The pin can be removed to return the door swing back to its original 115° swing by tapping the pin out from the bottom of the hinge.

CLOSER

The door hinge has a self-closing feature that engages when the door is open approximately 6" (150 mm) (about 25°).

Door Adjustments

DOOR ALIGNMENT AND ADJUSTMENT

Align and adjust the door if it is not level or not sealing properly. If the door is not sealed, the unit may not cool properly, or excessive frost or condensation may form in the interior.

NOTICE

Properly aligned, the door's gasket should be firmly in contact with the cabinet all the way around the door (no gaps). Carefully examine the door's gasket to ensure that it is firmly in contact with the cabinet. Also make sure the door gasket is not pinched on the hinge side of the door.

⚠ CAUTION

Do not attempt to use the door to raise or pivot your unit. This would put excessive stress on the hinge system.

Alignment and Adjustment Procedure

1. On top and bottom sufaces of door, slightly loosen hinge bracket screws.

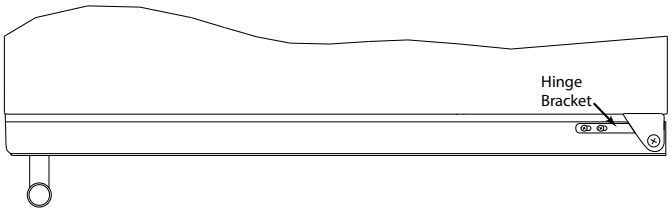

2. Square and align door as necessary.
3. Tighten Torx head screws on hinge.

TO REVERSE THE DOOR

1. Hold door to keep it from falling.
2. Remove top hinge pin.

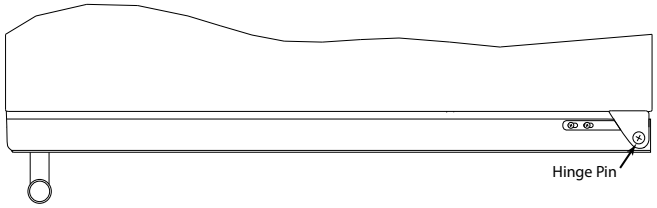

3. Remove door by tilting forward and lifting door off bottom hinge.
4. Remove both hinges and replace 6 screws in hinge holes.
5. Remove hinge pin from bottom hinge and install in left-hand bottom hinge.

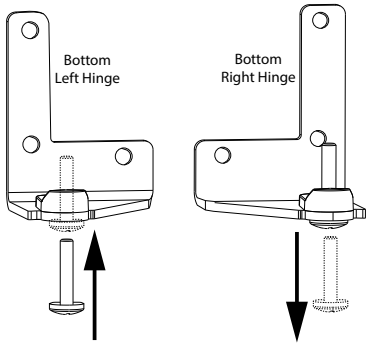

Install bottom hinge:

Install bottom hinge with 3 screws.

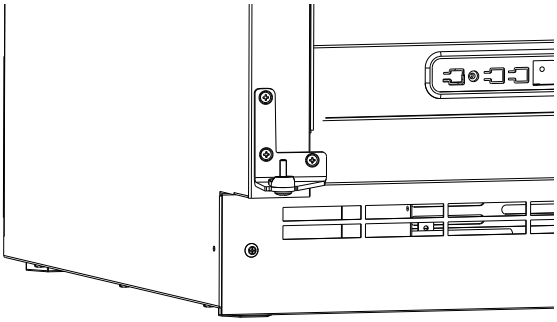

Install top hinge and door:

Install top hinge with 3 screws.

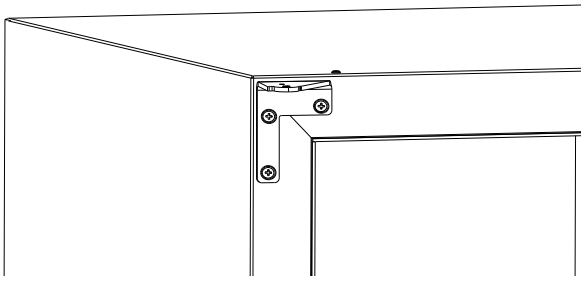

Install door:

1. Rotate door 180° and set on bottom hinge.
2. Align door with hinge and install hinge pin.

Align and adjust the door:

Align and adjust the door (see DOOR ALIGNMENT AND ADJUSTMENT)

First Use

Initial startup requires no adjustments. When plugged in, the unit will begin operating under the factory default settings. If the unit was turned off during installation, simply press ⏻ and the unit will immediately switch on. To turn the unit off, press ⏻.

NOTICE

Temperature displayed reflects actual temperature inside unit.

If the temperature displayed is different than selected, the unit is progressing towards the selected temperature. Time to reach set point varies based upon ambient temperature, temperature of product loaded, door openings, etc. U-Line recommends allowing the unit to reach set points before loading.

Control Operation

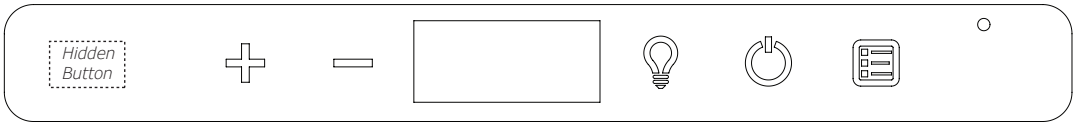

CONTROL FUNCTION GUIDE

FUNCTION	COMMAND	NOTES
ON/OFF	Press ⏻ and release	Unit will immediately turn On or OFF
Adjust Temperature	Press ✚ or ▬ and release	When the display is flashing, press ✚ or ▬ to adjust the set point temperature. Note: temperature displayed is the actual temperature inside unit
Toggle between °F / °C	Hold ✚ and ▬ for 5 seconds	The display will change units
Leave interior light on	Press 💡 and release to leave interior light on for 12 hours; press again to deactivate	After 12 hours, factory default is restored; light will turn on when door is open
Hide Display	Hold hidden button and press 💡	Display will turn off when door is closed. Unit will continue to operate. Repeat command to turn on display
Adjust light color	While holding ▬ press and release 💡 to scroll through lighting options	Option / Open Door / Closed Door 00 / White / White 01 / Blue / Blue 02 / White / Blue Light will be set at full intensity when door is open, and 50% intensity when door is closed.
Enable Sabbath Mode	Press and hold 💡 for 5 seconds and release	The °F / °C symbol will flash briefly after 5 seconds. Interior light and display will go dark and remain so until user resets mode - unit continues to operate
Disable Sabbath Mode	Press and hold 💡 for 5 seconds and release	Display and interior light return to normal operation
Showroom Mode	Hold 💡 and ⏻ for 5 seconds	The °F / °C symbol will flash. Display will be lit and interior light will function. Unit will not cool. Repeat command to return to normal operation

DOOR ALERT NOTIFICATION

When the door is left open for more than 5 minutes:

- A tone will sound for several seconds every minute
- dr will appear in display
- Closed door to silence alert and reset

Airflow and Product Loading

AIRFLOW

External

- Do not block the front grille - no additional clearance around sides, top or rear of unit is needed for ventilation
- Do not install behind a closed door

Internal

- When loading, leave space between internal fans, vents, and side walls to allow air to circulate freely

PRODUCT LOADING

Bottles and cans come in many shapes and sizes. Not all bottles and cans will fit on every shelf and wine rack. Larger diameter champagne and Magnum bottles only fit on wine racks when noted on the product specifications. When determining capacities U-Line uses typical 12 oz. cans, 12 oz. bottles, 750 mL white wine and red wine bottles shown below.

NOTICE

Restricting airflow may result in poor product performance, product failure, and uneven internal temperatures and may freeze contents.

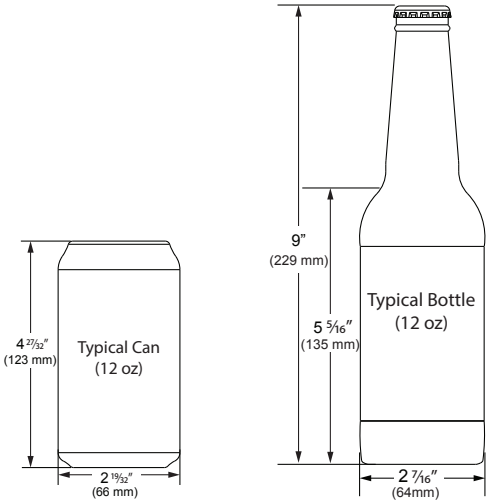

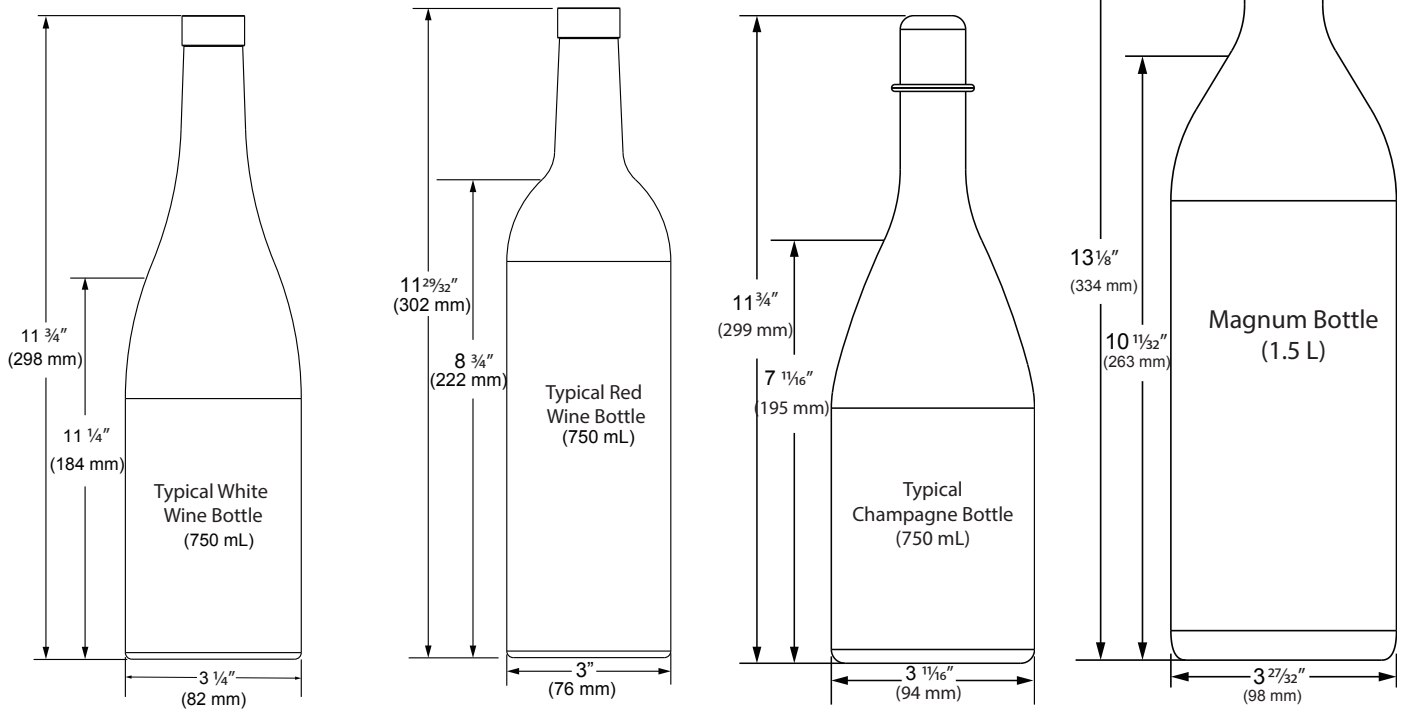

Interior Adjustments

Slide-out Metal Shelf Removal

All models feature side mounted rack supports with 19 adjustment positions.

All refrigerators ship with 2 slide-out metal shelves. Remove and reposition as desired.

Note: Do not exceed 52.8 lb (24 kg) per shelf when loading.

1. Remove all items from shelf.

2. Pull shelf out far enough to firmly grasp both sides. Lift front end slightly (about ¼") to center the pin in the slot.

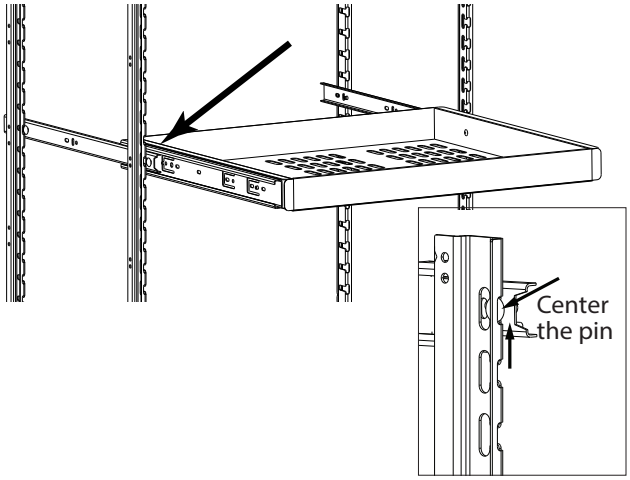

3. Pull shelf towards you until all pins are clear of the slots. If only repositioning the shelf, do not remove completely - go to "Stainless Steel Shelf Installation" Step 2.

4. Slightly tilt one side. Gently pull shelf towards you to remove from unit.

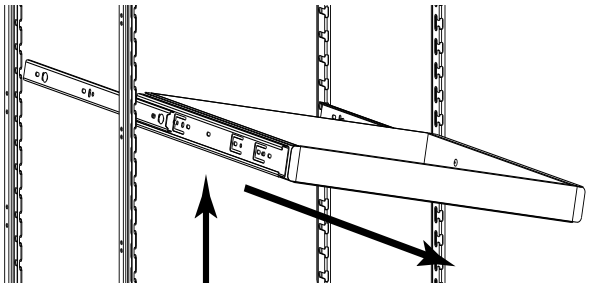

Note: Take care when removing shelf to avoid scratching interior of unit.

5. Once removed, retract the slides.

Note: The slides on the shelf have a thin coating which is used to block moisture and provide lubrication. Use care when handling.

Slide-out Metal Shelf Installation

1. Fully extend slides on both sides of shelf.

2. Insert shelf into unit with one side tilted slightly upward until back pin is between front and rear rail supports.

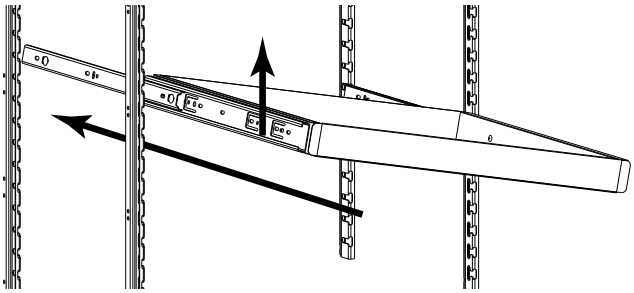

3. Tilt shelf back to horizontal and line up 2 back pins with rear rail support. Line up left side of shelf with rear and front rail support. Continue inserting shelf until both pins engage. The front will set down slightly and lock into place. Repeat on right side.

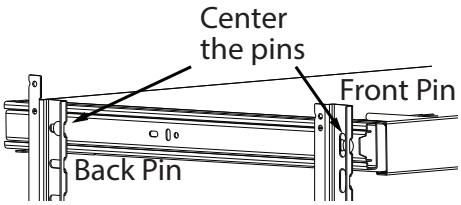

Cleaning

CLEANING VS. SANITIZING

This guide will address both the cleaning and the sanitizing of the unit.

Clean the unit to remove dried food and spills, to prevent build-up of grime, and to maintain the natural luster stainless steel surfaces.

Sanitize the unit when exposed to raw meat juice or human germs such as from a sneeze or being touched by someone who is ill. Sanitizing the unit can also be part of regular cleaning routine.

Stainless Surfaces

Stainless door panels, handles and frames can discolor when exposed to chlorine gas, pool chemicals, saltwater or cleaners with bleach.

Keep your stainless unit looking new by cleaning with a good quality all-in-one stainless steel cleaner and polish monthly. For best results use Claire® Stainless Steel Polish and Cleaner. Comparable products are acceptable. Frequent cleaning will remove surface contamination that could lead to rust. Some installations may require cleaning weekly.

Do not clean with steel wool pads.

Do not use stainless steel cleaners or polishes on any glass surfaces.

Clean any glass surfaces with a non-chlorine glass cleaner.

Do not use cleaners not specifically intended for stainless steel on stainless steel surfaces (this includes glass, tile, and counter cleaners).

If any surface discoloring or rusting appears, clean it quickly with Bon-Ami® or Barkeepers Friend Cleanser® and a nonabrasive cloth. Always clean with the grain. Always finish with Claire® Stainless Steel Polish and Cleaner or comparable product to prevent further problems.

Using abrasive pads such as ScotchBrite™ will cause the graining in the stainless steel to become blurred.

Rust not cleaned up promptly can penetrate the surface of the stainless steel and complete removal of the rust may not be possible.

CLEAN INTERIOR COMPONENTS

Use warm or hot water with dish soap to clean all removed components and interior surfaces. You may use a vinegar and water solution in place of soap. Proceed to sanitizing.

Note: Cleaning soaps and vinegar solutions are not sanitizers.

SANITIZE INTERIOR COMPONENTS AND SURFACES

Choose a Commercial Sanitizer Safe for Stainless Steel

- Read the directions for proper use to ensure that the surface will actually be sanitized
- Many products require rinsing with water after use, especially when food will be touching the surface
- Some products require a wait time before rinsing
- Verify the sanitizer you are using is safe for stainless steel.

Mix Your Own Sanitizer

Isopropyl Alcohol (rubbing alcohol)

1. Fill a clean, empty spray bottle with isopropyl alcohol
2. Spray surface
3. Wait 20 minutes
4. Dampen a non-abrasive cloth with isopropyl alcohol and wipe down surface
5. Dry surface with a clean dry non-abrasive cloth

Unscented Bleach and Water

1. Create a solution of 1 tablespoon of unscented bleach with one gallon of water.
2. Submerse small parts for no more than 3 minutes - rinse immediately and allow to air dry or dry with a disposable paper towel.
3. Fill a clean, empty spray bottle with bleach solution.
4. Spray surface.
5. After 2-3 minutes, use clean potable water to thoroughly rinse off surface. Allow to air dry or dry with a disposable paper towel.
6. Sanitize the door and all holes where the hinges attach to the unit and the brackets attach to the door as well as all the screws.

CLEAN EXTERIOR SURFACES

Use Bon-Ami® or Barkeepers Friend Cleanser® and a nonabrasive cloth. Always clean with the grain. Always finish with Claire® Stainless Steel Polish and Cleaner or comparable product to prevent further problems.

INTERIOR CLEANING & SANITIZING

NOTICE

Do not use any solvent-based or abrasive cleaners. These types of cleaners may transfer taste and/or odor to the interior products and damage or discolor the interior.

Remove Slide-out Metal Shelf

1. Remove all items from shelf.

2. Pull shelf out far enough to firmly grasp both sides. Lift front end slightly (about ¼") to center the pin in the slot.

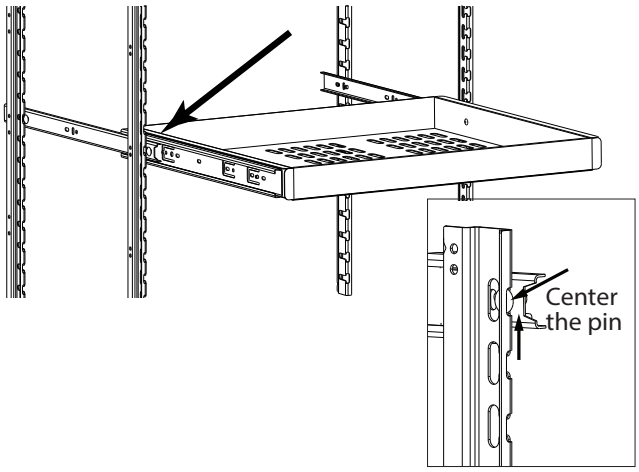

3. Pull shelf towards you until all pins are clear of the slots.

4. Slightly tilt one side. Gently pull shelf towards you to remove from unit.

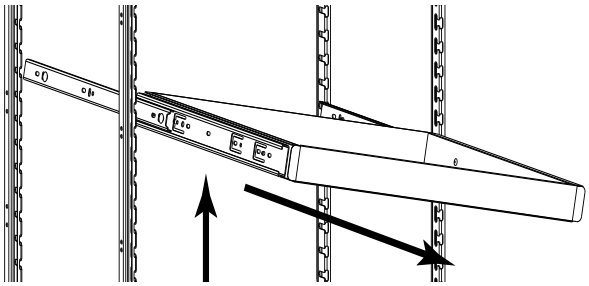

Note: Take care when removing shelf to avoid scratching interior of unit.

5. Once removed, retract the slides.*

6. Thoroughly clean and sanitize shelf and slides.

7. Re-install shelf by reversing above steps 1 - 4.

Remove Wine Rack

1. Fully extend empty rack

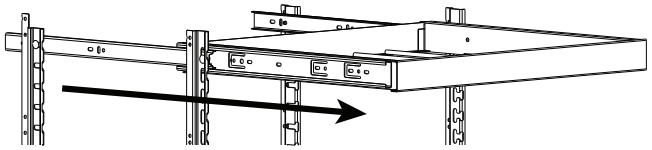

2. Firmly grasp both sides of rack and lift front end of rack slightly (about ¼") to center the pin in the slot.

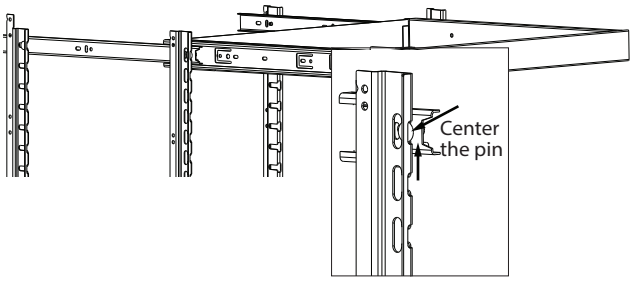

3. Pull rack towards you until all pins are clear of the slots. If only repositioning the rack, do not remove completely - go to "Rack Installation" Step 2.

4. Slightly tilt one side. Gently pull rack towards you to remove rack from unit.

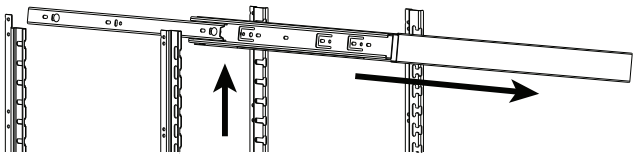

Note: Take care when removing rack to avoid scratching interior of unit.

5. Once removed, retract the slides.

6. Thoroughly clean and sanitize storage wine rack and slides.

7. Re-install storage bin and slides by reversing above steps 1 - 4.

*Note: The slides on the rack have a thin coating which is used to block moisture and provide lubrication. Use care when handling.

Evaporator Components and Rack Supports

1. Disconnect power to the unit.
2. Fully defrost unit (See DEFROSTING)

3. Remove evaporator cover.
   a. Remove thermistor cover - use a flat tool to pry out the push pin fastener
   b. Remove 8 screws (3 on each side 2 on top)

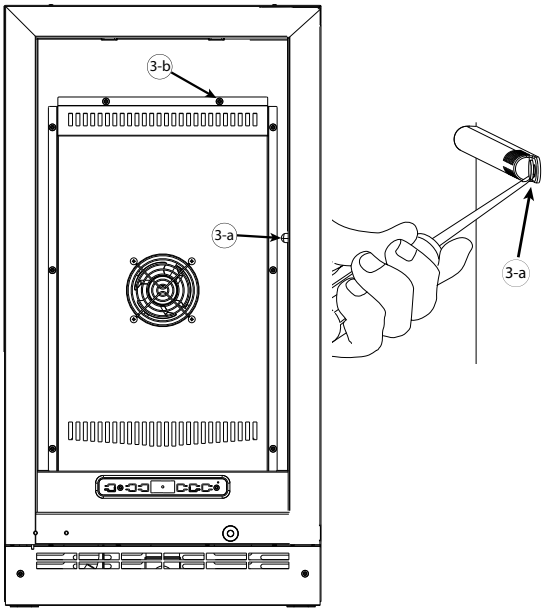

   c. Carefully pull evaporator cover out far enough to disconnect evaporator fan from behind cover
   d. Remove evaporator cover - take care to slide thermistor through notch in evaporator cover

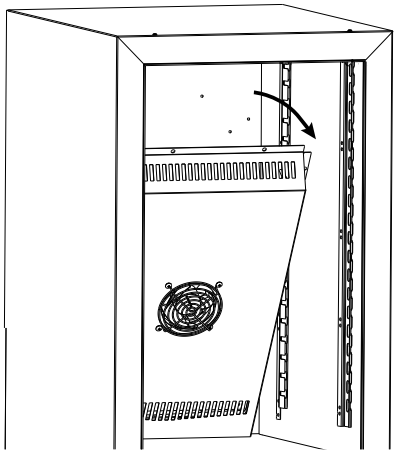

4. Remove evaporator fan assembly from evaporator cover.*

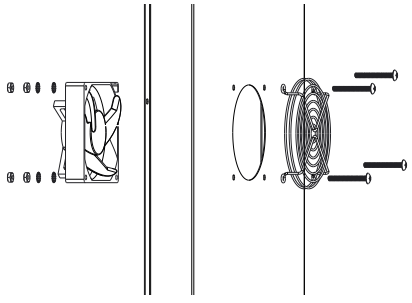

5. Remove 4 rack supports by removing 4 screws on each one.

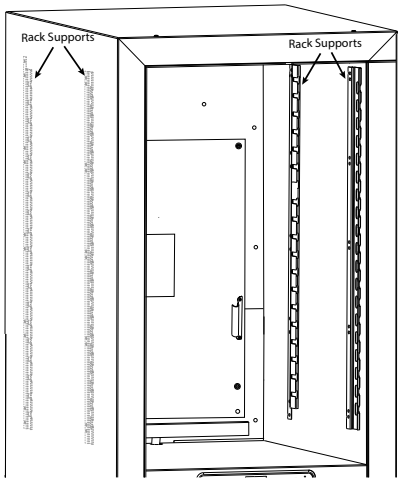

6. Remove screws and spacers from evaporator and carefully pull evaporator forward - just enough to be able to wipe both surfaces of the evaporator and the back wall.

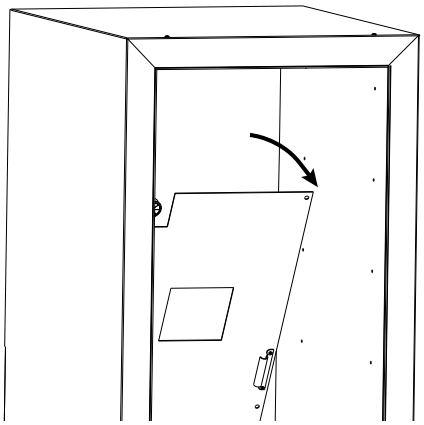

7. Thoroughly clean and sanitize all removed components including all hardware.

***Note: Carefully clean and sanitize the fan blades, but DO NOT submerse fan.**

8. Re-install all components by reversing above steps 1 - 6.

Remove LED Light Cover

1. With a flat screwdriver, carefully pry LED light cover from ceiling. LED light strip will hang down loosely.

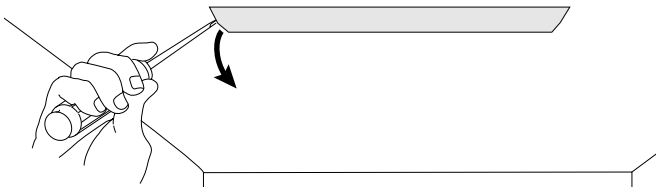

2. Thoroughly clean and sanitize LED light cover

Note: DO NOT clean the LED light strip.

Reinstall LED Light Cover

1. Insert LED light strip into center slots of light cover and hold in place.
2. Line up tabs on light cover with slots on ceiling light fixture.
3. Apply firm pressure evenly across the length of the cover until it snaps into place.

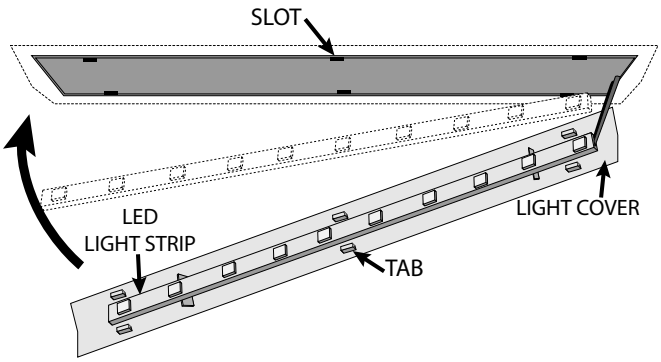

Remove Door, Brackets, and Hinge

1. Hold door to keep it from falling.
2. Remove top hinge pin.
3. Remove door by tilting forward and lifting door off bottom hinge.

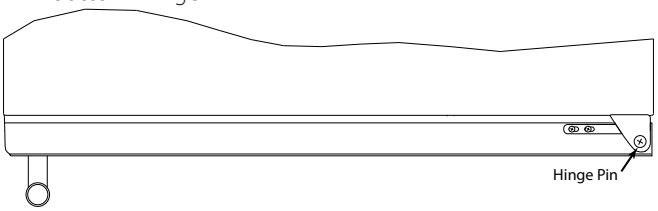

4. Take out screws and remove both hinges.

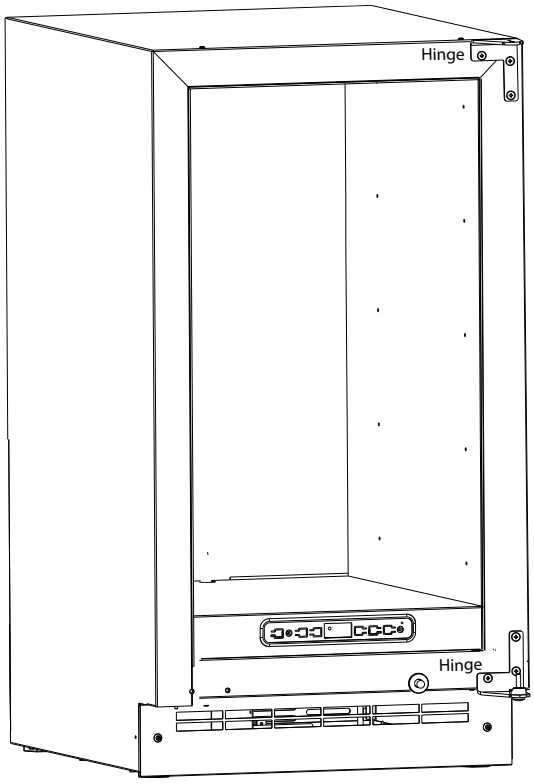

5. On the door, remove 2 screws and take off bracket. Repeat for bottom surface of door.

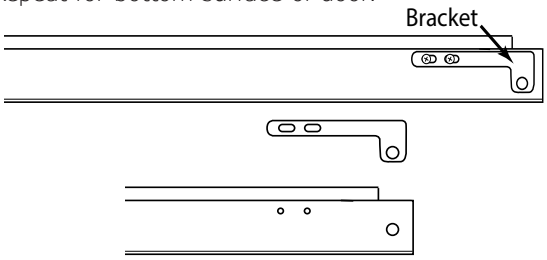

6. Thoroughly clean and sanitize all surfaces of the door, the brackets, hinges, and all hardware.
7. Reinstall hinges, door, and all hardware by reversing steps 1-5 above.

DEFROSTING

Under normal conditions this unit does not require manual defrosting. Minor frost on the rear wall or visible through the evaporator plate vents is normal and will melt during each cycle.

If there is excessive build-up of 1/4" (6 mm) or more, manually defrost the unit.

Ensure the door is closing and sealing properly.

High ambient temperature and excessive humidity can also produce frost.

⚠ CAUTION

DO NOT use an ice pick or other sharp instrument to help speed up defrosting. These instruments can puncture the inner lining or damage the cooling unit. DO NOT use any type of heater to defrost. Using a heater to speed up defrosting can cause personal injury and damage to the inner lining.

NOTICE

The drain pan was not designed to capture the water created when manually defrosting. To prevent water from overflowing the drain pan and possibly damaging water sensitive flooring, the unit must be removed from cabinetry.

To defrost:

1. Disconnect power to the unit.
2. Remove all products from the interior
3. Prop the door in an open position (2 in. [50 mm] minimum).
4. Allow the frost to melt naturally.
5. After the frost melts completely, clean the interior and all removed components. (See INTERIOR CLEANING).
6. When the interior is dry, reconnect power and turn unit on.

Cleaning Condenser

INTERVAL - EVERY SIX MONTHS

To maintain operational efficiency, keep the front grille free of dust and lint, and clean the condenser when necessary. Depending on environmental conditions, more or less frequent cleaning may be necessary.

⚠ WARNING

Disconnect electric power to the unit before cleaning the condenser.

NOTICE

DO NOT use any type of cleaner on the condenser unit. Condenser may be cleaned using a vacuum, soft brush, or compressed air.

1. Remove the grille. See GRILLE INSTALLATION).
2. Clean the condenser coil using a soft brush or vacuum cleaner.
3. Install the grille.

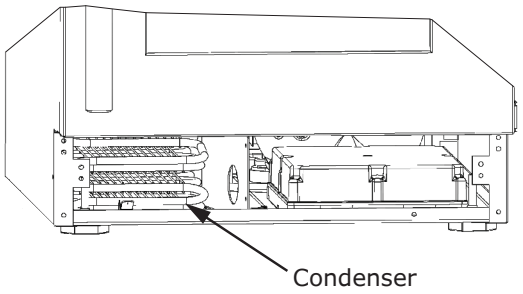

Extended Non-Use

VACATION/HOLIDAY, PROLONGED SHUTDOWN

The following steps are recommended for periods of extended non-use:

1. Remove all consumable content from the unit.

2. Disconnect the power cord from its outlet/socket and leave it disconnected until the unit is returned to service.

3. If ice is on the evaporator, allow ice to thaw naturally.

4. Clean and dry the interior of the unit. Ensure all water has been removed from the unit.

5. The door must remain open to prevent formation of mold and mildew. Open door a minimum of 2" (50 mm) to provide the necessary ventilation.

WINTERIZATION

If the unit will be exposed to temperatures of 40°F (5°C) or less, the steps above must be followed.

For questions regarding winterization, please call U-Line at 414.354.0300.

⚠ CAUTION

Damage caused by freezing temperatures is not covered by the warranty.

Troubleshooting

BEFORE CALLING FOR SERVICE

If you think your U-Line product is malfunctioning, read the CONTROL OPERATION section to clearly understand the function of the control.

If the problem persists, read the NORMAL OPERATING SOUNDS and TROUBLESHOOTING GUIDE sections below to help you quickly identify common problems and possible causes and remedies. Most often, this will resolve the problem without the need to call for service.

IF SERVICE IS REQUIRED

If you do not understand a troubleshooting remedy, or your product needs service, contact U-Line Corporation directly at +1.616.754.5601.

When you call, you will need your product Model and Serial Numbers. This information appears on the Model and Serial number plate located on the upper right or rear wall of the interior of your product.

NORMAL OPERATING SOUNDS

All models incorporate rigid foam insulated cabinets to provide high thermal efficiency and maximum sound reduction for its internal working components. Despite this technology, your model may make sounds that are unfamiliar.

Normal operating sounds may be more noticeable because of the unit's environment. Hard surfaces such as cabinets, wood, vinyl or tiled floors and paneled walls have a tendency to reflect normal appliance operating noises.

Listed below are common refrigeration components with a brief description of the normal operating sounds they make. NOTE: Your product may not contain all the components listed.

- Compressor: The compressor makes a hum or pulsing sound that may be heard when it operates.
- Evaporator: Refrigerant flowing through an evaporator may sound like boiling liquid.
- Condenser Fan: Air moving through a condenser may be heard.
- Automatic Defrost Drain Pan: Water may be heard dripping or running into the drain pan when the unit is in the defrost cycle.

TROUBLESHOOTING GUIDE

⚠ DANGER

ELECTROCUTION HAZARD. Never attempt to repair or perform maintenance on the unit before disconnecting the main electrical power.

Troubleshooting - What to check when problems occur:

Problem	Possible Cause and Remedy
Interior Light Does Not Illuminate	If the unit is cooling, it may be in Sabbath mode.
Light Remains on When Door Is Closed.	Turn off light switch if equipped. Adjust light actuator bracket on bottom of door.
Unit Develops Frost on Internal Surfaces.	Ensure the door is closing and sealing properly.
Unit Develops Condensation on External Surfaces.	The unit is exposed to excessive humidity. Moisture will dissipate as humidity levels decrease.
Product is Not Cold Enough	Air temperature does not indicate product temperature. See CHECKING PRODUCT TEMPERATURE below. Adjust the temperature to a cooler set point. Ensure unit is not located in excessive ambient temperatures or in direct sunlight. Ensure the door is closing and sealing properly. Ensure the interior light has not remained on too long. Ensure nothing is blocking the front grille, found at the bottom of the unit. Ensure the condenser coil is clean and free of any dirt or lint build-up.

CHECKING PRODUCT TEMPERATURE

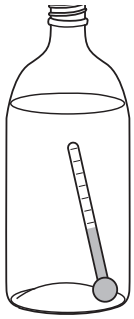

To check the actual product temperature in the unit:

1. Partially fill a plastic (nonbreakable) bottle with water.
2. Insert an accurate thermometer.
3. Tighten the bottle cap securely.
4. Place the bottle in the desired area for 24 hours.
5. Avoid opening the unit during the testing period.
6. After 24 hours, check the temperature of the water. If required, adjust the temperature control in a small increment (see CONTROL OPERATION).

Causes which affect the internal temperatures of the cabinet include:

- Temperature setting.
- Ambient temperature where installed.
- Installation in direct sunlight or near a heat source.
- The number of door openings and the time the door is open.
- The time the internal light is illuminated. (This mainly affects product on the top rack or shelf.)
- Obstruction of front grille or condenser.

Wire Diagram

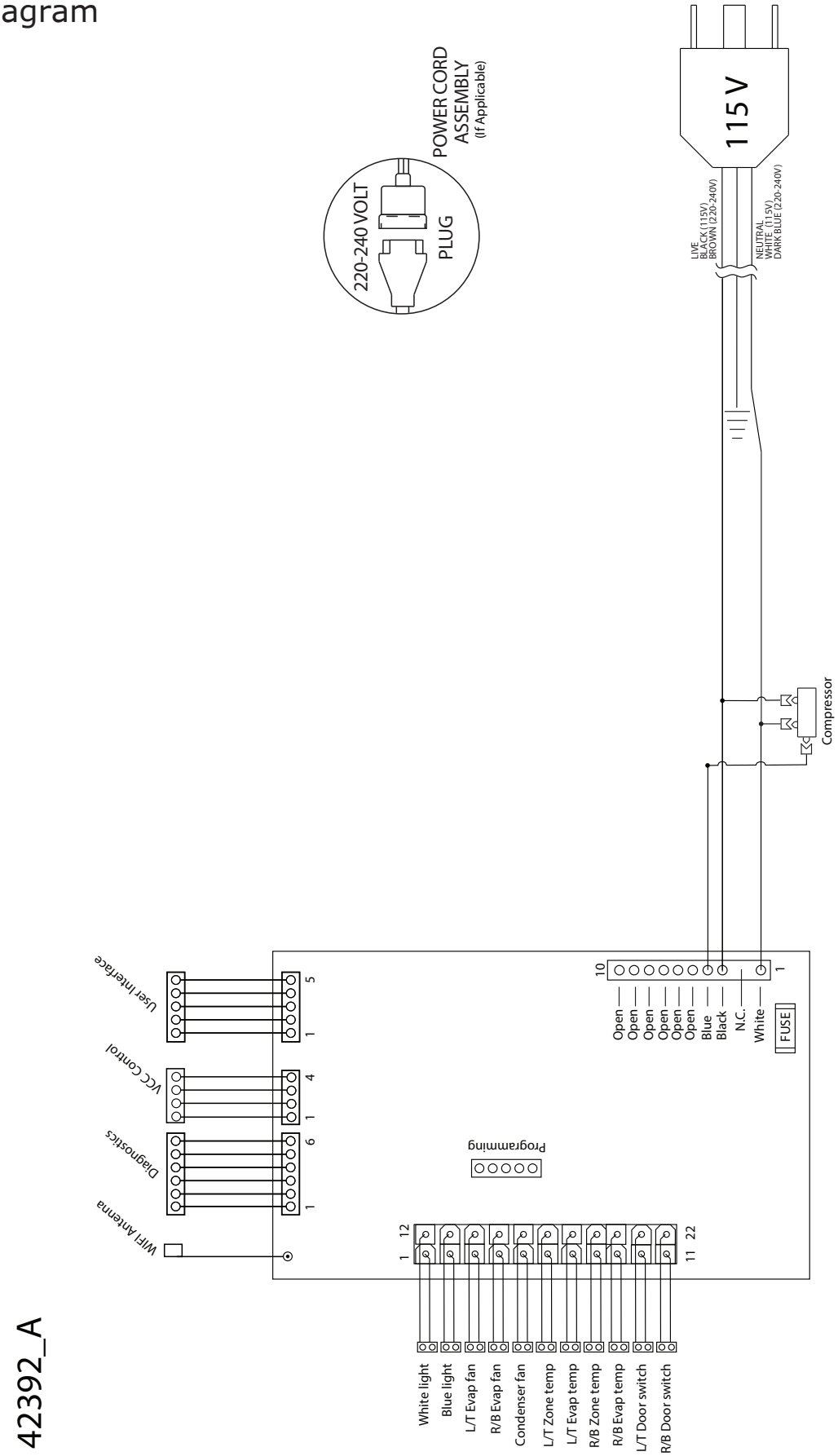

Product Liability

Field service technicians are authorized to make an initial assessment in the event of reported damages. If there are any questions about the process involved, the technician should call U-Line for further explanation.

While inspecting for defects or installation issues, photos should be taken to document any damages or issues found.

During the assessment, if the service technician is able to find the source of the damage and it can be resolved by replacement of a part, the servicer is authorized to replace the part in question. The part that caused the damage must be returned to U-Line in its entirety. The part must be clearly labeled with the serial number of the unit it was removed from, the date, and the servicer who removed the part.

If the service technician determines the damage is the result of installation issues (water connection/drain, etc.), the consumer would be notified and the issues shall be resolved at the direction of the consumer.

If damage is evident and the service technician is unable to find the source, U-Line must be contacted at +1.414.354.0300 for further direction.

8900 N. 55th Street • Milwaukee, WI 53223
T: +1.414.354.0300 • F: +1.414.354.5696
Website: www.u-line.com

Right product. Right place.
Right temperature Since 1962.

Parts

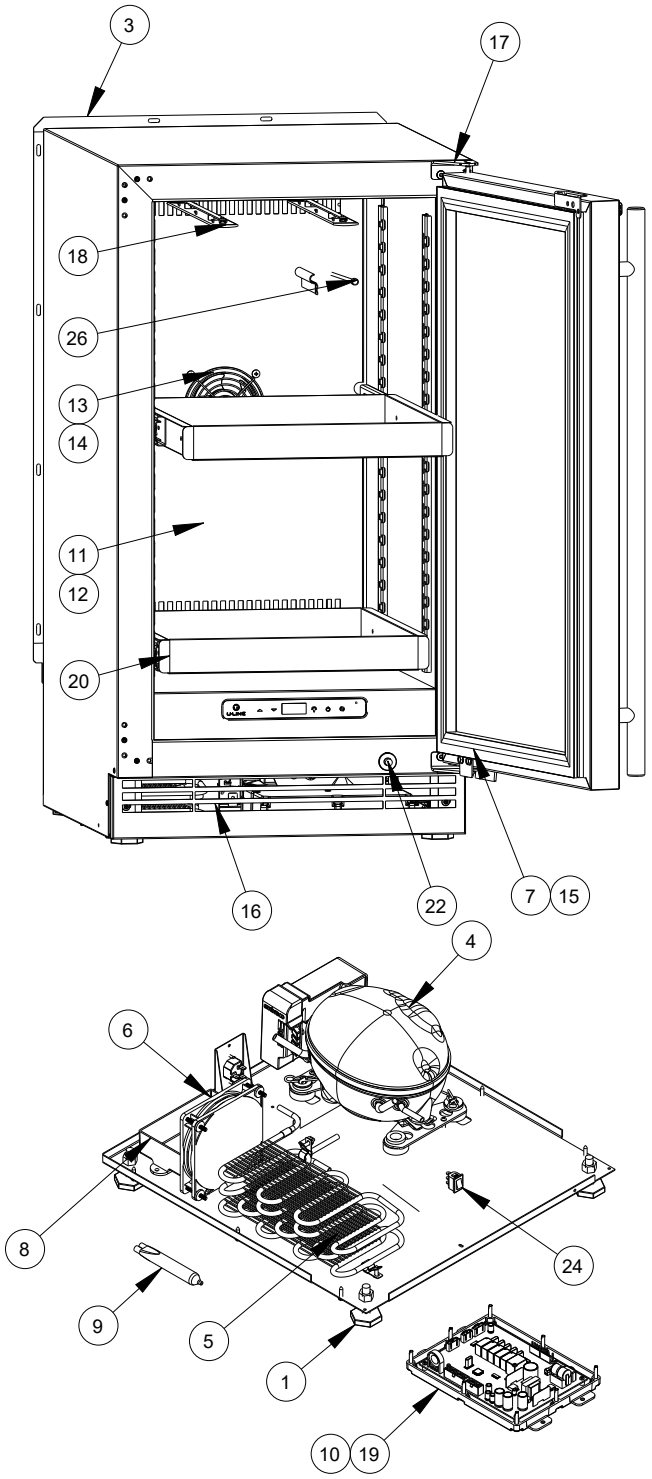

	UCRE518-SS33A	
Item	**Description**	**U-Line P/N**
1	LEG LEVELERS (4) 3/8"-16	80-54019-01
2	ANTI-TIP BRACKET W/SCREWS *	80-54221-00
3	BACK PANEL, 518 NSF	80-55474-01
4	COMPRESSOR 5 CLASS	80-55452-00
5	CONDENSER ASSY 5 CLASS	80-55453-00
6	CONDENSER FAN W/SCREWS	80-54014-00
7	DOOR, SS W/HINGES & LOCK	80-55656-05
8	DRAIN PAN	80-54217-00
9	DRIER	80-54055-00
10	ENCLOSURE ASSEMBLY, BOARD	80-54532-00
11	EVAP ASSY, 5 CLASS 18"	80-55478-00
12	EVAPORATOR COVER, 18"	80-55561-04
13	EVAPORATOR FAN	80-54807-00
14	EVAPORATOR FAN COVER W/SCREWS	80-54809-00
15	GASKET, DOOR 18" NSF	80-55656-04
16	GRILLE, 18" 5 CLASS	80-55479-00
17	HINGE ASSEMBLY, NSF	80-55374-02
18	LIGHT ASM, 2 COLOR	80-55272-00
19	MAIN BOARD/DISPLAY ASSEMBLY	80-55429-01
20	METAL SHELF 18"	80-55613-02
21	PACKAGING *	80-54145-00
22	PLUNGER SWITCH, NUGGET	80-55375-00
23	POWER CORD, EXTERNAL *	80-55362-00
24	ROCKER SWITCH	80-55603-00
25	SERIAL INVERTER 120V (FMX) *	80-55570-00
26	THERMISTOR (1 PC)	80-54006-00
27	WIRE HARNESS, HI VOLTAGE *	80-55592-01
28	WIRE HARNESS, LOW VOLTAGE *	80-55592-00

*Not Pictured

R-600A Specifications

For R-600a refrigerant service tips and more videos, go to: www.u-line.com/videos.

⚠ WARNING

Flammability warnings for a pure-iso-butane refrigerant.







Technician must observe all federal, state and local laws regarding refrigerants.

Gloves and Eye Protection must be used.





R-600a is considered non-toxic, but is flammable when mixed with air.

Keep a dry powder type fire extinguisher in the work area.



R-600a is heavier than air, do not allow any leakage/migration to low areas such as basements and stairs.

Never use a torch on a fully charged refrigeration system.

Never substitute U-Line OEM replacement parts or methods of construction.

R-600a must be stored and transported in approved containers.

⚠ WARNING

Only skilled and well trained service technicians permitted to service R-600a equipped products.

All tools and equipment must be approved for use with R-600a refrigerant.

Local, state and federal laws, standards must be observed along with proper certification and licensing.

Ventilation is required during servicing.

No conversions to R-600a from any other refrigerants. OEM R-600a equipped unit only.

Service area must be free of ignition sources.

No smoking is allowed in the service area.

All replacement electrical components must be OEM and installed properly (sealed and covered).

If the evaporator is cold prior to service, it must be thawed prior to service.

When using a vacuum pump, start pump before opening refrigeration system.

Vacuum pump and recovery equipment should be at least 10 feet from the work area.

It is recommended that a simple LPG gas detector is on site during service.

Ensure that all R-600a is removed from the system prior to brazing any part of the sealed system.

Only a clean, dry leak free system should be charged with R-600a.

R-600A SPECIFICATIONS/LABELING

R-600a equipped products are labeled (both the unit and the compressor).

R-600a is colorless and odorless.

R-600a is considered non-toxic, but is flammable when mixed with air.

Do not remove or alter any R-600a labeling on the product.

Use only a refrigerant grade R-600a from a properly labeled container.

RECOVERING/RECLAIMING R-600A

(R-600a has been exempted from recovery/reclaiming requirements by the US EPA)

Recovery/Reclaiming equipment must be approved for use with R-600a.

Ensure the evaporator is at room temperature prior to recovery/reclaiming R-600a.

Use a common piercing pliers or piercing valve to remove R-600a from the compressor process tube. (Note: Piercing devices must not be left on the system and must be replaced with a Schrader type valve.)

Evacuate/reclaim via the piecing pliers to ensure the system is empty of R-600a before any system work is performed.



The recovery cylinder must be evacuated (no air inside) prior to accepting R-600a.

The recovery cylinder must not be filled more than 45% safe fill level and refrigerants must not be mixed.

The recovery cylinder must be clearly marked with R-600a and Flammable Warning labels.

Ensure proper ventilation during recovery/reclaiming of R-600a.

Start vacuum pump/recovery pump prior to piercing the compressor process tube.

Follow recovery/reclaim OEM instructions for the specific equipment used.

SYSTEM REPAIR

Ensure no residual R-600a refrigerant is left within the system prior to repair (simple venting is not sufficient).

Evacuate and charge with dry nitrogen for leak checks.

Repair leaks or replace system parts as required.

When re-brazing, the system must be purged with dry nitrogen and at least one access point open to the atmosphere.

When re-brazing, proper ventilation is required along with constant monitoring for the presence of R600a refrigerant.

The filter dryer must be replaced any time the sealed system is serviced.

No system should be open to the atmosphere for longer than 15 minutes to avoid moisture migration into the system components.

LEAK DETECTION

After removal of the R-600a, the unit can be charged with dry nitrogen or helium.

Electronic leak detection or soap solution can be used to check for nitrogen/helium leaks.



Never use a halide torch or lighted match to check the system for leaks at any time.

The high side of the refrigeration system (compressor discharge to outlet of drier) must be leak tested with the compressor running.

The low side of the refrigeration system (evaporator, compressor and suction line) must be leak tested with the compressor off (equalized pressure).

RECHARGING

No air is ever to be allowed inside the refrigeration system (R-600a refrigerant or dry nitrogen only).

Never use a torch on a fully charged refrigeration system.

Install a Schrader Type access port on the compressor process stub.



Evacuate the system to 100 microns prior to charging.

Weigh in the R-600a charge using a refrigerant scale. (run compressor an extra two minutes to clear the charging hoses).

Seal the Schrader Type access port, a proper cap and seal must be used to close the system.



SUMMARY

Safely handling R-600a requires proper procedures and training.

R-600a approved service tools must be used.

R-600a labeling must not be removed or altered.

Proper ventilation during service is required.

Never apply a torch to a charged R-600a refrigeration system.

Use OEM replacement service parts and do not alter the construction of the unit.

System Diagnosis Guide

REGRIGERATION SYSTEM DIAGNOSIS GUIDE

System Condition	Suction Pressure	Suction Line	Compressor Discharge	Condenser	Capillary Tube	Evaporator	Wattage
Normal	Normal	Slightly below room temperature	Very hot	Very hot	Warm	Cold	Normal
Overcharge	Higher than normal	Very cold may frost heavily	Slightly warm to hot	Hot to warm	Cool	Cold	Higher than normal
Undercharge	Lower than normal	Warm- near room temperature	Hot	Warm	Warm	Extremely cold near inlet - Outlet below room temperature	Lower than normal
Partial Restriction	Somewhat lower than normal vacuum	Warm- near room temperature	Very hot	Top passes warm - Lower passes cool (near room temperature) due to liquid	Room temperature (cool) or colder	Extremely cold near inlet - Outlet below room temperature backing up	Lower than normal
Complete Restriction	In deep vacuum	Room temperature (cool)	Room temperature (cool)	Room temperature (cool)	Room temperature (cool)	No refrigeration	Lower than normal
No Gas	0 PSIG to 25"	Room temperature (cool)	Cool to hot	Room temperature (cool)	Room temperature (cool)	No refrigeration	Lower than normal

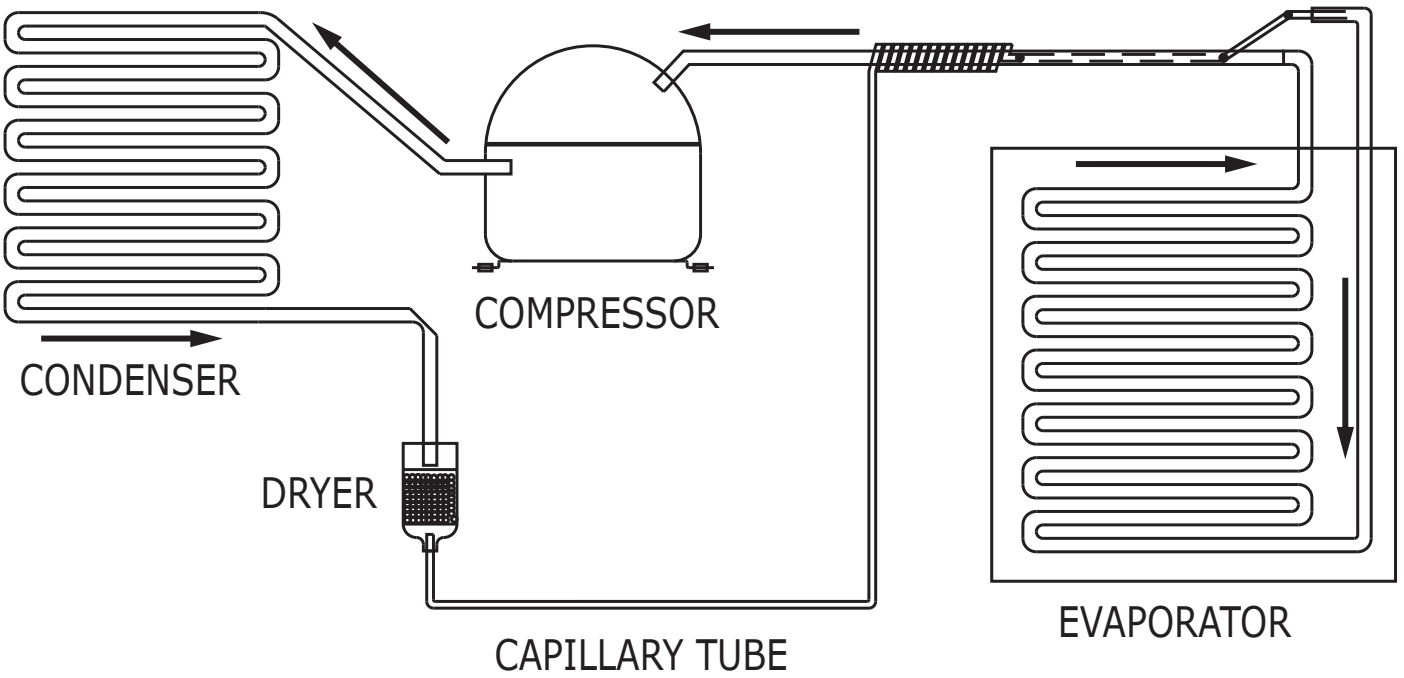

Compressor Specifications

⚠ DANGER

Electrocution can cause death or serious injury. Burns from hot or cold surfaces can cause serious injury. Take precautions when servicing this unit.

Disconnect the power source.

Do not stand in standing water when working around electrical appliances.

Make sure the surfaces you touch are not hot or frozen.

Do not touch a bare circuit board unless you are wearing an anti-static wrist strap that is grounded to an electrical ground or grounded water pipe.

Handle circuit boards carefully and avoid touching components.

	FMXA9C
REFRIGERANT	R600A
VOLTAGE	230 VAC
FREQUENCY	43-134 Hz
START WINDING	20 Ohm at 77° F
RUN WINDING	20 Ohm at 77° F
RUN TO START	20 Ohm at 77° F
LRA	1.7 A
FLA	1.7 A
STARTING DEVICE	Inverter CF02C05
OVERLOAD	Inverter CF02C05

*All resistance readings are ± 10%

Troubleshooting - Extended

⚠ CAUTION

Never attempt to repair or perform maintenance on the unit until the main electrical power has been disconnected from the unit.

SPECIFIC ERRORS AND ISSUES

The advanced diagnostic capabilities of the electronic controls utilized on the 1, 3, and 5 Class units allow for easy and thorough troubleshooting.

Navigation of the control is the key and is explained in the CONTROL OPERATION section of the manual, along with control button layout, control function descriptions, a service mode menu and service menu selection explanations.

Verification of temperature and thermistor performance can be identified by directly viewing thermistor readings in the service mode.

Included in this section are some diagnostic tips; if additional help is required, please contact the U-Line Corp, “Customer Care Facility” at +1.414.354.0300 for assistance.

NORMAL OPERATING SOUNDS

All models incorporate rigid foam insulated cabinets to provide high thermal efficiency and maximum sound reduction for its internal working components. Despite this technology, your model may make sounds that are unfamiliar.

Normal operating sounds may be more noticeable because of the unit’s environment. Hard surfaces such as cabinets, wood, vinyl or tiled floors and paneled walls have a tendency to reflect normal appliance operating noises.

Listed below are common refrigeration components with a brief description of the normal sounds they make. NOTE: Your product may not contain all the components listed.

- Compressor: The compressor makes a hum or pulsing sound that may be heard when it operates.
- Evaporator: Refrigerant flowing through an evaporator may sound like boiling liquid.
- Condenser Fan: Air moving through a condenser may be heard.
- Automatic Defrost Drain Pan: Water may be heard dripping or running into the drain pan when the unit is in the defrost cycle.

Solenoid Valves: An occasional clicking sound may be heard as solenoid valves are operated.

TROUBLESHOOTING GUIDE

Concern	Potential Causes	Action
Not Cooling	Compressor overheating	Verify proper air flow through condenser. Is condenser clean?
		Confirm condenser fan operation.
	Compressor not operating	Test overload and relay, replace as needed.
	Compressor operating - no cooling	Refer to System Diagnosis Guide.
Frozen Product	Control set too cold	Adjust Set Point Temp accordingly.
	Thermistor failure	Check Error Log in Service Mode, OHM thermistor.
Frost Buildup Inside Unit	Door Ajar or Restricted from Closing	Check door clearance to adjoining cabinetry. Check distribution of product in unit.
	Thermistor failure	OHM thermistor
Display Not Working	Display unplugged	Verify that both ends of the display wiring are firmly connected.
	Display wiring broken or damaged	Perform continuity test of wiring and replace as needed.
Interior Lights Not Working	Door switch misaligned or defective	Check the function of reed switch and door magnet adjustment.
Noisy	Refrigeration tubing touching cabinet	Carefully reposition tubing.
	Fan blade obstruction (wiring, foam insulation, packaging material)	Remove obstruction.

MAIN CONTROL

The main control board is very robust and is rarely the cause of system issues. It is important to fully diagnose the board for any suspected failures before attempting to remove the board for replacement or service. Follow the guidelines below to fully test and diagnose the main control.

Power Fault

If the unit does not (or seems to not) power on, follow the flow chart below to help diagnose the issue. Before beginning it is important to first verify the unit is not simply set to sabbath mode.

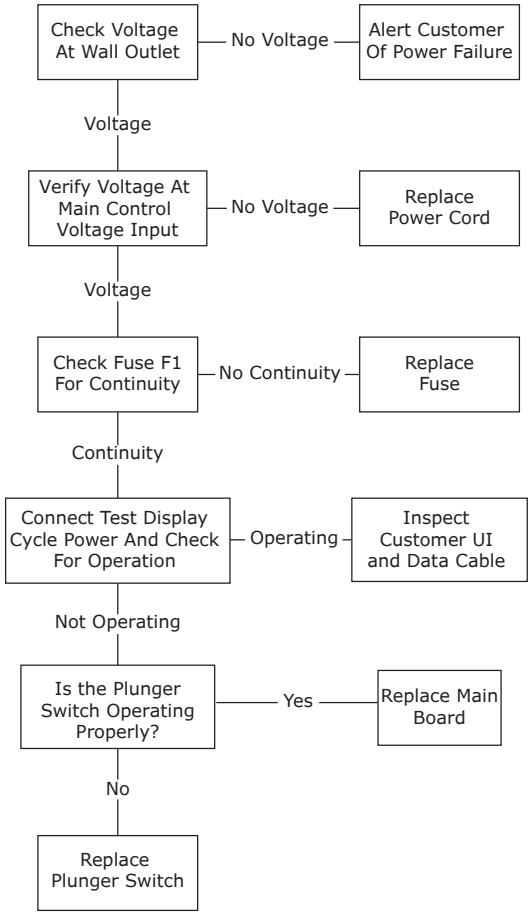

⚠ CAUTION

Precautions must be taken while working with live electrical equipment. Be sure to follow proper safety procedures while performing tests on live systems.

PLUNGER SWITCH

A plunger switch is used to monitor door state. When the door is closed it comes into contact with the plunger which closes a circuit which turns the light and display off. When the door is open the plunger moves outward and opens the circuit. If the door is left open for longer than 5 minutes the switch will trigger an error code and set an audible warning.

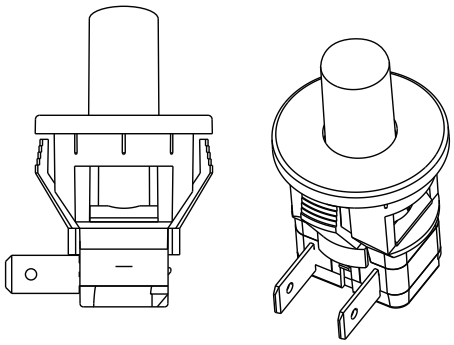

Control Operation-Service

UI BUTTON LAYOUT

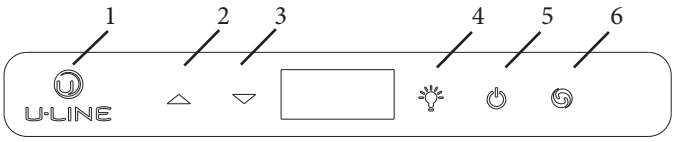

1. **Hidden Button**
   -Access Service Menu
   -No LED directly above. All LEDs turn on with button

2. **Up Button**
   -Increases temperature
   -Navigates through service menu

3. **Down Button**
   -Decreases temperature
   -Navigates through service menu

4. **Light Button**
   -Activates light for 3 hours on select models
   -Used to select items in service menu

5. **Power Button**
   -Turns unit off/on

6. **Clean Button**
   -Activates Clean Cycle on select models
   -Toggles between zones in Dual-Zone models

CONTROL FUNCTION GUIDE

FUNCTION	COMMAND	DISPLAY/OPTIONS
ON/OFF	Press ⏻ and release	Unit will immediately turn ON or OFF
Sabbath Mode	See "Sabbath Mode" section	

SHOWROOM MODE

This mode is designed to show units in a display environment. When in this mode the only functions will be the control and cabinet lights. The compressor, fans, etc. will not operate. To enter/exit this mode hold the light key and the power key for 5 seconds. The display will flash once and beep and the degree symbol will begin to flash. When the degree symbol is flashing the unit will allow the use of the control for demonstrations. The unit can be left in this mode indefinitely.

SERVICE MODE

This mode has options available for service diagnostics. To enter the mode hold the hidden key for 10 seconds. The display will show "0." When in this mode use the up and down arrows to select the desired option. The LIGHT key is the ENTER key and will initiate the function. If changing a setting, you must press the LIGHT key again to retain the changed setting. To exit the service mode scroll to option "0" and press the LIGHT key. After five minutes of not touching any keys the mode will also exit automatically.

SERVICE MODE GUIDE

0. Exit
1. Thermistor 1 temperature not including offsets.
2. Thermistor 2 temperature not including offsets.
3. Thermistor 3 temperature not including offsets.
4. Thermistor 4 temperature not including offsets.
5. Thermistor 1 offset. (+/- 10)
6. Thermistor 2 offset. (+/- 10)
7. Thermistor 3 offset. (+/- 10)
8. Thermistor 4 offset. (+/- 10)
9. Thermistor 2 set point
10. Thermistor 3 set point.
11. Thermistor 4 set point.
12. Defrost Interval (0 to 99 hr)
13. Defrost duration (0 to 99 min)
14. Error Log (See Appx D)
15. Clear error log (hold light key until cleared)
16. Thermistor 1 differential (+5)
17. Thermistor 3 differential (+5)
18. Evaporator fan on delay (0 to 99 sec)
19. Evaporator fan off delay (0 to 99 sec)
20. Individual component toggle
    - Option #0 – Exit
    - Option #1 – Relay 1
    - Option #2 – Relay 2
    - Option #3 – Relay 3
    - Option #4 – Relay 4
    - Option #5 – Relay 5
    - Option #6 – Relay 6
    - Option #7 – DC Output 1
    - Option #8 – DC Output 2
    - Option #9 – DC Output 3
    - Option #10 – DC Output 4
    - Option #11 – DC Output 5
    - Option #12 – Serial output (Compressor)
21. Model number
22. Light All Segments
23. Activate Defrost/Harvest- press and hold for 3 seconds to activate defrost/harvest
24. Defaults- press and hold for 3 seconds to restore all values to factory defaults.
25. Main Software (Display only)
26. Live Log Period (frequency that data is output to diagnostics port)
27. Factory test mode (0=Off, 1=On)
28. Compressor RPM
29. Freeze time adjust (Model 54 only)
30. Harvest time adjust (Model 54 only)
31. Low temp alarm limit (Model 55 only)
32. High temp alarm limit (Model 55 only)

SERVICE MODE GUIDE

1. **THERMISTOR 1 — ZONE**
   This shows the pure thermistor reading with no offsets taken into account.
2. **THERMISTOR 2 — EVAPORATOR**
   This shows the pure thermistor reading with no offsets taken into account.
3. Does not apply to this model.
4. Does not apply to this model.
5. **THERMISTOR 1 — ZONE OFFSET**
   (DO NOT MAKE AN ADJUSTMENT TO THIS WITHOUT CONTACTING TECH LINE: 800-779-2547)
   This calibration is only to be used if actual temperature at thermistor #1 is off from set point. By adjusting the offset higher we can force the unit to drive the temperature down below the set point. (example: adjusting from 0 to +2 will drop the unit temperature 2 degrees)
6. **THERMISTOR 2 — EVAPORATOR OFFSET**
   (DO NOT MAKE AN ADJUSTMENT TO THIS WITHOUT CONTACTING TECH LINE: 800-779-2547)
7. Does not apply to this model.
8. Does not apply to this model.
9. **THERMISTOR 2 — SET POINT MINUS OFFSET**
   This shows the thermistor reading with offsets taken into account.
10. Does not apply to this model.
11. Does not apply to this model.
12. **ADJUST DEFROST INTERVAL — 3 TO 24 HOURS**
    This will adjust the interval between defrosts from 3 to 24 hours. Adjusting from the factory settings may cause undesired temperature in the refrigerator section.
13. **ADJUST DEFROST DURATION — 0 TO 99 MINUTES**
    The length of the defrost can be adjusted 0 to 99 minutes long. The other defrost parameters still apply. Lengthening a defrost may cause higher than normal temperatures in the refrigerator section.
14. **VIEW ERROR LOG**
    A list of errors in the order they occurred will scroll on the display. All errors are logged in memory. Only door error is displayed on the display and has an audible signal.
    E0: Door 1 (upper) open.
    E1: Thermistor 1 open.
    E2: Thermistor 2 open.

E3: Thermistor 3 open.

E4: Thermistor 4 open (Does not apply to this model).

E5: Thermistor 1 shorted.

E6: Thermistor 2 shorted.

E7: Thermistor 3 shorted.

E8: Thermistor 4 shorted (Does not apply to this model).

E9: Door 2 (lower) open.

P1: Pump Circuit open (Does not apply to thismodel).

15: **CLEAR ERROR LOG**

To clear errors, press and hold  (5 seconds) when CLR is flashing.

16: **THERMISTOR - 1 DIFFERENTIAL**

This number should not be adjusted.

17. Does not apply to this model.
18. **THIS NUMBER SHOULD NOT BE ADJUSTED**
19. **THIS NUMBER SHOULD NOT BE ADJUSTED**
20. **INDIVIDUAL COMPONENT TOGGLE**

Display #	Relay / Output

- Option #0 – Exit
- Option #1 – Relay 1
- Option #2 – Relay 2
- Option #3 – Relay 3
- Option #4 – Relay 4
- Option #5 – Relay 5
- Option #6 – Relay 6
- Option #7 – DC Output 1
- Option #8 – DC Output 2
- Option #9 – DC Output 3
- Option #10 – DC Output 4
- Option #11 – DC Output 5
- Option #12 – Serial output (Compressor)

SEE RELAY / OUTPUT CHART

21. **MODEL NUMBER INDICATOR**

Displays the two-digit model number of the specific unit. See Model list table.

22. **LIGHT ALL LED SEGMENTS**

This will illuminate all the LEDs on the display to ensure they work properly

23. **ACTIVATE DEFROST /HARVEST**

-Press and hold for 3 seconds to activate

24. **FACTORY DEFAULTS**

-Press and hold for 3 seconds to restore all values to factory defaults

25. **MAIN SOFTWARE**
26. Does not apply to this model
27. **FACTORY TEST MODEL**

0 = Off, 1 = On

28. **COMPRESSOR RPM**
29. **FREEZE TIME ADJUST (MODEL 54 ONLY)**
30. **HARVEST TIME ADJUST (MODEL 54 ONLY)**
31. **LOW TEMP ALARM LIMIT (MODEL 55 ONLY)**
32. **HIGH TEMP ALARM LIMIT (MODEL 55 ONLY)**

MODEL LIST

Model #	
7	UHBV515-
9	UHBV518-
9	UHBV524-
11	U-CLR1215- ALL CLEAR ICE MODELS 2020 AND NEWER
15	UHFZ124/UOFZ1224
23	UHRE515-
25	UHRE518 /UHRE524-
37	UHWC515-
38	UHWC518 /UHWC524-
43	UHBD524-
48	UHWD524-
50	UHRF124-
52	UHRI124-
53	NUGGET 1 CLASS UHNP115/UHNB115 (134A)
54	UACP115-SS01A (CLEAR ICE ADA)
57	NUGGET 3 CLASS UHNP315/UHNB315
57	NUGGET 1 CLASS (R600)
57	UANP115- ADA NUGGET (R600)
79	UHCP115-**81A BRIGHT SHIELD CLEAR ICE MODELS
80	UHNP115-**81A BRIGHT SHIELD 3 CLASS NUGGET

PROGRAMMING THE UNIT TO CORRECT MODEL NUMBER

1. Disconnect the unit from power source.
2. Push and hold the U-Line button.
3. While still holding the U-Line button, plug the unit into the appropriate power source.
4. When the flashing digits appear (3-5 seconds), use the up and down arrow buttons to select the appropriate model number from the chart below. or
5. Press the light bulb button once.
6. The display will blink, and then will appear as the programmed display.

Relay / Output Chart

Program	Model	Relay 1	Relay 2	Relay 3	Relay 4	Relay 5	Relay 6	DC1	DC2	DC3	DC4	DC5
07	**BV515-***1A	Compressor	-	-	-	-	-	Light 1	Light 2	Evap Fan	-	Cond Fan
09	**BV524-***1A	Compressor	-	-	-	-	-	Light 1	Light 2	Evap Fan	-	Cond Fan
11	Clear Ice, 3 Class	Compressor	Water Dispense	Circ Pump	Water Inlet	Hot Gas Valve	Cond Fan	Light 1	Light 2	-	-	Cond Fan
15	**FZ1224											
23	**RE515-***1A	Compressor	-	-	-	-	-	Light 1	Light 2	Evap Fan	-	Cond Fan
25	**RE524-***1A	Compressor	-	-	-	-	-	Light 1	Light 2	Evap Fan	-	Cond Fan
29	**KR524-***1A	Compressor	-	-	-	-	-	Light 1	Light 2	Evap Fan	-	Cond Fan
37	**WC515-***1A	Compressor	-	-	-	-	-	Light 1	Light 2	Evap Fan	-	Cond Fan
38	**WC524-***1A	Compressor	-	-	-	-	-	Light 1	Light 2	Evap Fan	-	Cond Fan
43	**BD524-***1A	Compressor	Top/Left Valve	Bot/Right Valve	-	-	-	Light 1	Light 2	Evap Fan	Evap Fan 2	Cond Fan
48	**WD524-***1A	Compressor	Top/Left Valve	Bot/Right Valve	-	-	-	Light 1	Light 2	Evap Fan	Evap Fan 2	Cond Fan
50	**RF124-***1A	Compressor	-	-	Pan	Defrost Heater	Cond Fan	Light 1	Light 2	Evap Fan	-	Cond Fan
52	**RI124-***1A	Compressor	Icemaker 2	Icemaker 1	Pan	Defrost Heater	Cond Fan	Light 1	Light 2	Evap Fan	-	Cond Fan
53	Nugget Ice, R134	Comp/Fan	-	Dump Valve	Reservoir Fill	Auger	Water Main	Light 1	Light 2	-	-	Cond Fan
54												
57	Nugget Ice, R600	Water Main	Water Dispense	Dump Valve	Reservoir Fill	Auger	Cond Fan	Light 1	Light 2	-	-	Cond Fan
79	**CP115-**81A	Compressor	Water Dispense	Circ Pump	Water Inlet	Hot Gas Valve	Cond Fan	Light 1	Light 2	-	-	Cond Fan
80	**NP115-**81A	Water Main	Water Dispense	Dump Valve	Reservoir Fill	Auger	Cond Fan	Light 1	Light 2	-	-	Cond Fan

Thermistors

Thermistors are used for various temperature readings. Thermistors provide reliable temperature readings using a resistance which varies based on surrounding temperatures. If a faulty thermistor is suspected it may be tested using an accurate ohmmeter.

Both thermistors in the unit are identical. If a thermistor is suspected of being defective, the resistance can be verified. Place the thermistor in an ice water bath, the resistance should read 16.1k Ohms +/-5% on your meter.

Thermistor connections must be kept clean. A thermistor connection that has become corroded can cause resistance values from the thermistor to change as they pass through a dirty connection to the board.

It is for that reason that we apply dielectric grease to all of our thermistor connections. Dielectric grease will help to keep thermistor connections clean and dry.

If you change a thermistor in the unit please re-apply dielectric grease to the connection. If you encounter a dirty thermistor connection, you should replace the thermistor and the thermistor harness.

Thermistor error information can be found in the Control Operations - Service section.

This unit has **two** thermistors.

Thermistor one (Zone):

Located along the right hand side wall. It is used to maintain the operating temperature within that zone.

Thermistor two (Evaporator):

Located on the evaporator. It is used for defrost.

THERMISTOR FAILURE

Zone Thermistor

If the zone thermistor in the unit fails, the unit will continue to cool in a backup mode (Self Preservation Mode) to preserve the integrity of the contents. The unit will otherwise operate normally.

Evaporator Thermistor

If the evaporator thermistor fails, the unit will rely on a preset defrost timer during defrost cycles. The unit will otherwise operate normally. Refer to defrost section.

Thermistor Resistance Data

Temp (F)	Temp (C)	Nominal Resistance (OHMS)*
-40	-40	169157
-31	-35	121795
-22	-30	88766
-13	-25	65333
-4	-20	48614
5	-15	36503
14	-10	27681
23	-5	21166
32	0	16330
41	5	12696
50	10	9951
59	15	7855
68	20	6246
77	25	5000
86	30	4029
95	35	3266
104	40	2665
113	45	2186
122	50	1803
131	55	1495
140	60	1247
149	65	1044
158	70	879
167	75	743
176	80	631

* (+/- 5%)

Defrost

This unit defrosts, by default, every 12 hours of compressor runtime for 45 minutes. If you have verified that the unit does not have an ambient air leak, refer to the **Control Operation - Service** section and adjust unit to defrost every 9 hours for 60 minutes. Also, adjust the #2 thermistor to -4 instead of 0.

Remove Fan and Cover

CONVECTION COOLING

This unit is equipped with an advanced convection cooling system. Convection cooling stabilizes cabinet temperature, cools product faster and increases energy efficiency.

Evaporator Fan

The evaporator fan is responsible for circulating warm air from the refrigeration zone, past the evaporator and back into the refrigerated zone.

The evaporator fan is factory set to have a 1 minute delay at the beginning of a cooling cycle. This delay gives the evaporator time to cool properly before warm air is passed over it. The fan will continue to run for an additional 2 minutes at the end of a cooling cycle. Fan delay times can be modified through the service menu.

Evaporator fan operation is also determined by door switch state. If the door switch circuit opens, the fan will stop. When the door switch circuit is closed the fan will either continue running with the cooling cycle, or if not currently cooling, the fan will run for 1 minute to circulate air and clear any condensation that may have appeared on glass doors and shelves.

Note: If the unit is set to sabbath mode, the evaporator fan will no longer respond to the state of the door switch.

In order to operate efficiently, the evaporator fan blade and vents should be unobstructed and free of any dust buildup.

Evaporator Fan Replacement

Should the evaporator fan need to be replaced follow the steps below.

1. Remove any product from the unit.
2. Remove unit from cabinetry to access rear.
3. Disconnect power to the unit.
4. Remove back panel from unit.
5. Disconnect fan electrical connection at rear of unit.
6. Remove insulating foam from refrigerant line pass-through hole as needed to gain clearance for fan plug.
7. Remove internal shelving.
8. Remove 8 evaporator cover screws.

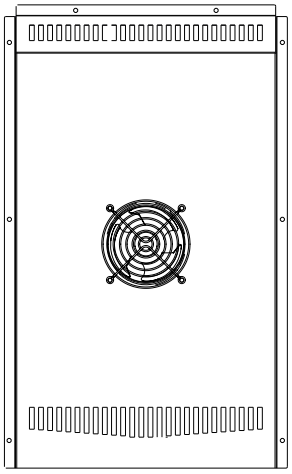

9. Grasp evaporator cover, pull forward and up as bottom of cover is installed behind the front edge of the drain trough.
10. While pulling the evaporator cover clear of the unit, it may be necessary to use your free hand to manipulate the fan plug end through the pass-through hole.
11. Remove the 4 screws mounting the fan shroud to the evaporator plate.

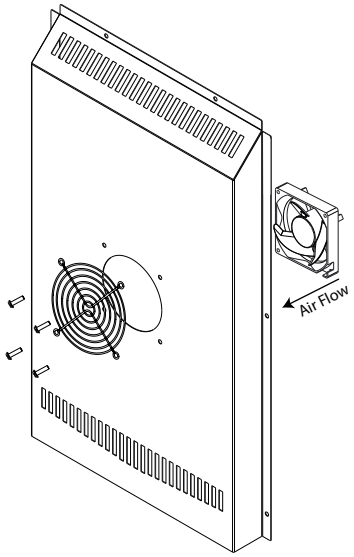

12. Remove and replace fan. Take special care to properly route fan wire.

NOTICE

Fan must be oriented to pull air in through lower evaporator cover vents and push air out at fan mounting location.

13. Installation is the reverse of removal.

14. Care must be taken to assure the bottom of the evaporator cover is reinstalled behind the front edge of the train trough.

15. Use sealant gum to seal any openings at rear of unit before replacing rear cover.

16. Reinstall unit taking care to level, space and secure as found.

U-Line Corporation (U-Line) Limited Warranty

One Year Limited Warranty

For one year from the date of original purchase, this warranty covers all parts and labor to repair or replace any part of the product that proves to be defective in materials or workmanship. For products installed and used for normal residential use, material cosmetic defects are included in this warranty, with coverage limited to 60 days from the date of original purchase. All service provided by U-Line under the above warranty must be performed by a U-Line factory authorized servicer, unless otherwise specified by U-Line. Service provided during normal business hours.

Two Year Limited Warranty (5 Class Product)

For two years from the date of original purchase, this warranty covers all parts and labor to repair or replace any part of the product that proves to be defective in materials or workmanship. For products installed and used for normal residential use, material cosmetic defects are included in this warranty, with coverage limited to 60 days from the date of original purchase. All service provided by U-Line under the above warranty must be performed by a U-Line factory authorized servicer, unless otherwise specified by U-Line. Service provided during normal business hours.

Available Second & Third Year Limited Warranty

In addition to the standard one and two year warranties outlined above, U-Line offers a one year extension of the warranties from the date of purchase, free of charge. To take advantage of this extension, you must register your product with U-Line within 60 days from the date of purchase at u-line.com and provide proof of purchase.

Five Year Sealed System Limited Warranty

For five years from the date of original purchase, U-Line will repair or replace the following parts, labor not included, that prove to be defective in materials or workmanship: compressor, condenser, evaporator, drier, and all connecting tubing. All service provided by U-Line under the above warranty must be performed by a U-Line factory authorized servicer, unless otherwise specified by U-Line. Service provided during normal business hours.

Terms

These warranties apply only to products installed in any one of the fifty states of the United States, the District of Columbia, or the ten provinces of Canada. The warranties do not cover any parts or labor to correct any defect caused by negligence, accident or improper use, maintenance, installation, service, repair, acts of God, fire, flood or other natural disasters. The product must be installed, operated, and maintained in accordance with your product's User Guide.

The remedies described above for each warranty are the only ones that U-Line will provide, either under these warranties or under any warranty arising by operation of law. U-Line will not be responsible for any consequential or incidental damages arising from the breach of these warranties or any other warranty, whether express, implied, or statutory. Some states do not allow the exclusion or limitation of incidental or consequential damages, so the above limitation or exclusion may not apply to you. These warranties give you specific legal rights, and you may also have other rights which vary from state to state.

Any warranty that may be implied in connection with your purchase or use of the product, including any warranty of *merchantability* or any warranty *fit for a particular purpose* is limited to the duration of these warranties, and only extends to five years in duration for the parts described in the section related to the five year limited warranty above. Some states do not allow limitations on how long an implied warranty lasts, so the above limitations may not apply to you.

- The warranties only apply to the original purchaser and are non-transferable.
- The second, third, and five year warranties cover products installed and used for normal residential or designated marine use only.
- The warranties apply to units operated outside only if designed for outdoor use by model and serial number.
- U-Line Commercial products are covered by the one year and 5 year limited warranties and are not eligible for the second and third year limited warranties.
- Replacement water filters, light bulbs, and other consumable parts are not covered by these warranties.
- The start of U-Line's obligation is limited to four years after the shipment date from U-Line.
- In-home instruction on how to use your product is not covered by these warranties.
- Food, beverage, and medicine loss are not covered by these warranties.
- If the product is located in an area where U-Line factory authorized service is not available, you may be responsible for a trip charge or you may be required to bring the product to a U-Line factory authorized service location at your own cost and expense.
- Units purchased after use as floor displays, and/or certified reconditioned units, are covered by the limited one year warranty only and no coverage is provided for cosmetic defects.
- Signal issues related to Wi-Fi connectivity are not covered by these warranties.

For parts and service assistance, or to find U-Line factory authorized service near you, contact U-Line:
8900 N. 55th Street, Milwaukee, WI 53223 • u-line.com • onlineservice@u-line.com • +1.414.354.0300

Copyright U-Line Corporation. All Rights Reserved. | Publication Number 30379 | 3/2024 Rev. Q