INSIGNIA™

USER GUIDE

11.5 Cu. Ft. Bottom Mount Refrigerator

NS-RBM11SS2/NS-RBM11SS2-C /NS-RBM11WH2/NS-RBM11WH2-C

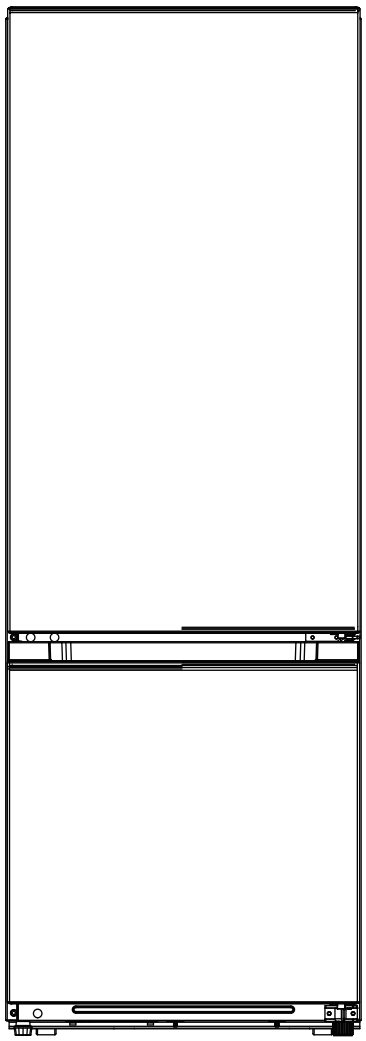

Before using your new product, please read these instructions to prevent any damage.

INSIGNIA™

Contents

Introduction 2
Features 5
- Package contents 5
- Dimensions 5
- Exterior 6
- Interior 7

Setting up your refrigerator 7
- Before using your refrigerator 7
- Finding a suitable location 7
- Providing correct ventilation 8
- Providing the correct power source 9
- Leveling your refrigerator 9
- Reversing the refrigerator door 9

Using your refrigerator 14
- Setting the refrigerator temperature 14
- Setting the freezer temperature 15
- Removing and inserting the glass shelves 15
- Removing and inserting the glass shelves 15
- Adjusting the refrigerator shelves 15
- Adjusting the door racks 16
- Removing the crisper drawer 16

Maintaining your refrigerator 17
- Cleaning your refrigerator 17
- Defrosting your refrigerator 17

Shutting down your refrigerator for a long time (several months) 17
Moving your refrigerator 17
Tips on saving energy 17
Tips on storing food 18
Tips for shopping for frozen foods 18
Troubleshooting 19
Specifications 20
ONE-YEAR LIMITED WARRANTY 21

Introduction

Congratulations on your purchase of a high-quality Insignia product. Your NS-RBM11SS2, NS-RBM11SS2-C, NS-RBM11WH2, or NS-RBM11WH2-C represents the state of the art in bottom mount refrigerator design and is designed for reliable and trouble-free performance.

IMPORTANT SAFETY INFORMATION

	**CAUTION** **RISK OF ELECTRIC SHOCK** **DO NOT OPEN**	

	This symbol indicates that dangerous voltage constituting a risk of electric shock is present within your refrigerator.

	This symbol indicates that there are important operating and maintenance instructions in the literature accompanying your refrigerator.

WARNING

1. Read these instructions.
2. Keep these instructions.
3. Heed all warnings.
4. Follow all instructions.
5. Do not use your refrigerator near water.
6. Clean only with a damp cloth.
7. Do not block any ventilation openings. Install in accordance with the manufacturer's instructions.
8. Do not install near any heat sources, such as radiators, heat registers, stoves, or other apparatus (including amplifiers) that produce heat.
9. Do not defeat the safety purpose of the polarized or grounding-type plug. A polarized plug has two blades with one wider than the other. A grounding type plug has two blades and a third grounding prong. The wide blade or the third prong are provided for your safety. If the provided plug does not fit into your outlet, consult an electrician for replacement of the obsolete outlet.
10. Protect the power cord from being walked on or pinched, particularly at plugs, convenience receptacles, and the point where it exits from your refrigerator.
11. Do not attempt to modify or extend the power cord of your refrigerator.
12. Unplug your refrigerator during lightning storms or when it will not be used for long periods of time.
13. Make sure that the available AC power matches the voltage requirements of your refrigerator.
14. Do not handle the plug with wet hands. This could result in an electric shock.
15. Unplug the power cord by holding the plug, never by pulling the cord.
16. Turn off your refrigerator before unplugging it.
17. Refer all servicing to qualified service personnel. Servicing is required when your refrigerator has been damaged in any way, such as the power-supply cord or plug is damaged, liquid has been spilled or objects have fallen into your refrigerator, your refrigerator has been exposed to rain or moisture, does not operate normally, or has been dropped.
18. To reduce the risk of fire or electric shock, do not expose your refrigerator to rain, moisture, dripping, or splashing, and no objects filled with liquids should be placed on top of it.
19. Do not use extension cords or ungrounded (two prong) adapters. If the power cord is too short, have a qualified electrician install an outlet near your refrigerator. Use of an extension cord can negatively affect your refrigerator's performance.
20. Your refrigerator is not intended for use by persons (including children) with reduced physical, sensory, or mental capabilities, or lack of experience and knowledge, unless they have been given supervision or instruction concerning use of your refrigerator by a person responsible for their safety.
21. Children should be supervised to ensure that they do not play with your refrigerator.
22. If the power cord is damaged, it must be replaced by the manufacturer, its service agent, or similarly qualified person, in order to avoid a hazard.

WARNING

Electric Shock Hazard

Failure to follow these instructions can result in electric shock, fire, or death.



1. **WARNING**–Keep ventilation openings, in both your refrigerator and the built-in structure, clear of obstruction.
2. **WARNING**–Do not touch the interior of your refrigerator with wet hands. This could result in frostbite.
3. **WARNING**–Do not use mechanical devices or other means to accelerate the defrosting process, other than those recommended by the manufacturer.
4. **WARNING**–Do not damage the refrigerant circuit.
5. **WARNING**–Do not damage the refrigerant tubing when handling, moving, or using your refrigerator.
6. **WARNING**–**DANGER**—Never allow children to play with, operate, or crawl inside your refrigerator.

   Risk of child entrapment. Before you throw away your old refrigerator:

   - Take off the door.
   - Leave the shelves in place so that children may not easily climb inside.
7. **WARNING**-Do not use electrical appliances inside the food storage compartments of the appliance unless they are of the type recommended by the manufacturer.
8. Unplug your refrigerator before carrying out user maintenance on it.
9. If a component part is damaged, it must be replaced by the manufacturer, its service agent, or similar qualified persons in order to avoid a hazard.
10. Follow local regulations regarding disposal of your refrigerator due to flammable refrigerant and gas. All refrigeration products contain refrigerants, which under the guidelines of federal law must be removed before disposal. It is the consumer's responsibility to comply with federal and local regulations when disposing of this product.
11. Do not store explosive substances such as aerosol cans with a flammable propellant in this appliance.
12. This appliance is intended to be used in household and similar applications such as
    - Staff kitchen areas in shops, offices, and other working environments
    - Farm houses and by clients in hotels, motels, and other residential type environments
    - Bed and breakfast type environments
    - Catering and similar non-retail applications

Grounding requirement

Your refrigerator must be grounded. Your refrigerator is equipped with a cord having a grounding wire with a grounding plug. The plug must be inserted into an outlet that is correctly installed and grounded.

Incorrect use of the grounding plug can result in a risk of electric shock. Consult a qualified electrician or service person if the grounding instructions are not completely understood, or if doubt exists as to whether your refrigerator is correctly grounded.

SAVE THESE INSTRUCTIONS

Features

Package contents

- 11.5 Cu. Ft. Refrigerator
- Hinge kit (for door reversal)
- *User Guide*

Dimensions

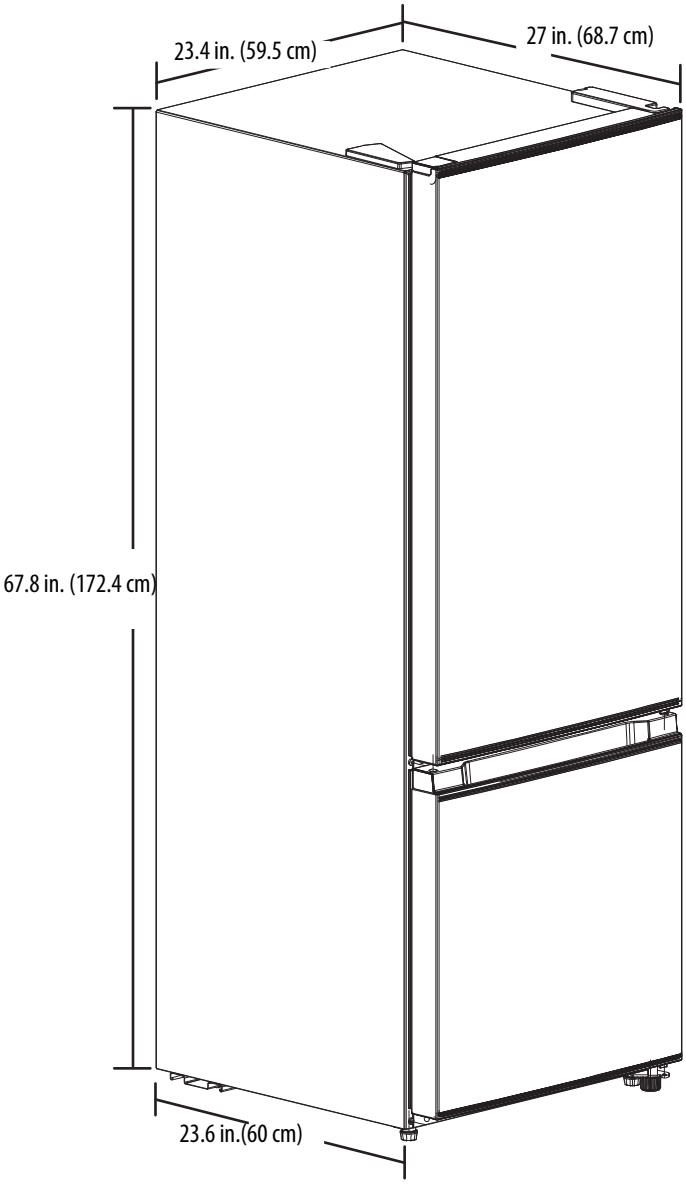

Exterior

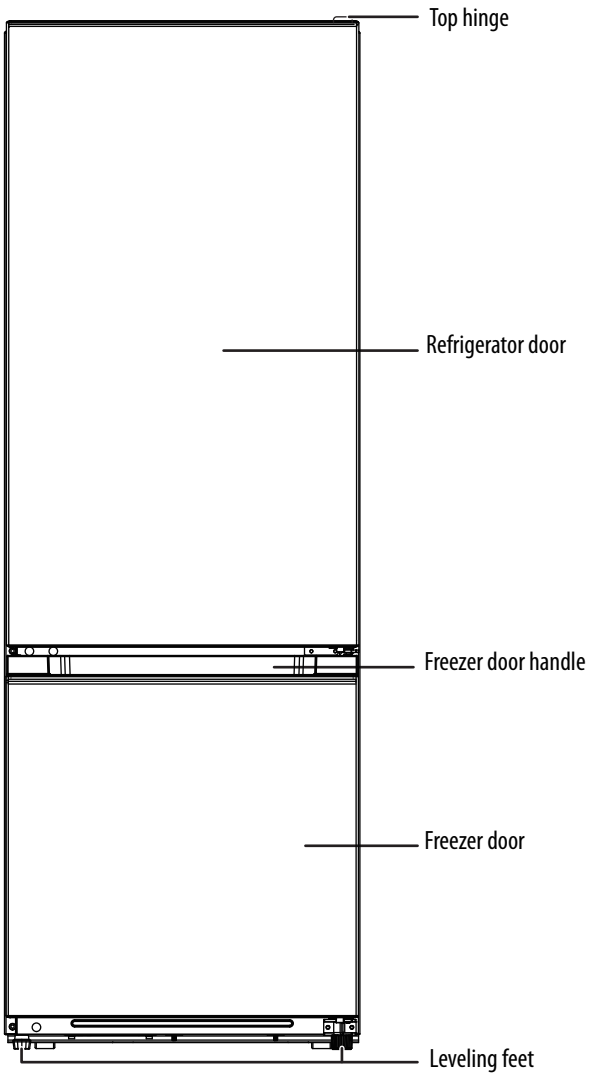
Top hinge
Refrigerator door
Freezer door handle
Freezer door
Leveling feet

Interior

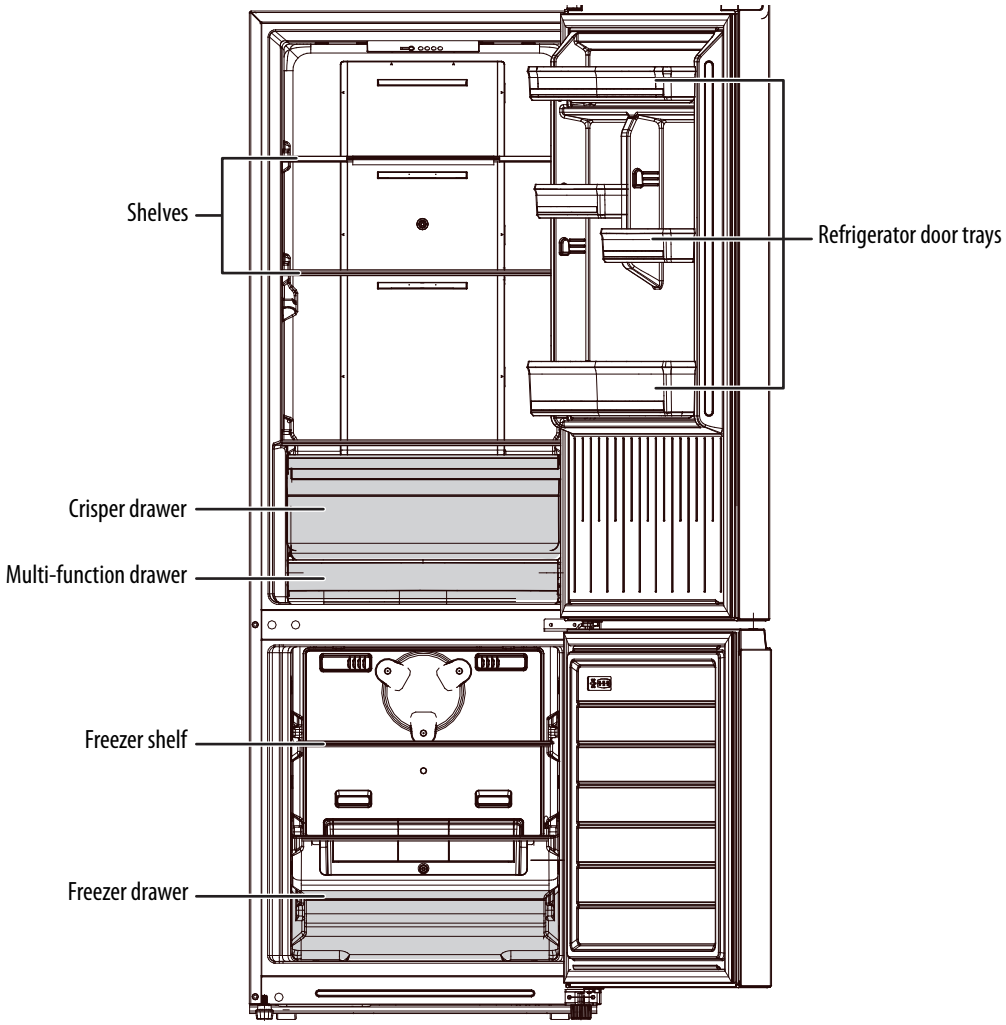

Setting up your refrigerator

Before using your refrigerator

- Remove the exterior and interior packaging.
- Wash the inside with a damp, warm cloth and a baking soda solution (two tablespoons in a quart of water), then wipe dry with a dry cloth. Do this periodically to keep your refrigerator looking new.
- Level your refrigerator using the leveling feet. If you do not level your refrigerator, the door may not close or seal correctly, causing cooling, frost, and moisture problems. Turn the leveling feet clockwise to raise or counterclockwise to lower a side.

Finding a suitable location

- Place your refrigerator on a floor that is strong enough to support it when fully loaded.
- Do not install your refrigerator on carpeting or a rug.
- Your refrigerator is designed to be free standing and should not be recessed or built-in.
- Do not install your refrigerator in a garage or any other outside installation.
- Adjust the feet to keep your refrigerator level.
- If you locate your refrigerator next to a fixed wall, allow sufficient space on the hinge side for the door to swing open.
- Position your refrigerator away from direct sunlight and sources of heat, such as a stove, heater, or radiator. Direct sunlight may affect the acrylic coating and heat sources may increase electrical consumption. Extremely cold temperatures may also prevent your refrigerator from performing correctly.
- Avoid locating your refrigerator in moist areas.

Your refrigerator is designed to operate in a temperature range of 50° to 110° F (10° to 43.3° C). If you operate your refrigerator outside this temperature range, your refrigerator may not work correctly.

Providing correct ventilation

Allow at least 8 in. (20.3 cm) between the left and right sides of your refrigerator and surrounding walls and at least 2 in. (5.1 cm) between the back and top of your refrigerator and the surrounding wall and ceiling.

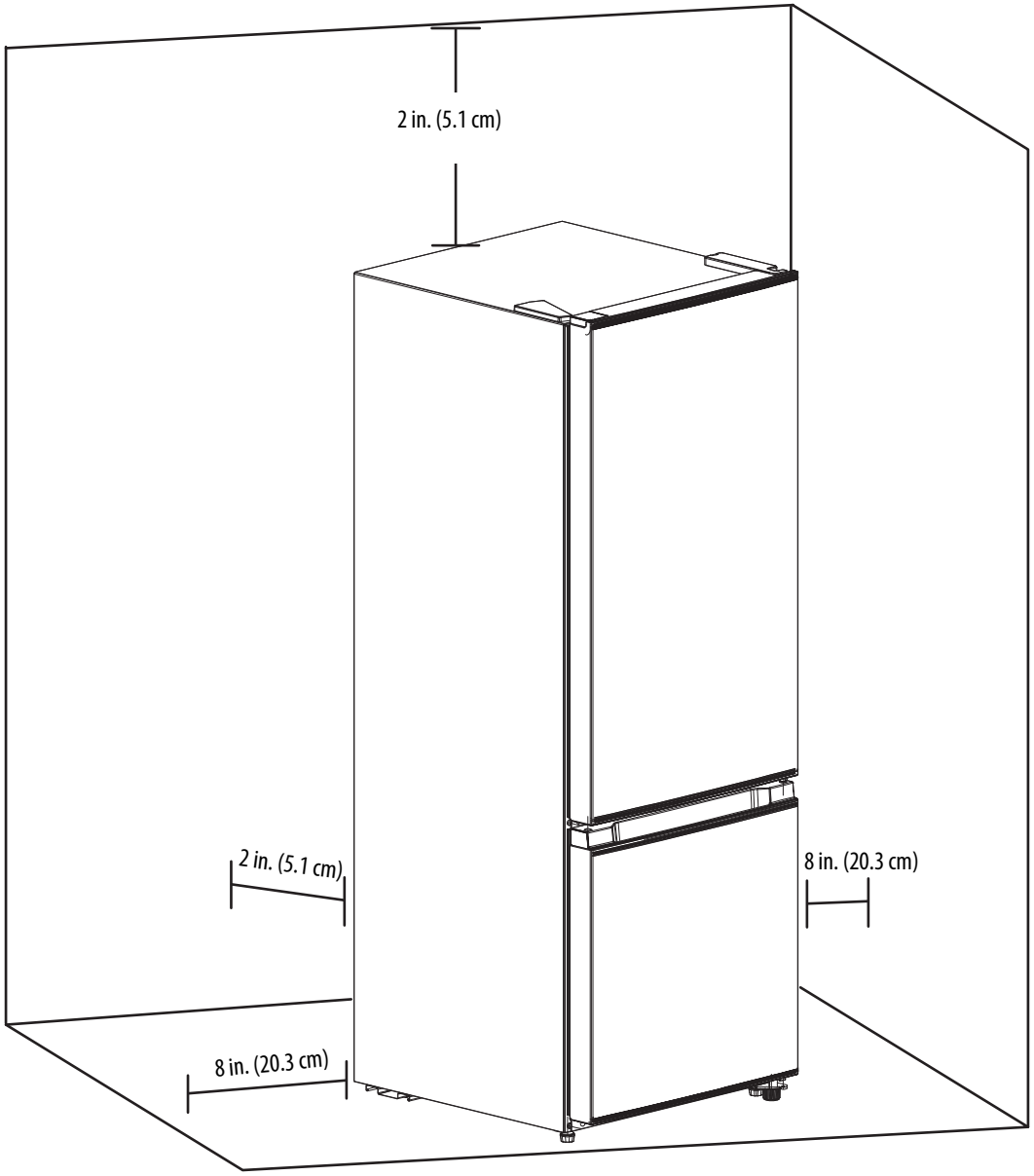

Providing the correct power source

Check your local power source. Your refrigerator requires a 115V, 60Hz power supply.

WARNINGS:
Make sure that:
- The power outlet accepts a 3-prong grounding plug. The third prong on the power cord plug grounds your refrigerator to minimize the possibility of electric shock. Do not modify the power plug.
- You do NOT plug anything else into the same power outlet as your refrigerator. You may overload the circuit which can cause a fire.
- You do NOT use an extension cord. If your refrigerator is too far from the power outlet, move your refrigerator or have a electrician install a plug closer to your refrigerator.
- The power outlet cannot be turned off with a switch or pull string.

Using a 3-prong plug and outlet

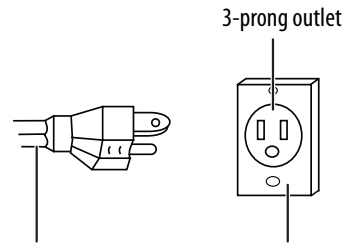

Using a grounding adapter

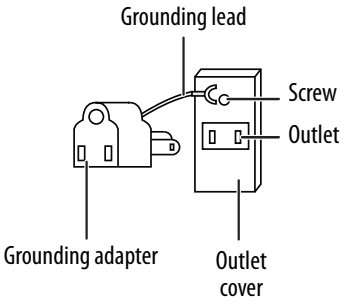

Leveling your refrigerator

Leveling your refrigerator is important. If you do not level your refrigerator during installation, the doors may not close or seal correctly which can cause cooling, frost, or moisture problems.

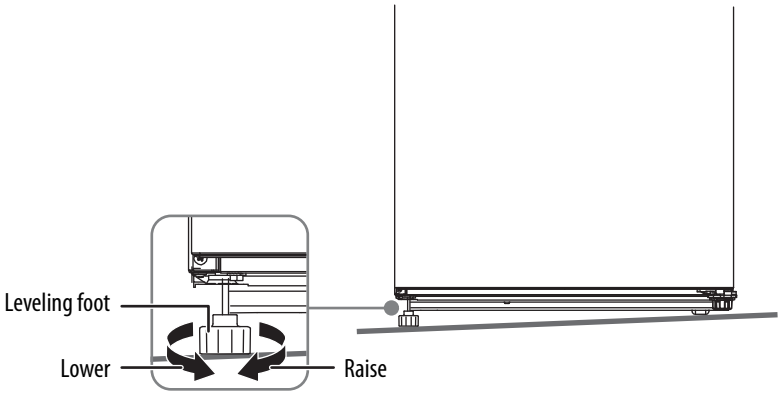

- Rotate the leveling feet clockwise (to raise) your refrigerator or counter-clockwise (to lower).

Note: To make it easier to adjust the feet, have someone push against the top of your refrigerator to tilt it slightly.

Reversing the refrigerator door

CAUTION: If you lay your refrigerator on its back or side for any length of time, wait for six hours after you stand it up again before you plug it in. Otherwise, you may damage internal components.

You will need the following tools to reverse the refrigerator door:

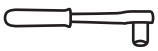
5/16" socket wrench


Phillips screwdriver


Straight blade screwdriver


Putty knife


Masking tape

The following is included with your refrigerator for the door reversal:
- Left-side upper hinge
- Left-side upper hinge cover
- Right-side hole cover

1 Make sure that your refrigerator is unplugged and empty.

2 Remove the left-side decorative cover, the right-side upper hinge cover, and right-side upper hinge.

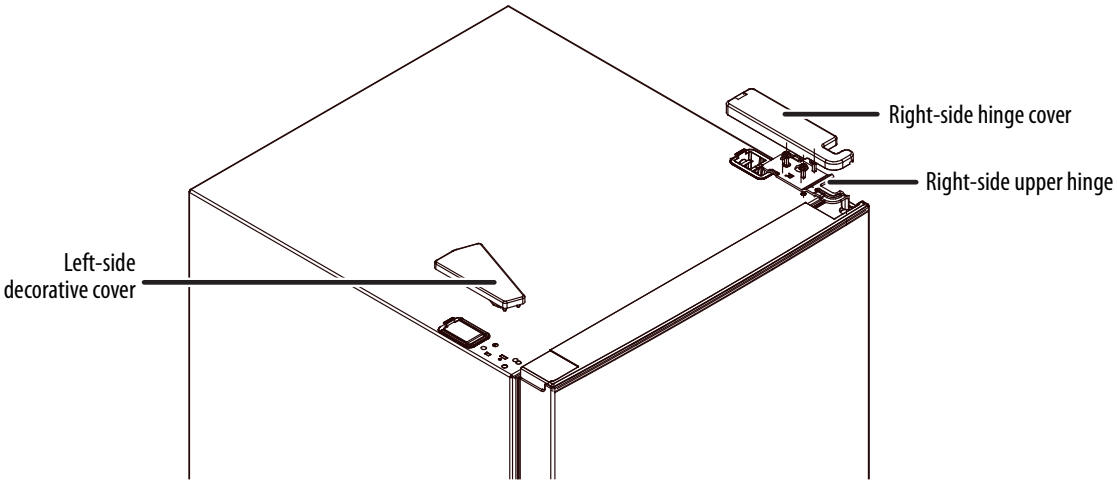

3 Remove the refrigerator compartment door from the cabinet.

CAUTION: Be careful not to lose any of the small parts, such as the shaft sleeve and door stop.

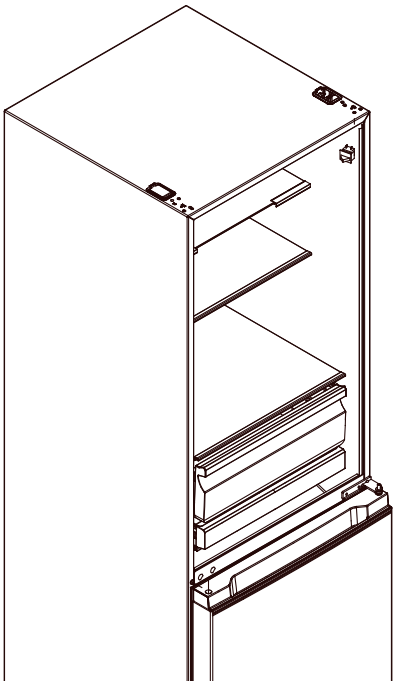

4 Remove the right-side middle hinge and the left-side hole cover.

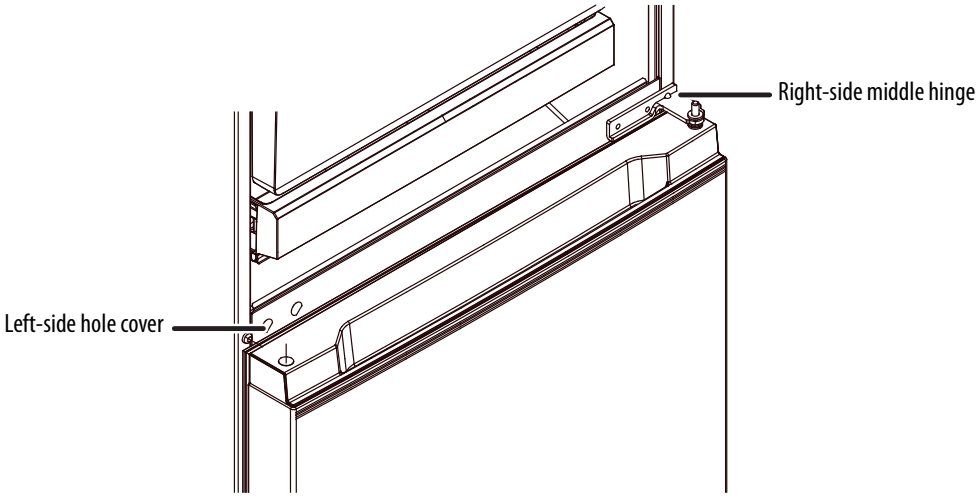

5 Remove the freezer door.

CAUTION: Be careful not to lose any of the small parts, such as the shaft sleeve and door stop.

6 Remove the screws holding the right-side lower hinge, then remove the hinge and the pivot shaft from it.

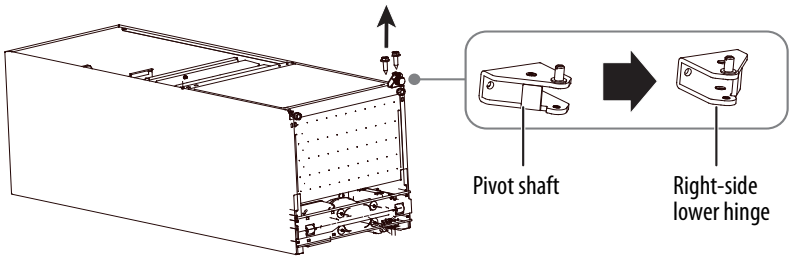

7 Install the pivot shaft on the other side of the lower hinge, then install the hinge on the left side of the refrigerator, using the screws you just removed.

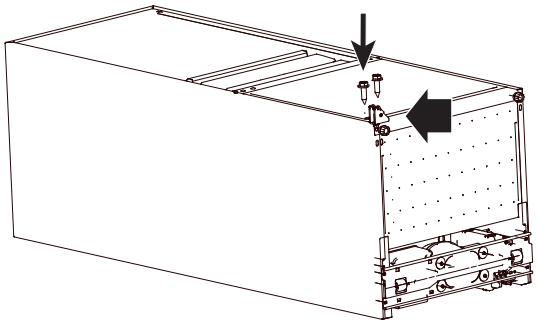

8 Remove the hole cover from the top-left side of the refrigeration door, remove the shaft sleeve from the top-right side of the refrigerator door, then remove the stopper from the bottom-right side of the refrigerator door.

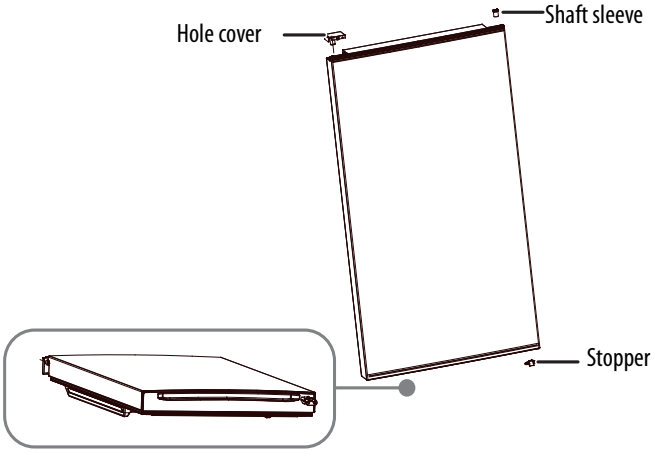

9 Install the hole cover in the top-right side of the refrigerator door, install the shaft sleeve in the top-left side of the door, then install the stopper into the bottom-left side of the refrigerator door.

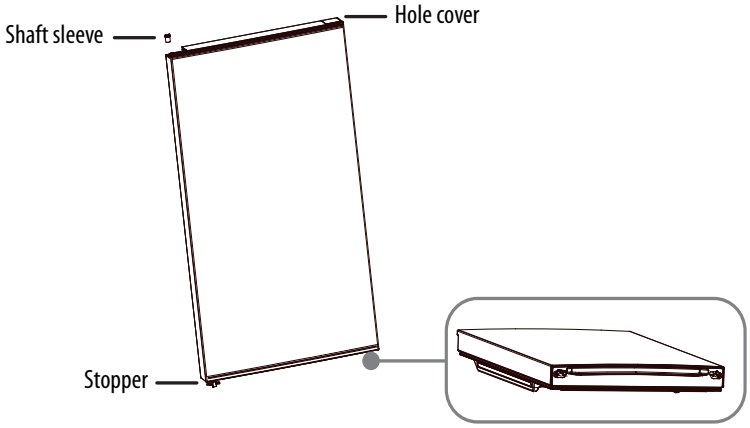

10 Remove the shaft sleeve from the top-right side of the freezer door, remove the hole cover from the top-left side of the freezer door, then remove the stopper from the bottom-right side of the freezer door.

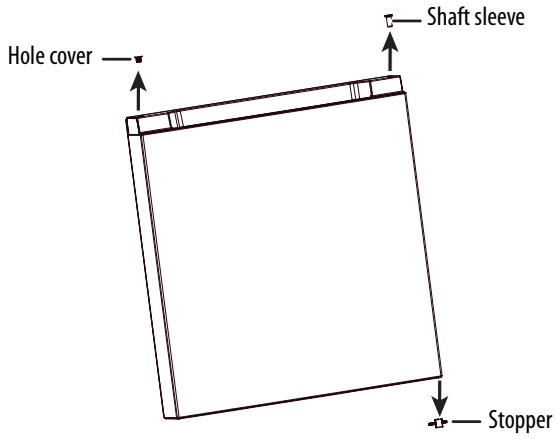

11 Install the hole cover in the top-right side of the freezer door, install the shaft sleeve in the top-left side of the door, then install the stopper into the bottom-left side of the freezer door.

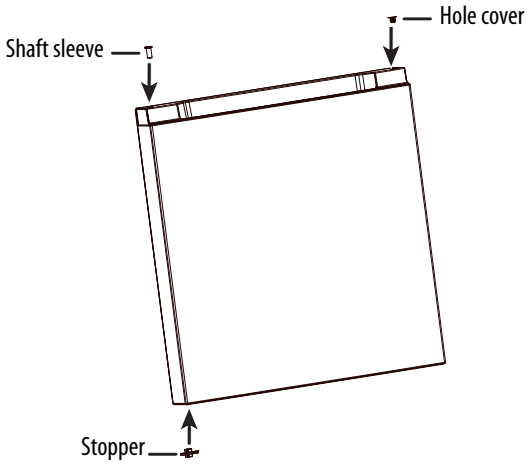

12 Install the freezer door on the lower hinge, then install the middle hinge on the middle-left side of the refrigerator and the hole cover on the middle-right side of the refrigerator.

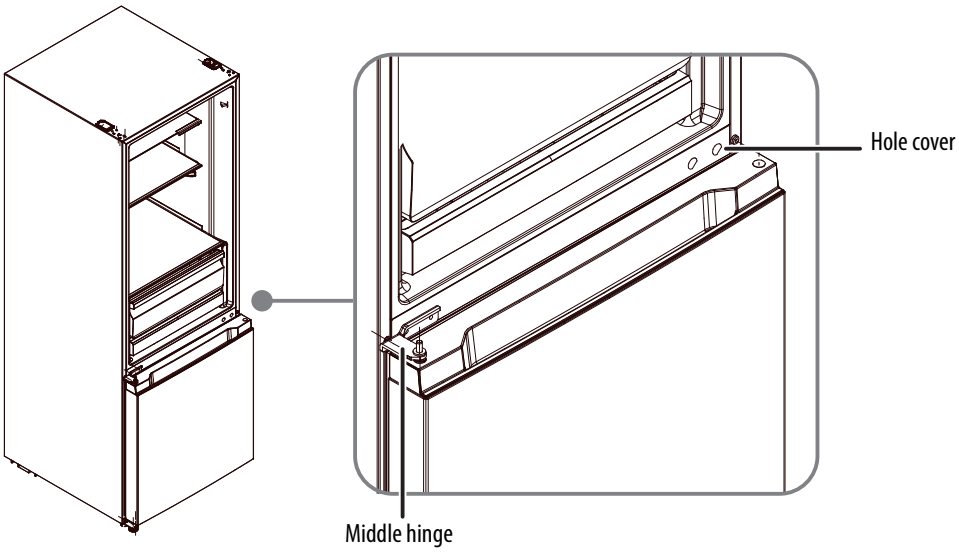

13 Remove the upper left hinge cover and upper left hinge from the accessory bag.

14 Install the refrigerated door onto the middle hinge, install the upper-left hinge and hinge cover, then install the decorative cover to the right side of the refrigerator.

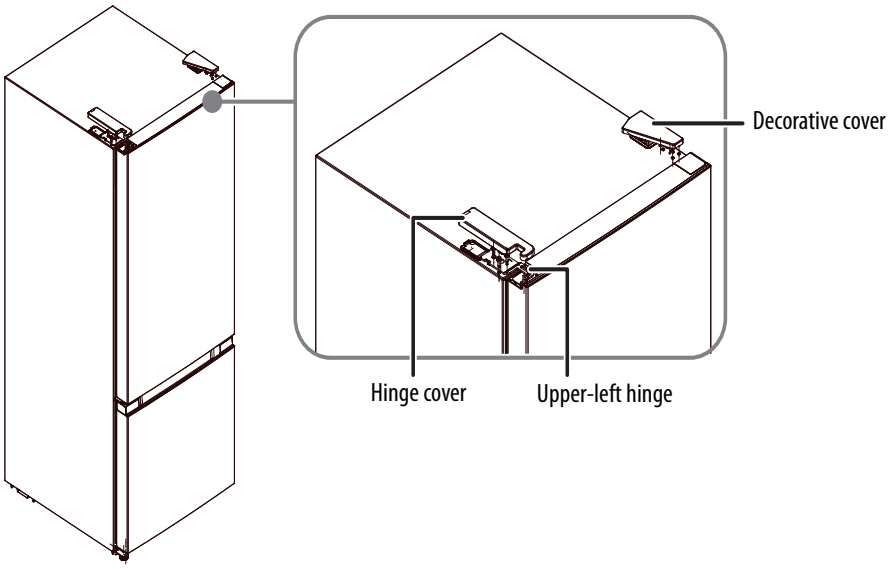

Using your refrigerator

CAUTIONS:
- If your refrigerator is set at a warmer setting (such as 1), depending on the ambient temperature, the freezer temperature may become too warm and the contents may defrost. If this happens, set the refrigerator temperature to the coldest setting (4).
- Internal temperatures can vary based on the location of your refrigerator, the ambient room temperature, and how often your open the doors.
- Do not store carbonated drinks in the freezer compartment. They may break and damage your refrigerator.
- Do not exceed the storage times recommended by the food manufacturers for any kind of food.

When you plug in your refrigerator for the first time, the temperature indicator LEDs turn on for three seconds, then your refrigerator runs at setting 2 (39.2° F (4° C)) by default.

Before storing foods in your refrigerator, turn on the refrigerator and freezer compartments, then wait for 24 hours to make sure that they are working correctly and to let both compartments reach the correct temperatures.

Setting the refrigerator temperature

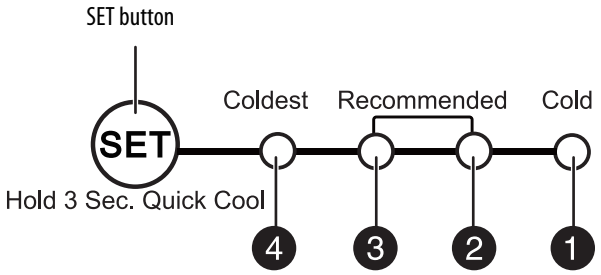

Note: The illustration above is only for reference. The actual temperature control configuration may be different on your refrigerator.

- Press the **SET** button one or more times to select a temperature setting. The LED indicator light for the selected setting turns on. If you do not press the **SET** button for five seconds, your refrigerator uses the selected setting.
- Settings are as follows:

LED	SETTING	TEMPERATURE
4	Coldest	35.6° F (2° C)
3	Recommended	37.4° F (3° C)
2	Recommended	39.2° F (4° C)
1	Cold	42.8° F (6° C)

The temperature settings cycle as follows: 1>2>3>4>1.

Fault codes and indicators

In case of a problem, a blinking LED on the display indicates the nature of the problem.

FAULT INDICATOR LED	PROBLEM DESCRIPTION	ACTION TO BE TAKEN
1	Ambient temperature sensor	Requires service by a qualified technician.
3	Refrigerator defrost sensor	Requires service by a qualified technician.
4	Refrigerator temperature sensor circuit	Requires service by a qualified technician.

Quick Cool mode

Quick cool mode helps to lower the temperature quickly.

1. Press and hold the **SET** button for three seconds. LEDs 2 and 3 turn on and the refrigerator enters quick cool mode.
2. To cancel quick cool mode, press the **SET** button again.

Setting the freezer temperature

The freezer temperature controller is located behind the fridge crisper, remove the crisper to gain access to the freezer controller when you need to adjust the freezer temperature.

- Slide the freezer temperature control slider to select a freezer temperature.
  For the coldest setting, slide the control slider to the left.

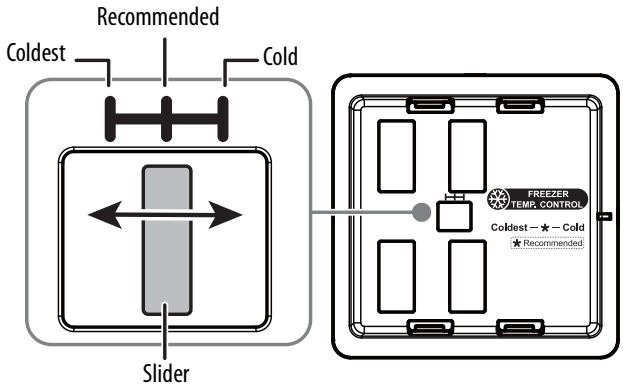

Removing and inserting the glass shelves

1. Lift the front half of the shelf up and lay it on the back of the shelf.

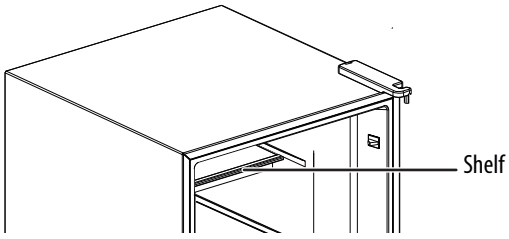

2. Lift up and pull the shelf out.

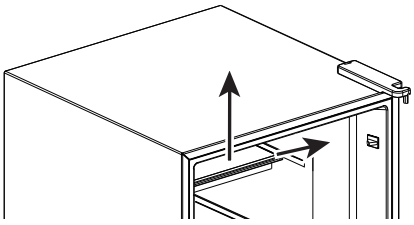

3. To replace the shelf, slide it into the compartment, then lower it into position.

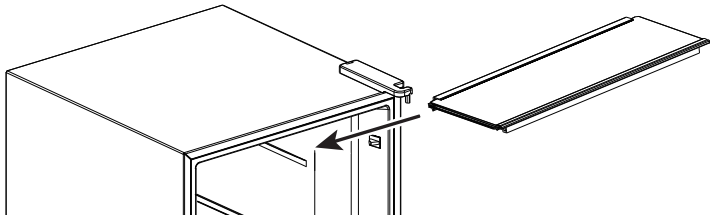

Adjusting the refrigerator shelves

The shelves inside the refrigerator and freezer compartments are adjustable.

1. Open the refrigerator or freezer compartment door all the way.

2 Lift a shelf, then pull it out.

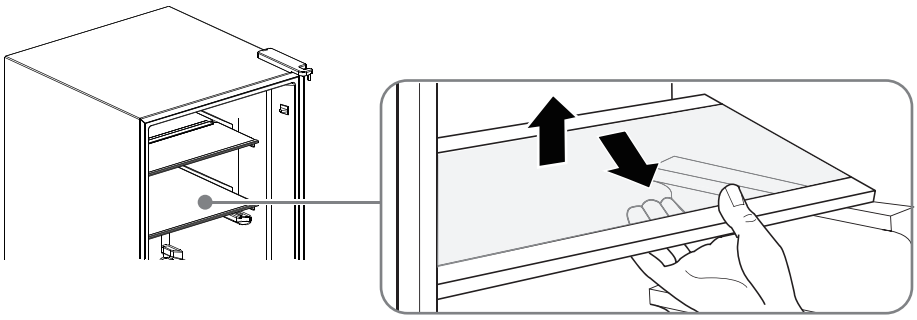

3 To replace a shelf, slide it into the compartment, then lower it into position.

Adjusting the door racks

CAUTION: Do not put too many heavy items in the door racks. You may break the racks.

The refrigerator and freezer compartments have door racks. You can adjust a rack to fit the items you want to store.

1 Remove all items from a rack.

2 Hold the door rack with one hand, then use the other hand to tap the bottom of the rack up several inches.

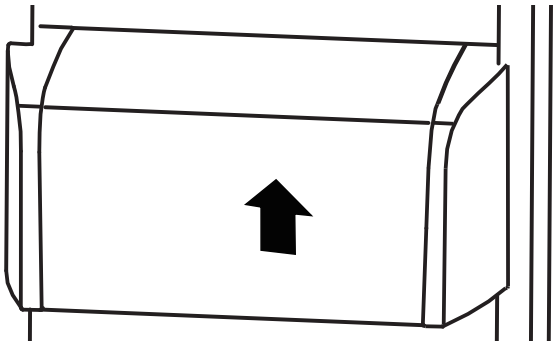

3 Remove the rack from the door.

4 To replace the rack, align the rack in the door, then press down to lock the rack in place. When the rack is locked in place, you hear a click.

Removing the crisper drawer

The crisper drawer is designed to store fruits and vegetables. Putting fruits and vegetables inside the crisper drawer helps avoid losing moisture and prevents flavor from getting into other foods.

1 Open the refrigerator compartment door all the way.

2 Lift the crisper drawer with its glass cover up, then pull the crisper drawer out.

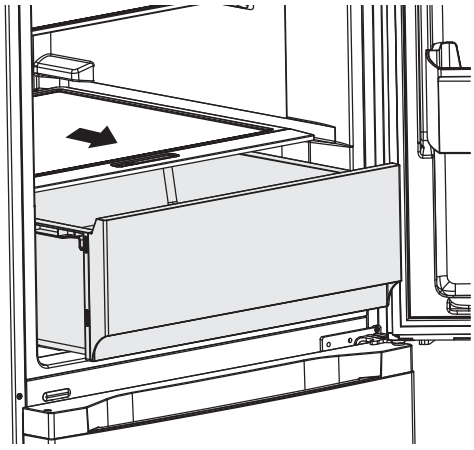

3 To replace the crisper drawer, slide it into the compartment, then lower it into position.

Maintaining your refrigerator

Cleaning your refrigerator

CAUTIONS:
To prevent damage to the finish:
- Do not use gasoline, benzine, thinner, or other similar solvents.
- Do not use abrasive cleaners.
- Do not use sharp objects because they are likely to scratch the surface.

We recommend that you do the following every time you clean your refrigerator to keep it running odor-free and efficiently:

1. Unplug your refrigerator from the power outlet.
2. Remove all food.
3. If you want to remove the door racks, shelves, crisper, freezer shelf, or freezer door racks, see:
   - Adjusting the door racks on page 16
   - Removing and inserting the glass shelves on page 15
   - Removing the crisper drawer on page 16
4. Clean the doors, handles, and cabinet surfaces with a mild detergent, then rinse with warm water using a wrung-out sponge or cloth.
5. Wash the inside with a damp warm cloth soaked in a solution of one quart of lukewarm water to two tablespoons of baking soda solution, then rinse with warm water using a wrung-out sponge or cloth.
6. Clean the baskets, shelves, and drawers with a mild detergent and soft cloth, then rinse with warm water.
7. Make sure that you keep the door gaskets (seals) clean so that the door seals tightly. This helps your refrigerator run efficiently.

CAUTION: Make sure that the door gaskets are completely dry before you plug your refrigerator into the power outlet.

8. Dry all surfaces and removable parts before putting them back into place.
9. Plug your refrigerator into the power outlet.

Defrosting your refrigerator

Your refrigerator is "frost-free" and does not require defrosting.

Shutting down your refrigerator for a long time (several months)

1. Turn off your refrigerator and unplug it from the wall outlet.
2. Remove all food.
3. Clean your refrigerator.
4. Leave the door open slightly to avoid possible formation of condensation, mold, or odor.

CAUTION: Use extreme caution with children. Do not let children play with your refrigerator.

Moving your refrigerator

1. Turn off your refrigerator and unplug it from the wall outlet.
2. Remove all food.
3. Securely tape down all loose items inside your refrigerator.
4. Tape the doors shut.
5. Make sure that your refrigerator stays in the upright position during transportation.

Tips on saving energy

- Locate your refrigerator in the coolest area of the room, away from heat producing appliances or heating ducts and out of direct sunlight.
- Let hot foods cool to room temperature before placing them in your refrigerator. Overloading your refrigerator forces the compressor to run longer.
- Wrap foods correctly and wipe containers dry before placing them in your refrigerator. This cuts down on frost build-up inside your refrigerator.
- Organize and label food to reduce door openings and extended searches.
- Do not use aluminum foil, wax paper, or paper towel to line shelves. Liners interfere with cold air circulation and make your refrigerator less efficient.

Tips on storing food

- Always store cooked meats on a refrigerator shelf above raw meats to avoid bacterial transfer. Keep raw meat on a plate which is large enough to collect juices, and cover the plate with cling film or foil. Leave space around food. This allows cold air to circulate around your refrigerator so that all parts of your refrigerator are kept cool.
- To prevent transfer of flavors and food drying out, wrap or cover each food item separately. Fruit and vegetables need not be wrapped.
- Let hot food cool down before placing it in the refrigerator or freezer compartment. Placing hot food in the fridge-freezer could spoil other food and lead to higher temperatures.
- To prevent cold air from escaping, try to limit the number of times you open the doors. When retuning from shopping, sort foods to be kept in the refrigerator compartment before opening the doors. Only open the door to put food in or take it out.
- Do not store food which goes bad easily at low temperature, such as bananas and melons.
- When storing food in the refrigerator compartment, use a container with a lid whenever possible. This prevents moisture from evaporating, and helps food keep its taste and nutrients.
- When storing food in the freezer compartment, wrap the food in polyethylene film, aluminum foil, or other types of freezer storage products
- Do not block air vents inside either compartment with food. Smooth circulation of cold air keeps the refrigerator and freezer temperatures even.
- Do not open the doors frequently. Opening the doors lets warm air enter the compartments and can cause the temperature to rise.
- To adjust the temperature control easily, do not store food near the temperature controls.
- Never keep too many foods in the door rack, because this may stop the door from fully closing.
- Do not store bottles in the freezer compartment. They may break when frozen.
- Do not refreeze food that has been thawed. This causes a loss of taste and nutrition.
- Store fruits and vegetables in the crisper to prevent excessive evaporation of water and freshness.
- Leave a small amount of “air space” when freezing liquids to allow for expansion.
- To make the best use of freezer space, freeze liquids (or solids with liquids, such as stew) in square blocks. Pour the liquid into a freezer bag placed inside a square-sided container and freeze it. When the liquid is frozen, remove the bag from the container and seal the bag.

Tips for shopping for frozen foods

- When you are buying frozen food, look at the storage guidelines on the packaging. Check the “Best Before” date. Do not use food that is past this date.
- Check the temperature of the frozen food cabinet in the shop where you buy your frozen foods.
- Make sure that the frozen food package is in perfect condition.
- Always buy frozen products last to avoid thawing while you shop.
- Keep frozen food together while shopping, and on the journey home to help to keep the food cooler.
- Don't buy frozen food unless you can freeze it straight away.
- When transporting frozen food, use special insulated bags that you can buy from most supermarkets and hardware shops. These keep frozen food cold for longer.
- Freeze food in small quantities. It freezes faster and takes less time to thaw.
- If you are freezing large amounts of fresh food, select a low temperature range. This will lower the temperature in the freezer so your food freezes faster. When the food is frozen, adjust the temperature back to its normal mode.

Troubleshooting

CAUTION: Do not try to repair your refrigerator yourself. Doing so invalidates the warranty.

PROBLEM	SOLUTION
My refrigerator does not work.	• Make sure that your refrigerator is securely plugged into a working outlet. • Make sure that your power source has the correct voltage. Your refrigerator's voltage rating is on a label on the back of your refrigerator. • Check the house fuse or circuit breaker box and replace the fuse or reset the circuit breaker.
The refrigerator compartment has a bad odor.	• Make sure that all food with a strong odor (like onions) is wrapped or stored in airtight packaging. • Certain containers and wrapping materials (such as paper, foil, or plastic) can cause odors. If you think this might be the case, try using different containers or a different brand of wrapping material. • Check for spoiled food and remove it. • Clean the inside of your refrigerator. See Cleaning your refrigerator on page 17.
The refrigerator doors do not close completely.	• Make sure that no food packages are in the way. • Make sure that the door gaskets (seals) are clean. See Cleaning your refrigerator on page 17. • If the door gasket does not seal, try heating then cooling the seal. You can use an electric hair dryer to heat the seal. • Make sure that your refrigerator is level. See Leveling your refrigerator on page 9. • If you have recently reversed the door hinge to switch the direction the door opens, double check the hinge installation for any misaligned or missing parts.
The temperature is too warm.	• You may have left the doors open too long or opened them too frequently. • Make sure that no obstacle is keeping the doors from closing correctly. • Adjust the refrigerator or freezer compartment temperature. See Setting the refrigerator temperature on page 14 or Setting the freezer temperature on page 15. • Your refrigerator may not have enough clearance from walls or the ceiling. See Providing correct ventilation on page 8.
The temperature is too cold.	• Adjust the refrigerator or freezer compartment temperature. See Setting the refrigerator temperature on page 14 or Setting the freezer temperature on page 15.
A layer of frost occurs in one of the compartments.	• A layer of frost may occur on the compartment's interior walls if the freezer is opened frequently or kept open too long. • Make sure that the air outlets are not blocked by food. • Make sure that the doors are fully closed.
The refrigerator door is hard to open or close.	• When you open the refrigerator door, warm air rushes inside. When you close the door, the warm air rushes to the condenser which causes a vacuum. This causes the door to be hard to open for about 10 to 15 seconds after closing. • If the door is hard to open at other times, try rubbing paraffin wax or petroleum jelly along the edges of the entire gasket. Paraffin wax is used for canning and is safe for use around food. • If the door is hard to close, try slightly loosening the tension on the door hinges.
The compressor runs for a long time or turns on and off frequently.	The compressor runs longer if: • The room temperature is high. • You just added a large amount of food. Wait for the food to freeze, then check again. • You open and close the door frequently. • The door gasket is dirty. Clean the gasket. See Cleaning your refrigerator on page 17. • Your refrigerator has been disconnected for a period of time. Wait for your refrigerator to cool (about four hours) before adding food. • You have the temperature set too low. • Make sure that the refrigerator has enough clearance on the sides and top. See Providing correct ventilation on page 8.

PROBLEM	SOLUTION
The refrigerator makes unusual noises or vibrations.	The following sounds are normal: • Compressor running noises. • Air movement noise from the small fan motor in the freezer compartment or other compartments. • Popping noise during automatic defrosting. • Clicking noise before the compressor starts. Other unusual noises or vibrations may occur: • If you have items on the top of your refrigerator. Remove the items. • If your refrigerator is not level. See Leveling your refrigerator on page 9. • If your refrigerator is touching walls. Move it away from the walls. • If the shelves or drawers are installed incorrectly.
The outside of the refrigerator is hot.	Heat dissipation from the condenser may make the outside feel hot. This is normal and happens if: • The room temperature is high. • You have too much food in your refrigerator. • You open and close the doors excessively.
Water condenses on the outside of the refrigerator.	• Condensation on the exterior surface and door seal is normal when the room humidity is high. • When you open the door, warm, moist outside air meets the cold dry air inside your refrigerator. This is normal.

Specifications

External dimensions (H × W× D)	67.8 × 23.4 × 27 in. (172.4 × 59.5 × 68.7 cm)
Internal dimensions (H × W× D)	**Refrigerator compartment (H × W × D)**: 37 x 21.6 x 21.2 in. (94 x 55 x 54 cm) **Freezer compartment (H × W × D):** 21.6 x 21 x 20 in. (55 x 53 x 51 cm) **Refrigerator shelf (W × D):** 18.8 x 15 in. (47.8 x 38 cm) **Upper Crisper (H × W × D):** 6.4 x 18.1 x 17.2 in. (16.2 x 46 x 43.8) **Lower Crisper (H x W x D):** 3 x 18 x 14.8 in. (7.5 x 45.7 x 37.5 cm) **Depth with open door at 90°:** 48.3 in. (122.6 cm)
Weight	**Gross Weight**: 141.1 lbs. (64 kg) **Net Weight**: 129 lbs. (58.5 kg)
Temperature ranges	**Refrigerator**: 34° F to 50° F (1° C to 10° C) **Freezer**: -11° F to 10° F (-24° to -12° C)
Ambient operating temperatures	50° F to 110° F (10° C to 43° C)
Power requirements	AC115 V~60 Hz
Current	2.5 A
Defrosting power	170 W
Power cord length	65 in. (165 cm)
Power consumption per year	395 Kwh
Certifications	UL

WARNING: This product can expose you to chemicals including arsenic, which is known to the State of California to cause cancer. For more information, go to www.P65Warnings.ca.gov.

ONE-YEAR LIMITED WARRANTY

Definitions:

The Distributor* of Insignia branded products warrants to you, the original purchaser of this new Insignia-branded product ("Product"), that the Product shall be free of defects in the original manufacturer of the material or workmanship for a period of one (1) year from the date of your purchase of the Product ("Warranty Period").

For this warranty to apply, your Product must be purchased in the United States or Canada from a Best Buy branded retail store or online at www.bestbuy.com or www.bestbuy.ca and is packaged with this warranty statement.

How long does the coverage last?

The Warranty Period lasts for 1 year (365 days) from the date you purchased the Product. Your purchase date is printed on the receipt you received with the Product.

What does this warranty cover?

During the Warranty Period, if the original manufacture of the material or workmanship of the Product is determined to be defective by an authorized Insignia repair center or store personnel, Insignia will (at its sole option): (1) repair the Product with new or rebuilt parts; or (2) replace the Product at no charge with new or rebuilt comparable products or parts. Products and parts replaced under this warranty become the property of Insignia and are not returned to you. If service of Products or parts are required after the Warranty Period expires, you must pay all labor and parts charges. This warranty lasts as long as you own your Insignia Product during the Warranty Period. Warranty coverage terminates if you sell or otherwise transfer the Product.

How to obtain warranty service?

If you purchased the Product at a Best Buy retail store location or from a Best Buy online website (www.bestbuy.com or www.bestbuy.ca), please take your original receipt and the Product to any Best Buy store. Make sure that you place the Product in its original packaging or packaging that provides the same amount of protection as the original packaging.

To obtain warranty service, in the United States and Canada call 1-877-467-4289. Call agents may diagnose and correct the issue over the phone.

Where is the warranty valid?

This warranty is valid only in the United States and Canada at Best Buy branded retail stores or websites to the original purchaser of the product in the country where the original purchase was made.

What does the warranty not cover?

This warranty does not cover:

- Food loss/spoilage due to failure of refrigerator or freezer
- Customer instruction/education
- Installation
- Set up adjustments
- Cosmetic damage
- Damage due to weather, lightning, and other acts of God, such as power surges
- Accidental damage
- Misuse
- Abuse
- Negligence
- Commercial purposes/use, including but not limited to use in a place of business or in communal areas of a multiple dwelling condominium or apartment complex, or otherwise used in a place of other than a private home.
- Modification of any part of the Product, including the antenna
- Display panel damaged by static (non-moving) images applied for lengthy periods (burn-in).
- Damage due to incorrect operation or maintenance
- Connection to an incorrect voltage or power supply
- Attempted repair by any person not authorized by Insignia to service the Product
- Products sold "as is" or "with all faults"
- Consumables, including but not limited to batteries (i.e. AA, AAA, C etc.)
- Products where the factory applied serial number has been altered or removed
- Loss or Theft of this product or any part of the product
- Display panels containing up to three (3) pixel failures (dots that are dark or incorrectly illuminated) grouped in an area smaller than one tenth (1/10) of the display size or up to five (5) pixel failures throughout the display. (Pixel based displays may contain a limited number of pixels that may not function normally.)
- Failures or Damage caused by any contact including but not limited to liquids, gels or pastes.

REPAIR REPLACEMENT AS PROVIDED UNDER THIS WARRANTY IS YOUR EXCLUSIVE REMEDY FOR BREACH OF WARRANTY. INSIGNIA SHALL NOT BE LIABLE FOR ANY INCIDENTAL OR CONSEQUENTIAL DAMAGES FOR THE BREACH OF ANY EXPRESS OR IMPLIED WARRANTY ON THIS PRODUCT, INCLUDING, BUT NOT LIMITED TO, LOST DATA, LOSS OF USE OF YOUR PRODUCT, LOST BUSINESS OR LOST PROFITS. INSIGNIA PRODUCTS MAKES NO OTHER EXPRESS WARRANTIES WITH RESPECT TO THE PRODUCT, ALL EXPRESS AND IMPLIED WARRANTIES FOR THE PRODUCT, INCLUDING BUT NOT LIMITED TO ANY IMPLIED WARRANTIES OF AND CONDITIONS OF MERCHANTABILITY AND FITNESS FOR A PARTICULAR PURPOSE, ARE LIMITED IN DURATION TO THE WARRANTY PERIOD SET FORTH ABOVE AND NO WARRANTIES, WHETHER EXPRESS OR IMPLIED, WILL APPLY AFTER THE WARRANTY PERIOD. SOME STATES, PROVINCES AND JURISDICTIONS DO NOT ALLOW LIMITATIONS ON HOW LONG AN IMPLIED WARRANTY LASTS, SO THE ABOVE LIMITATION MAY NOT APPLY TO YOU. THIS WARRANTY GIVES YOU SPECIFIC LEGAL RIGHTS, AND YOU MAY ALSO HAVE OTHER RIGHTS, WHICH VARY FROM STATE TO STATE OR PROVINCE TO PROVINCE.

Contact Insignia:

1-877-467-4289

www.insigniaproducts.com

INSIGNIA is a trademark of Best Buy and its affiliated companies.

*Distributed by Best Buy Purchasing, LLC

7601 Penn Ave South, Richfield, MN 55423 U.S.A.

©2021 Best Buy. All rights reserved

INSIGNIA™

For product inquiries, please contact us with the information below:
1-877-467-4289
www.insigniaproducts.com
INSIGNIA is a trademark of Best Buy and its affiliated companies.
Distributed by Best Buy Purchasing, LLC
©2021 Best Buy. All rights reserved.

V2 ENGLISH
21-0536