LG
Life's Good

ENGLISH

OWNER'S MANUAL

FRENCH DOOR REFRIGERATOR

Please read this guide thoroughly before operating and keep it handy for reference at all times.

LFC28768**

MFL68680415
Rev.02_170117

www.lg.com

Copyright © 2014 - 2017 LG Electronics Inc. All Rights Reserved.

INTRODUCTION

IMPORTANT SAFETY INFORMATION

Basic Safety Precautions 3
CFC Disposal 4
How to Connect Electricity 5

PARTS AND FEATURES

Special Features 6
Key Parts and Components 7

INSTALLATION

Choose the Proper Location 8
Clearances 8
Flooring 9
Handle Removal.....9
Refrigerator Door and Freezer Drawer Removal ..10
Light Replacement 15
Connecting the Water Supply 16
Connecting the Water Lines.....17
Leveling the Refrigerator Doors 18
Starting.....19

HOW TO USE

Setting The Controls 20
Automatic Icemaker 21
Storing Foods 22
Location of Foods 23
Shelf Height Adjustment 24
Removing and Replacing Components 25

CARE AND CLEANING

Cleaning the Refrigerator 27
General Information 27

SMART DIAGNOSIS

Smart Diagnosis 28

TROUBLESHOOTING

Before Calling for Service 29

SPECIFICATIONS

Key Dimensions and Specifications 33

WARRANTY

Product Registration Information 34

THANK YOU!

Congratulations on your purchase and welcome to the LG family. Your new LG French Door Refrigerator combines advanced cooling technology with simple operation and high efficiency. Follow the operating and care instructions in this manual and your refrigerator will provide you with many years of reliable service.

BASIC SAFETY PRECAUTIONS

This guide contains many important safety messages. Always read and obey all safety messages.

⚠ This is the safety alert symbol. It alerts you to safety messages that inform you of hazards that can kill or hurt you or others or cause damage to the product. All safety messages will be preceded by the safety alert symbol and the hazard signal word DANGER, WARNING, or CAUTION. These words mean:

⚠DANGER You **might** be killed or seriously injured if you don't follow instructions.

⚠WARNING You **can** be killed or seriously injured if you don't follow instructions.

⚠CAUTION Indicates an imminently hazardous situation which, if not avoided, **may** result in minor or moderate injury, or product damage.

All safety messages will identify the hazard, tell you how to reduce the chance of injury, and tell you what can happen if the instructions are not followed.

⚠WARNING:

To reduce the risk of fire, electric shock, or injury to persons when using your product, basic safety precautions should be followed, including the following.

Read all instructions before using this appliance.

- NEVER unplug your refrigerator by pulling on the power cord. Always grip the plug firmly and pull it straight out from the outlet.
- If the supply cord is damaged, it must be replaced by the manufacturer or its service agentor a similarly qualified person in order to avoid a hazard. Do not use a cord that shows cracks or abrasion damage along its length or at either the plug or connector end.
- When moving your refrigerator away from the wall, be careful not to roll over or damage the power cord.
- DO NOT store or use gasoline or other flammable vapors and liquids in the vicinity of this or any other appliance.
- DO NOT allow children to climb, stand, or hang on the refrigerator doors or shelves in the refrigerator. They could damage the refrigerator and seriously injure themselves.
- Keep fingers out of pinch point areas; clearances between the doors and cabinet are necessarily small. Be careful closing doors when children are in the area.
- Unplug your refrigerator before cleaning or making any repairs.
  NOTE: Service should be performed by a qualified technician.
- Before replacing a burned-out light bulb, unplug the refrigerator or turn off power at the circuit breaker or fuse box in order to avoid contact with a live wire filament. (A burned-out light bulb may break when being replaced.)
  NOTE: Some models have LED interior lighting and service should be performed by a qualified technician.
  NOTE: Setting either or both controls to the OFF position does not remove power to the light circuit.
- When you are finished, reconnect the refrigerator to the electrical source and reset the control (Thermostat Refrigerator Control, or Freezer Control, or Freezer Control, depending on the model) to the desired setting.
- This refrigerator must be properly installed in accordance with the **Installer Instructions** that were taped to the front of the refrigerator.
- After your refrigerator is in operation, do not touch the cold surfaces in the freezer compartment when hands are damp or wet. Skin may adhere to the extremely cold surfaces.
- In refrigerators with automatic icemakers, avoid contact with the moving parts of the ejector mechanism or with the heating element that releases the cubes. DO NOT place fingers or hands on the automatic icemaking mechanism while the refrigerator is plugged in.
- **Do not modify or extend the power cord length.** It will cause electric shock or fire.
- If connected to a circuit protected by fuses, use a time delay fuse.

⚠ **WARNING:** This product contains chemicals known to the State of California to cause cancer and birth defects or other reproductive harm. ***Wash hands after handling.***

BASIC SAFETY PRECAUTIONS (CONT.)

- Do not use drier to dry the inside, nor light a candle to remove odor.
- Install in places away from the fire such as the place where flammable gas is leaked.
- This appliance is not intended for use by persons (including children) with reduced physical, sensory or mental capabilities, or lack of experience and knowledge, unless they have been given supervision or instruction concerning use of the appliance by a person responsible for their safety.

  Children should be supervised to ensure that they do not play with the appliance.
- DO NOT refreeze frozen foods which have thawed completely. The United States Department of Agriculture in Home and Garden Bulletin No. 69 says:

  …You may safely refreeze frozen foods that have thawed if they still contain ice crystals or if they are still cold—below 40°F (4°C).

  …Thawed ground meats, poultry, or fish that have any off-odor or off-color should not be refrozen and should not be eaten. Thawed ice cream should be discarded. If the odor or color of any food is poor or questionable, dispose of it. The food may be dangerous to eat.

  Even partial thawing and refreezing reduces the quality of foods, particularly fruits, vegetables, and prepared foods. The eating quality of red meats is affected less than that of many other foods. Use refrozen foods as soon as possible to save as much of their quality as you can.

Risk of Child Entrapment

Discarded or abandoned refrigerators are dangerous, even if they will sit for just a few days. If you are disposing of your old refrigerator, please follow the instructions below to help prevent accidents.

Before you throw away your old refrigerator or freezer:

- Take off the doors.
- Leave the shelves in place so that children may not easily climb inside.

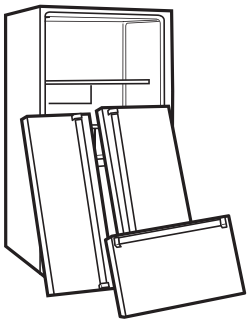

CFC DISPOSAL

Your old refrigerator may have a cooling system that used CFCs (chlorofluorocarbons). CFCs are believed to harm stratospheric ozone.

If you are throwing away your old refrigerator, make sure the CFC refrigerant is removed for proper disposal by a qualified servicer. If you intentionally release this CFC refrigerant, you can be subject to fines and imprisonment under provisions of environmental legislation.

HOW TO CONNECT ELECTRICITY

IMPORTANT: Please read carefully.

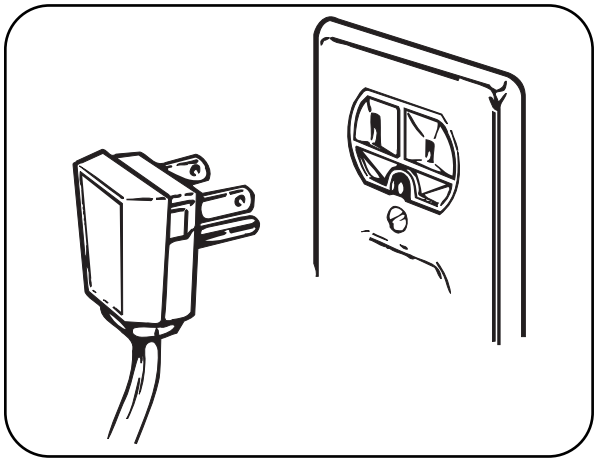

⚠WARNING

Electrical Shock Hazard

For personal safety, this appliance must be properly grounded. Have the wall outlet and the circuit checked by a qualified electrician to make sure the outlet is properly grounded.

RECOMMENDED GROUNDING METHOD

The refrigerator should always be plugged into its own individual properly grounded electrical outlet rated for 120 volts, 60 Hz, AC only, and fused at 20 amperes. This provides the best performance and also prevents overloading house wiring circuits which could cause a fire hazard from overheated wires. It is recommended that a separate circuit serving only this appliance be provided.

Use a receptacle which cannot be turned off with a switch or pull chain. Do not use an extension cord. Where a standard two-prong wall outlet is encountered, it is your personal responsibility and obligation to have it replaced with a properly grounded three-prong wall outlet.

Do not, under any circumstances, cut or remove the third (ground) prong from the power cord.

Do not use an adapter plug.

NOTE: Some models have LED interior lighting and service should be performed by a qualified technician.

When you are finished, reconnect the refrigerator to the electrical source and reset the control (Thermostat, Refrigerator Control, or Freezer Control, depending on the model) to the desired setting.

USE OF EXTENSION CORDS

Because of potential safety hazards under certain conditions, we strongly recommend against the use of an extension cord.

However, if you still elect to use an extension cord, it is absolutely necessary that it be a UL-listed (USA), 3-wire grounding-type appliance extension cord having a grounding-type plug and outlet and that the electrical rating of the cord be 20 amperes (minimum) and 120 volts.

Use of an extension cord will increase the clearance needed for the back of the refrigerator.

SAVE THESE INSTRUCTIONS

PARTS AND FEATURES

SPECIAL FEATURES

❶ CONTROL PANEL LED DISPLAY SCREEN

Simple electronic controls are user-friendly. The LED screen shows refrigerator and freezer temperatures, displays water filter status, dispenser information, and more.

❷ ICE PLUS

When this feature is activated, the freezer section will run at the coldest temperature for a 24- hour period to increase ice production.

❸ DOOR ALARM

A warning alarm sounds at 30-second intervals when the refrigerator or freezer door is left open for more than 60 seconds.

❹ CRISPERS

LG's crispers preserve humidity and help vegetables stay crisp.

❺ GLIDE'N'SERVE

Provides storage space with a variable temperature control that keeps the compartment colder than refrigerator.

❻ Mullion

Folds in when the left door is opened.

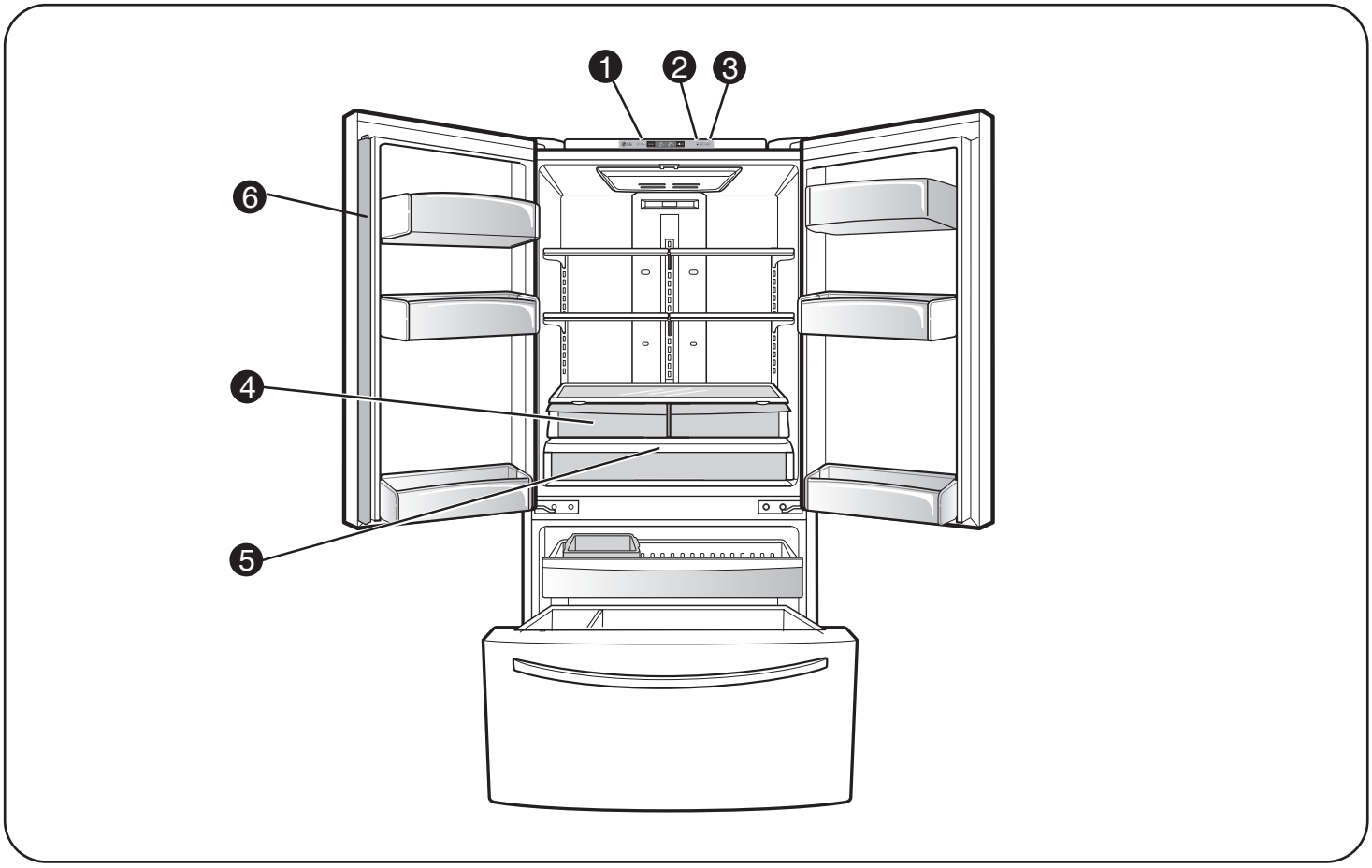

NOTE: This guide covers several different models.
The refrigerator you have purchased may have some or all of the items listed below.
The locations of the features shown below may not match your model.

KEY PARTS AND COMPONENTS

In addition to the special features and components outlined in the **Special Features** section, there are several other important components that are referenced in this manual.

❶ ADJUSTABLE REFRIGERATOR SHELVING

The refrigerator compartment shelves are adjustable to allow flexibility for storage needs.

❷ GALLON STORAGE BINS

Three interchangeable bins can be arranged to suit your storage needs.

❸ REMOVABLE ICE STORAGE BIN

The ice storage bin can be removed to fill ice buckets, coolers, or pitchers.

❹ LED INTERIOR LAMPS

Refrigerator interior is lit by the LED array.

❺ FIXED DOOR BINS

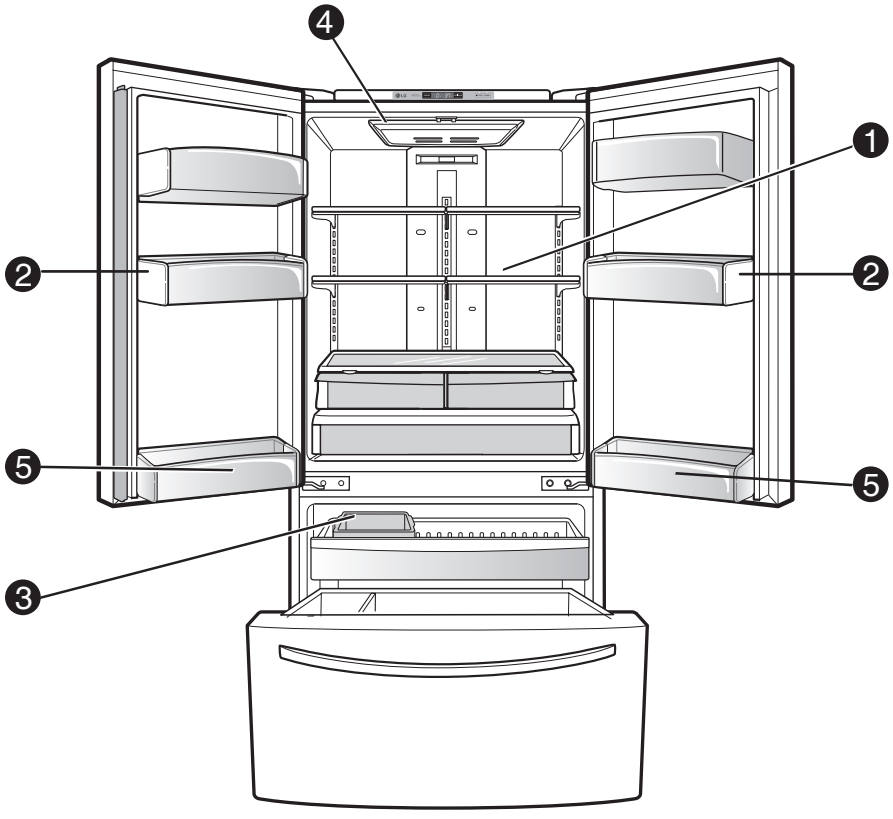

CHOOSE THE PROPER LOCATION

⚠WARNING

Excessive Weight Hazard

Two or more people are required when moving and unpacking the appliance.

- Store and install the refrigerator where it will not be exposed to temperatures below freezing or exposed to outdoor weather conditions.
- Install this appliance in an area where the temperature is between 55°F (13°C) and 110°F (43°C). If the temperature around the appliance is too low or too high, cooling ability may be adversely affected.
- If this refrigerator is installed where the temperature is above 110°F (43°C), the freezing capacity is compromised and the cost of electricity used increases.
- To reduce the risk of electric shock, do not install the refrigerator in a wet or damp area.
- Select a place where a water supply can be easily connected for the automatic icemaker and dispenser.
- Unstable installation may cause vibration and noise. If the floor is not even, make the refrigerator level by rotating the height adjusting screws.
- Properly ground the refrigerator to conform with all governing codes and ordinances.

⚠CAUTION

Avoid placing the unit near heat sources, direct sunlight, or moisture.

CLEARANCES

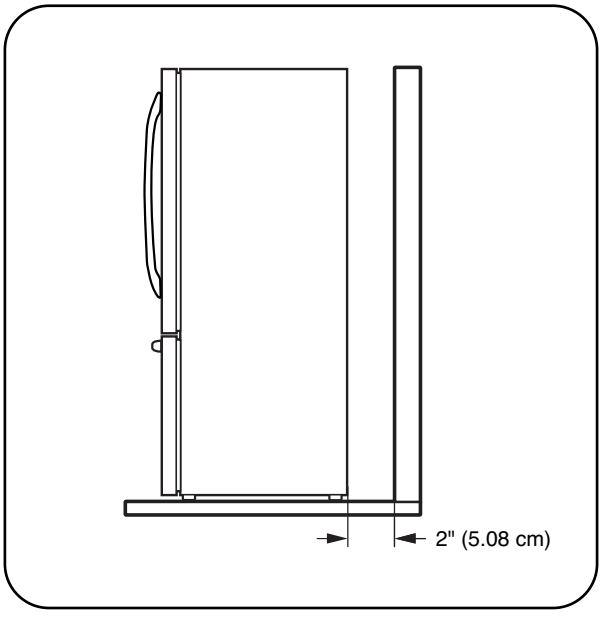

- Too small a distance from adjacent items may result in lowered freezing capability and increased electricity consumption charges. Allow at least 24 in. (61 cm) in front of the refrigerator to open the doors.

NOTE: For complete dimensions and specifications, see page 33.

FLOORING

- To minimize noise and vibration, the refrigerator MUST be installed on a solidly constructed floor.
- To avoid vibration, the unit must be level. If required, adjust the leveling legs to compensate for unevenness of the floor. The front should be slightly higher than the rear to aid in door closing. The leveling legs can be turned easily by pushing against the top of the refrigerator to take the weight off the feet. Turn the leveling legs clockwise to raise the unit or counterclockwise to lower it.
- Carpeting and soft tile surfaces are not recommended.
- Never install the refrigerator on a platform or weakly supported structure.

NOTE: When moving the refrigerator for cleaning or service, be sure to protect the floor. Always pull the refrigerator straight out when moving it.

Do not wiggle or walk the refrigerator when trying to move it; floor damage could occur.

NOTE: It is recommend that the doors be removed when it is necessary to move the refrigerator through a narrow opening.

HANDLE REMOVAL

To move the refrigerator through a house door, it may be necessary to remove the refrigerator door handles.

NOTE: Handle appearance may vary from illustrations on this page.

⚠CAUTION

- Use special care when removing handles to prevent scratching the doors.
- The handle could be damaged if you hit it with a hammer while removing or attaching.
- When you assemble or disassemble a handle, you must push or pull with reasonable force.

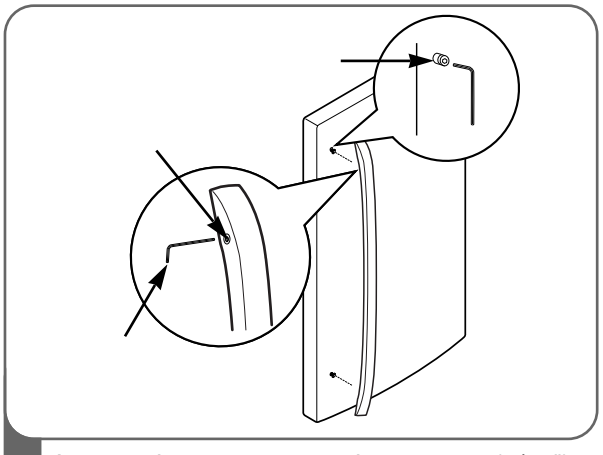

1 Loosen the set screws with a 2.5 mm (3/32") Allen wrench and remove the handle.

NOTE: If the handle mounting fasteners need to be tightened or removed, use a 1/4" Allen wrench.

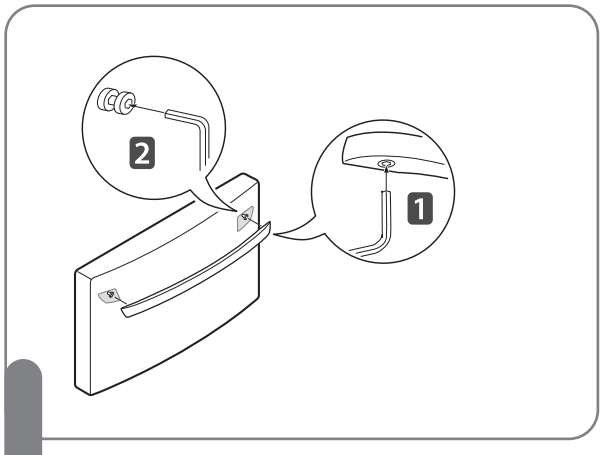

2

1 Loosen the set screws 1 located on the lower side of the handle with a 1/8 in. Allen wrench and remove the handle.

2 Loosen the mounting fasteners 2 that connect to the freezer drawer and handle using a 1/4 in. Allen wrench, and remove the mounting fasteners.

HANDLE REMOVAL (CONT.)

HANDLE REINSTALLATION

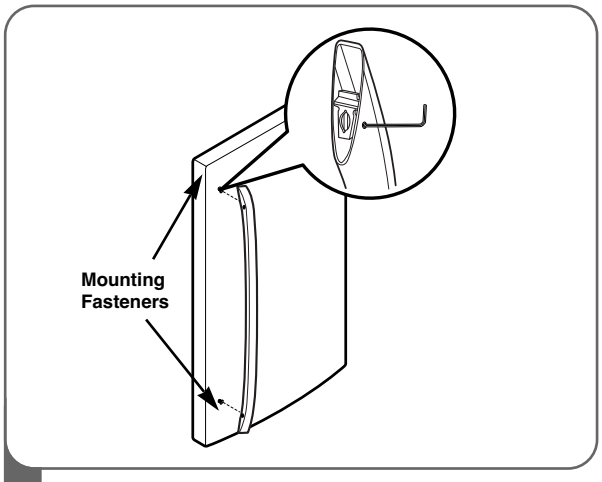

1 Place the handle on the door by aligning handle footprints to fit mounting fasteners and tighten the set screws with a 2.5 mm (3/32") Allen wrench.

NOTE: If the handle mounting fasteners need to be tightened or removed use a 1/4" Allen wrench

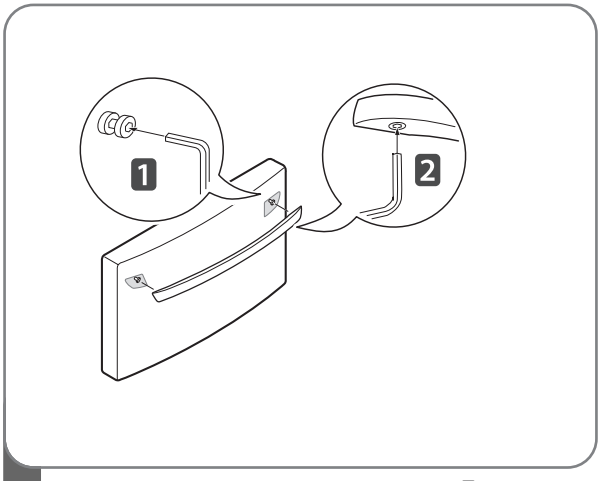

2
1 Assemble the mounting fasteners 1 at both ends of the handle using a 1/4 in. Allen wrench.
2 Place the handle on the door by fitting the handle footprints over the mounting fasteners and tightening the set screws 2 with a 1/8 in. Allen wrench.

⚠WARNING

When the customer takes apart the handle or assemble it from a refrigerator, please be cautious of following things.

- Hold the handle with your own hand to make sure not to drop the handle to the floor or instep while taking apart the handle from a refrigerator.
- Do not swing the handle towards people or animals after taking apart the handle.
- Insert the bracket hole of the handle into the stopper bolt of the door exactly, and then assemble the set screws to fix the handle.
- Check if there's any gap between the door and handle after fixing the handle.

REFRIGERATOR DOOR AND FREEZER DRAWER REMOVAL

REFRIGERATOR DOOR REMOVAL

⚠WARNING

Electric Shock Hazard

- Disconnect electrical supply to the refrigerator before installing. Failure to do so could result in death or serious injury.
- Do not put hands or feet or metal sticks into the air vents, base grille, or bottom of the refrigerator. You may be injured or receive an electrical shock.
- Be careful when you work with the hinge, base grille, and stopper. You may be injured.

Before you begin, remove food and bins from the doors. If your entrance door is too narrow for the refrigerator to pass through, remove the refrigerator door and move the refrigerator sideways through the doorway.

REFRIGERATOR DOOR AND FREEZER DRAWER REMOVAL (CONT.)

REFRIGERATOR DOOR REMOVAL (CONT.)

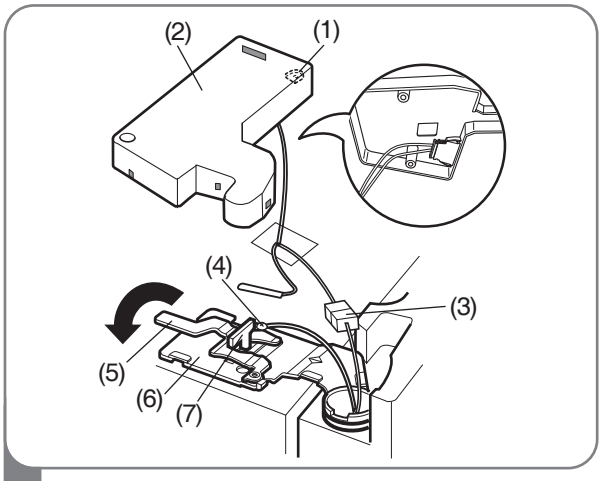

1 **To remove the left refrigerator door:**

- Open the door. Remove the top hinge cover screw (1).
- Use a flat blade screwdriver to lift the tabs on the front underside of the cover(2). Lift up the cover.
- Disconnect all the wire harnesses (3).
- Remove the grounding screw(4).
- Rotate hinge lever (5) counterclockwise. Lift the top hinge (6) free of the hinge lever latch (7).

IMPORTANT: When lifting the hinge free of the latch, be careful that the door does not fall forward.

- Lift the door from the middle hinge pin and remove the door.
- Place the door, inside facing up, on a non-scratching surface.

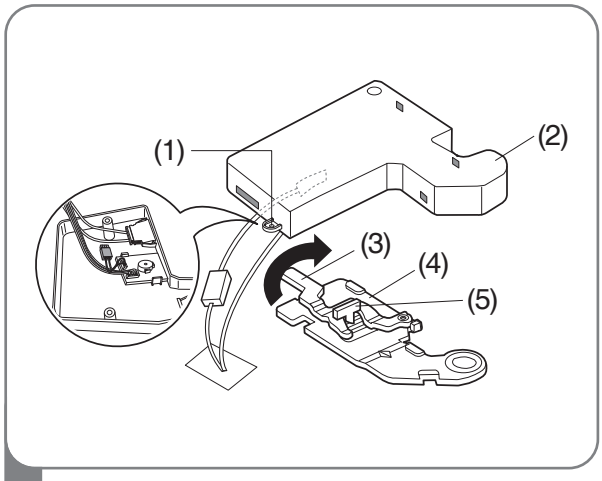

2 **To remove the right refrigerator door:**

- Open the door. Remove the top hinge cover screw (1).
- Use a flat blade screwdriver to lift the tabs on the front underside of the cover(2). Lift up the cover.
- Rotate hinge lever (3) clockwise. Lift the top hinge (4) free of the hinge lever latch (5).

IMPORTANT: When lifting the hinge free of the latch, be careful that the door is heavy and may fall forward.

- Lift the door from the middle hinge pin and remove the door.
- Place the door, inside facing up, on a non-scratching surface.

REFRIGERATOR DOOR AND FREEZER DRAWER REMOVAL (CONT.)

REFRIGERATOR DOOR REINSTALLATION

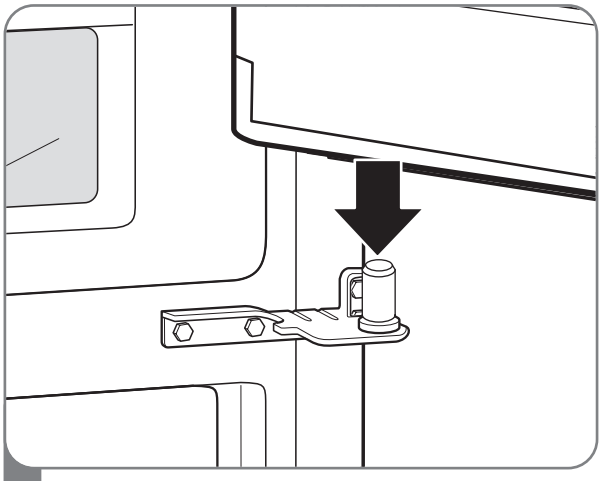

1 Install the right-side door first.

- Lower the door onto the middle hinge pin as shown.
- Make sure the plastic sleeve is inserted in the bottom of the door.

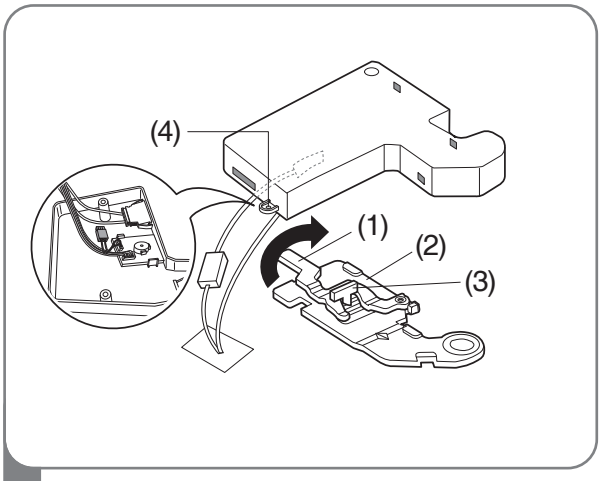

2
- Fit the top hinge (1) over the hinge lever latch (2) and into place. Rotate the lever (3) counterclockwise to secure the hinge.
- Insert and tighten the cover screw (4).

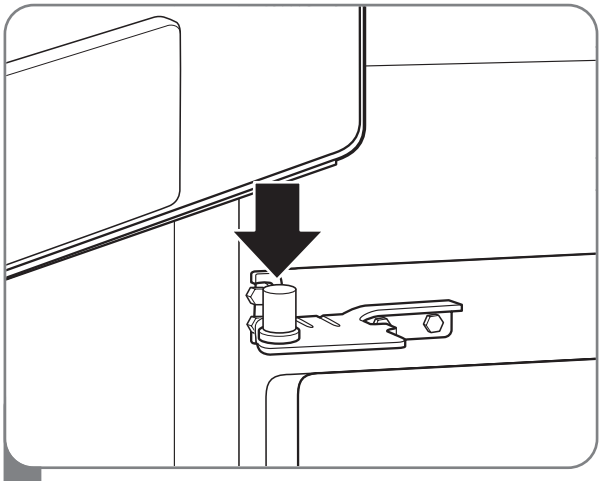

3 Install the left-side door.

- Lower the door onto middle hinge pin.

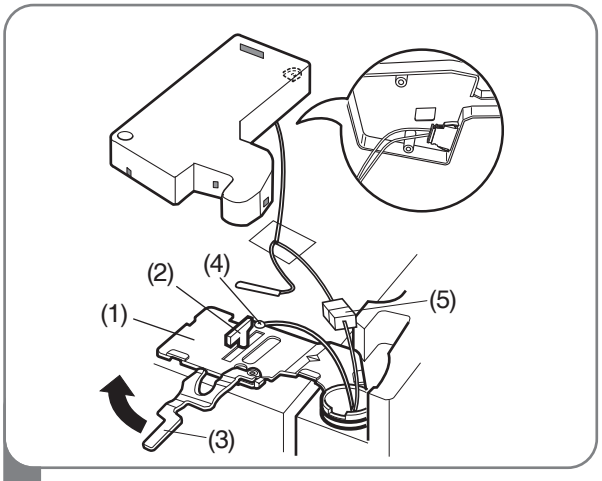

4
- Fit the top hinge (1) over the hinge lever latch (2) and into place. Rotate the lever (3) clockwise to secure the hinge.
- Install the grounding screw (4) and connect all the wire harnesses (5).

REFRIGERATOR DOOR AND FREEZER DRAWER REMOVAL (CONT.)

FREEZER DRAWER REMOVAL

CAUTION

- Care should be taken to avoid product or property damage when removing the freezer door. It maybe necessary to have assistance with the following insturctions.
- To avoid damage do not hold the handle when removing the door. It could come off and cause and injury.

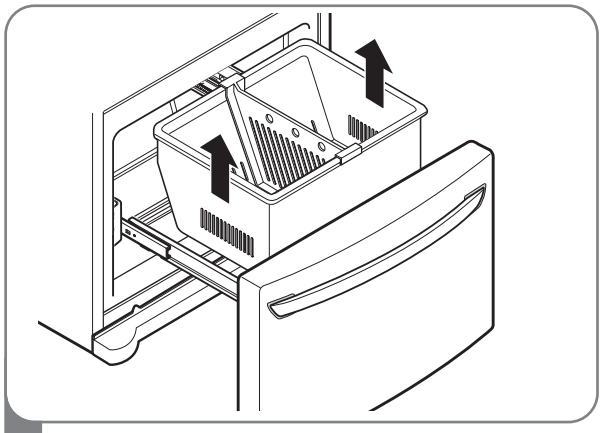

1 Fully extend the freezer drawer. Lifting up and out to remove the Dura Base basket making sure to clear the rail system.

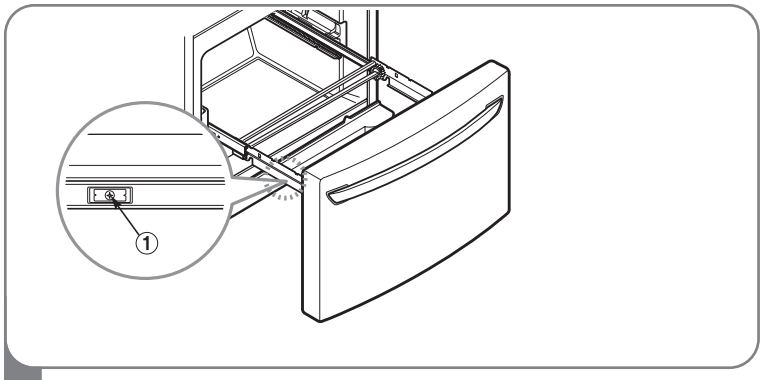

2 Remove one white screw ① on each side of the rails.

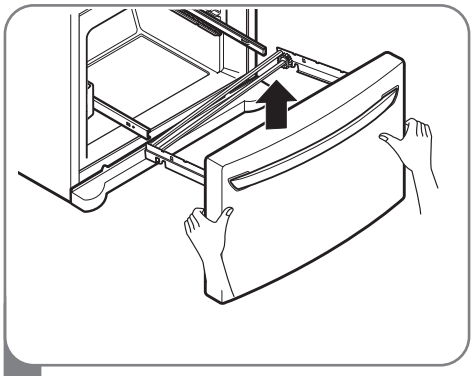

3 Holding both sides of the door pull up to separate the door from the rails.

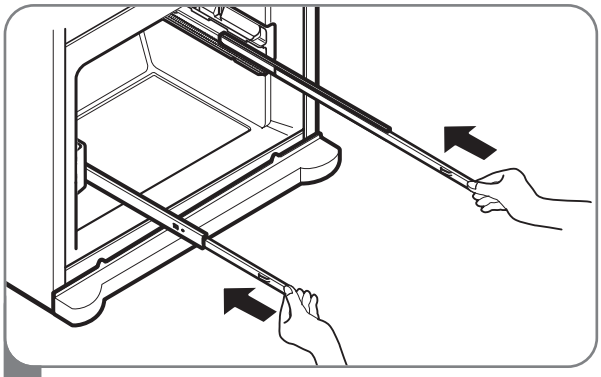

4 With both hands, hold each rail and push it in to allow both rails to slide in simultaneously.

⚠ CAUTION

Do not hold the handle when removing or replacing the drawer. The handle may come off and it could cause personal injury.

CAUTION: When you remove the drawer, do not hold the handle. If it may come off and it could cause personal injury.

CAUTION: When placing the drawer on the floor, care should be taken to avoid floor damage.

REFRIGERATOR DOOR AND FREEZER DRAWER REMOVAL (CONT.)

FREEZER DRAWER REINSTALLATION

⚠ CAUTION

- To avoid possible injury or product or property damage, you will need two people to perform the following instructions. It maybe necessary to have assistance with the following instructions.

⚠ WARNING

Risk of Child Entrapment

- To prevent accidental child and pet entrapment or suffocation risk, DO NOT allow them to play inside of the freezer drawer.
- DO NOT step or sit on the freezer drawer.

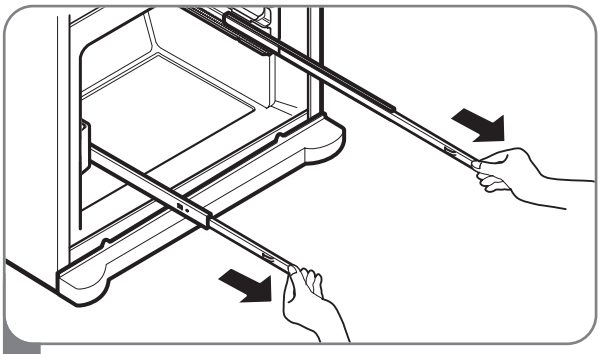

1 With both hands, pull out each rail simultaneously until both rails are fully extended.

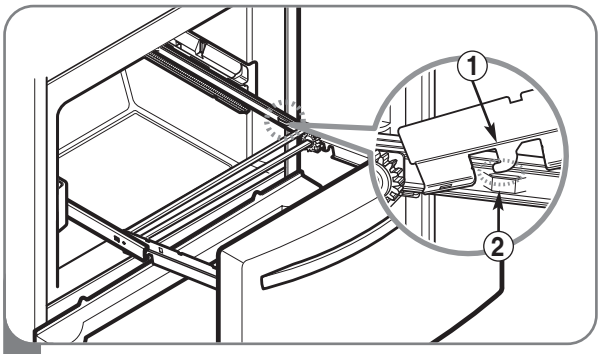

2 Hook door supports (1) into rail tabs (2).

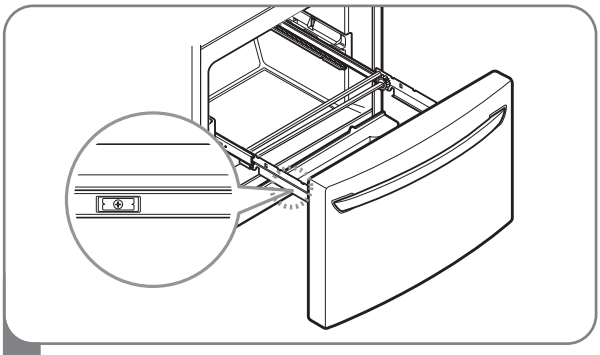

3 Lower door into final position and tighten the screws.

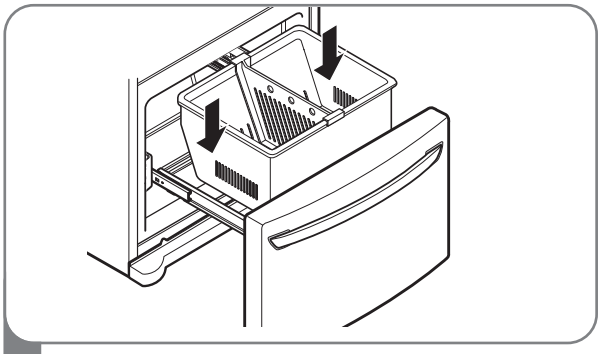

4 With the drawer pulled out to full extension, insert the lower basket in the rail assembly.

⚠ **WARNING:** To prevent accidental child and pet entrapment or suffocation risk. DO NOT allow them to play inside of drawer.

⚠ **WARNING:** DO NOT step or sit down on freezer.

LIGHT REPLACEMENT

To Change Refrigerator Light

This model has special LED interior lighting and service should be performed by a qualified technician.

⚠WARNING

Electrical Shock Hazard

Before replacing a burned-out light bulb, either unplug the refrigerator or turn off power at the circuit breaker or fuse box.

NOTE: Moving the control to the OFF position does not remove power to the light circuit.

CONNECTING THE WATER SUPPLY

⚠WARNING

Connect to safe drinking water supply only.

- The water pressure must be between 20 and 120 psi (140 and 830 kPa) on models without a water filter and between 40 and 120 psi (280 and 830 kPa) on models with a water filter.
- If water pressure does not reach 20 psi (140 kPa) or falls below, it is necessary to purchase a separate pressure pump for normal automatic icemaker and water dispensing operation.
- It is recommended that the total length of the water feed tube does not exceed 26 ft. (8 m).
- Install the water supply line where it will not be affected by heat.
- If a **reverse osmosis water filtration system** is connected to your cold water supply, This water line installation is not warranted by the refrigerator or icemaker manufacturer. Follow next instructions carefully to minimize the risk of expensive water damage.
- If a **reverse osmosis water filtration system** is connected to your cold water supply, the water pressure to the reverse osmosis system needs to be a minimum of 40 and 60 psi (280 and 420 kPa), less than 2.0~3.0sec to fill a cup of 7oz capacity).
  If the water pressure from the reverse osmosis system is less than 20 psi (140 kPa , more than 4.0sec to fill a cup of 7oz (200cc) capacity):
- Check to see whether the sediment filter in the reverse osmosis system is blocked. Replace the filter if necessary.
- Allow the storage tank on the reverse osmosis system to refill after heavy usage.
- If the issue about water pressure from reverse osmosis remains, call a licensed, qualified plumber.

IMPORTANT: Read all directions thoroughly before you begin.

- If operating the refrigerator before installing the water connection, turn the icemaker to the OFF position to prevent operation without water.
- All installations must be in accordance with local plumbing code requirements.
- Use copper tubing and check for leaks.
- Install tubing only in areas where temperatures will remain above freezing.
- It may take up to 24 hours for the icemaker to begin producing ice.

Tools Required

- Standard screwdriver
- 7/16-in. and 1/2-in. open-end wrenches or two adjustable wrenches
- 1/4-in. nut driver
- 1/4-in. drill bit
- Hand drill or electric drill (properly grounded)

NOTE: Refrigerator dealers offer a kit with a 1/4-in. saddle-type shutoff valve, a union, and copper tubing. Before purchasing, make sure a saddle-type valve complies with local plumbing codes.

Do not use a piercing-type or 3/16-in. saddle valve which reduces water flow and clogs more easily.

NOTE: The Commonwealth of Massachusetts Plumbing Code 248CMR shall be adhered to.

Saddle valves are illegal and use is not permitted in Massachusetts. Consult with your licensed plumber.

Cold Water Supply

- The icemaker water valve contains a flow washer which is used as a water pressure regulator.
- The icemaker needs to be connected to a cold water line with water pressure between 20 and 120 psi (140 and 830 kPa) on models without a water filter and between 40 and 120 psi (280 and 830 kPa) on models with a water filter.

CONNECTING THE WATER LINES

IMPORTANT: Before connecting the tubing to the water line, unplug the refrigerator or disconnect the power.

- Turn off the main water supply and open the nearest faucet to relieve pressure in the line. Opening an outside faucet may help drain water from the line in the house.
- Find a 1/2-in. vertical COLD water pipe near the refrigerator.

NOTE: A horizontal pipe will work, but the following precaution must be taken: drill on the top of the pipe, not the bottom. This will help keep water away from the drill and also keep normal sediment from collecting in the valve.

- To determine the length of copper tubing you will need, measure from the connection on the lower left rear of the refrigerator to the water pipe. Add 7 ft. (2.1 m) to allow for moving the refrigerator for cleaning. Use 1/4-in. O.D. (outside diameter) copper tubing. Be sure both ends of the copper tubing are cut square.
- Using a drill, drill a 1/4-in. hole in the cold water pipe you have selected.
- Fasten the shutoff valve to the cold water pipe with the pipe clamp. Be sure the outlet end is solidly in the 1/4-in. drilled hole in the water pipe and the washer is under the pipe clamp. Tighten the packing nut. Tighten the pipe clamp screws carefully and evenly so the washer makes a watertight seal. Do not overtighten or you may crush the copper tubing, especially if soft (coiled) copper tubing is used. Now you are ready to connect the copper tubing.
- Slip the compression sleeve and the compression nut onto the copper tubing as shown. Insert the end of the tubing into the outlet end squarely as far as it will go. Screw the compression nut onto the outlet end with a wrench. A flare nut wrench works best, but an open-end wrench will suffice. Do not overtighten.
- Place the free end of the tubing into a container or sink, and turn on the main water supply. Flush out the tubing until the water is clear. Turn off the shutoff valve on the water pipe. Coil the copper tubing as shown below.

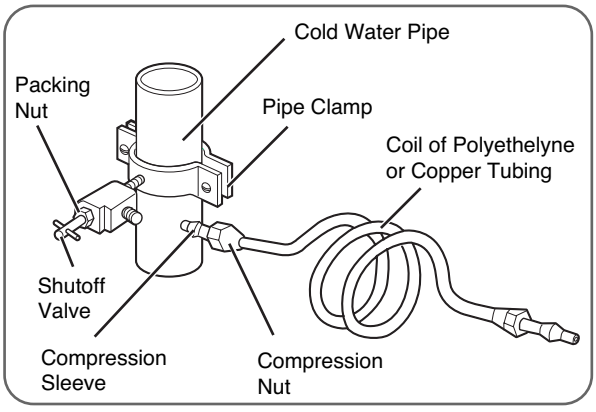

IMPORTANT: Before connecting the tubing to the refrigerator, be sure the refrigerator power cord is not plugged into the wall outlet.

NOTE: If your refrigerator is equipped with an internal water filter, an external in-line water filter should not be used.

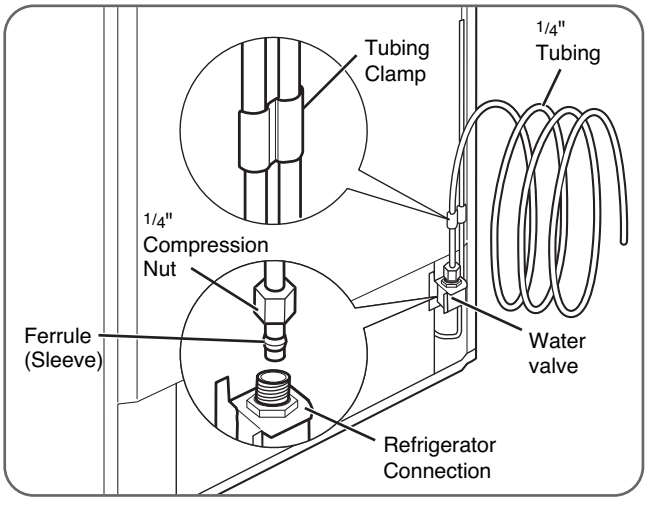

- Remove the plastic flexible cap from the water valve.
- Place the compression nut and ferrule (sleeve) onto the end of the tubing as shown.
- Insert the end of the copper tubing into the connection as far as possible. While holding the tubing, tighten the fitting.

IMPORTANT: Tighten any connections that leak.
Open the water at the shutoff valve.

- Plug in the refrigerator.
- Arrange the coil of copper tubing behind the refrigerator so it does not vibrate against the back of the refrigerator or against the wall.
- Check for leaks.
- Before connecting the water line to house, purge the house line for 2 minute.

NOTE: It may take a few seconds for water to begin to flow as the internal tank fills and air clears from the lines.

- Push the refrigerator back to the wall.
- Set the icemaker switch to the ON position.

NOTE: The icemaker will not begin to operate until it reaches its operating temperature of 15°F (-9°C).
It will then begin operation automatically.

NOTE: Throw away the first few batches of ice (about 20 pieces).

LEVELING THE REFRIGERATOR DOORS

⚠WARNING

Electrical Shock Hazard

- Be careful when you work with the hinges, base grille, and stopper. You may be injured.
- Do not put hands, feet, or metal items into the air vents, base grille, or the bottom of the refrigerator. You may be injured or receive an electrical shock.

Leveling

After installing, secure the product with the LEGS so it does not move to the right or left.

Your refrigerator has two front leveling legs—one on the right and one on the left. Adjust the legs to alter the tilt from front to back or side to side. If your refrigerator seems unsteady or you want the doors to close more easily, adjust the refrigerator's tilt using the following instructions:

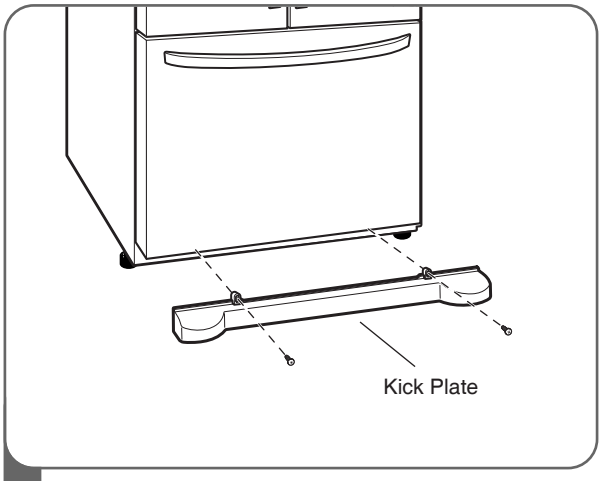

1 Plug the power cord into a 3-prong grounded outlet, and move the refrigerator into its final position. Remove the kick plate screws and then the kick plate.

- Open the Freezer Drawer.
- Once the drawer is open, there is sufficient clearance to remove the screws on top of the kick plate.

NOTE: To replace the kick plate, place it into position, and then insert and tighten the screws.

⚠CAUTION

- To avoid possible injury or product or property damage, you will need two people to perform the following instructions.

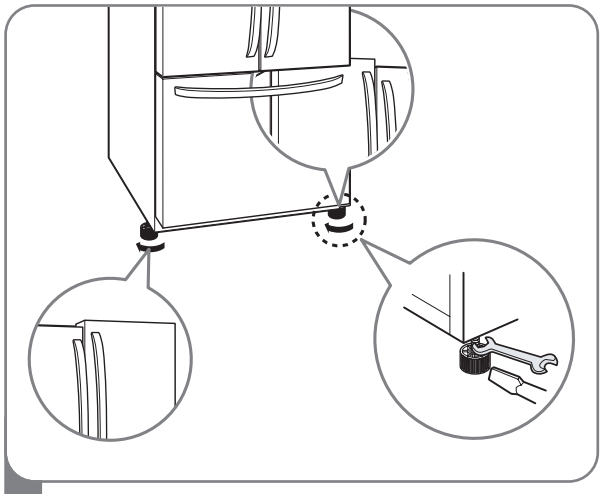

2 Level the refrigerator by using an 11/32 inch (8mm), 11/16 inch (18mm) wrench or a flat blade screw driver.

Turn the leveling legs (CCW) to raise or (CW) to lower the height of the front of the refrigerator.

NOTE: The front of the refrigerator should be slightly higher than the back.

NOTE: If someone pushes backward against the top of the refrigerator, weight is lifted off of the leveling legs, which makes adjustment easier.

Open both doors to make sure they close easily. If not, raise the leveling legs higher by turning both clockwise the same amount.

Once the refrigerator is level, replace the kick-plate.

NOTE: Your new refrigerator is uniquely designed with two fresh food doors. Either door can be independently opened or closed.

You will have to exert slight pressure on the doors to close them completely.

NOTE: In order not to move the refrigerator back and forth, fix it with the 'Adjust' to the floor to install and use.

LEVELING THE REFRIGERATOR DOORS (CONT.)

Door Alignment

Both the left and right refrigerator doors have an adjustable nut, located on the bottom hinge, to raise and lower them to align properly. If the space between your doors is uneven, follow the instructions below to align the doors evenly:

Use the wrench (included with the Owner's Manual) to turn the nut in the door hinge to adjust the height. To the right to raise or to the left to lower the height.

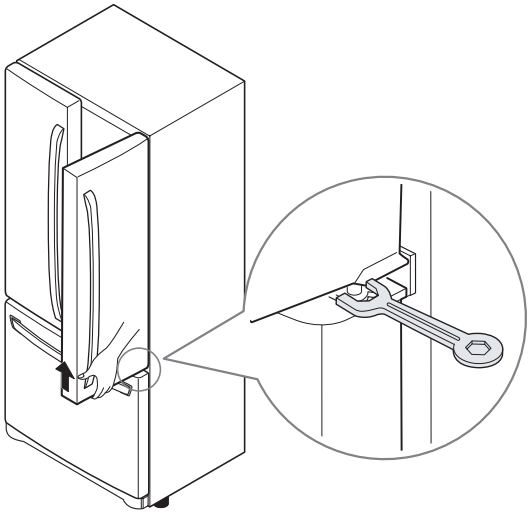

STARTING

Before loading your refrigerator with fresh foods:

- Remove tape and any temporary labels from your refrigerator before using. To remove any remaining adhesive residue, rub the area briskly with your thumb, or rub a small amount of liquid dish soap over the adhesive with your fingers. Wipe with warm water and dry. Do not use sharp instruments, rubbing alcohol, flammable fluids, or abrasive cleaners to remove tape or glue.

NOTE: Do not remove any warning-type labels, the model and serial number label, or the tech sheet that is taped to the back of the refrigerator.

- Thoroughly clean your refrigerator and wipe off all dust that may have accumulated during shipping.
- Install accessories such as the ice cube bin, drawers, and shelves, in their proper places. They are packed together to prevent possible damage during shipment.
- Adjust the desired temperature for the refrigerator and freezer (see Adjusting the Temperature and Functions).
- Let your refrigerator run for at least 2 or 3 hours before putting food in it. Check the flow of cold air in the freezer compartment to ensure proper cooling. Your refrigerator is now ready for use.

SETTING THE CONTROLS

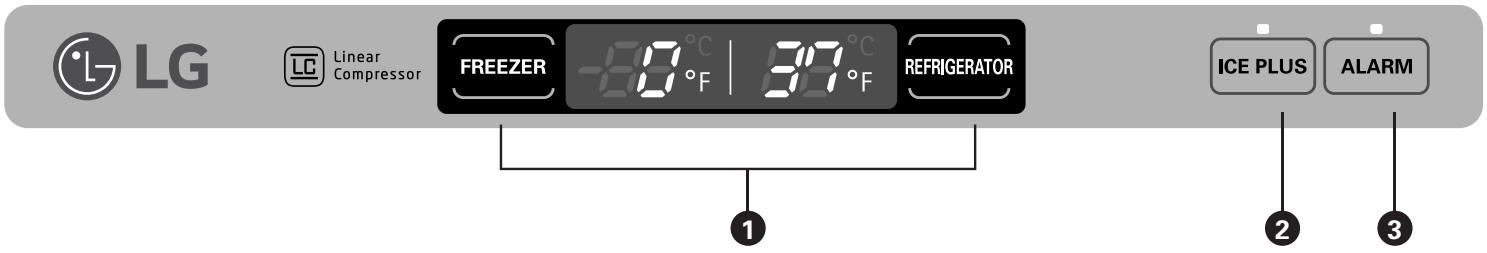

❶ TEMPERATURE

- Your refrigerator has a control pad inside the refrigerator compartment that lets you regulate the temperature in the freezer and refrigerator compartments.
- Initially set the refrigerator control at 37°F (3°C) and the freezer control at 0°F (-18°C). Leave it at these settings for 24 hours (one day) to stabilize. Then adjust the compartment temperature as desired.
- Refrigerator Temp Control: 33°F to 46°F (0°C to 8°C)

  The lower the number setting, the colder the refrigerator compartment will become.
- Freezer Temp Control: -6°F to 8°F (-21°C to -13°C)

  When the setting is at a lower number, the freezer compartment becomes colder. The refrigerator compartment becomes warmer because less cold air flows into the refrigerator.

❷ ICE PLUS

- When you press the ICE PLUS button, the graphic [ICE PLUS] will light up in the display and it continues for 24hours. It will automatically shut off after 24hours have passed.
  Or you can stop this function manually by pressing the button one more time.
- This function increases both icemaking and freezing capabilities.

NOTE: If you want to change °F to °C, press and hold FREEZER key and REFRIGERATOR key over 5 seconds at the same time. and if you want to change °C to °F, hold them for 5 seconds again.

❸ ALARM

- When the power is connected to the refrigerator, door alarm is initially set ON and door alarm display will show [ALARM] (ON).
- When either refrigerator or the freezer door is left open for more than 60 seconds, the alarm will ding to let you know the door is open.
- When you close the door, the door alarm will stop dinging.
- If you want to disable the door alarm function, press [ALARM] button then the door alarm display will switched to [ALARM] (OFF).

⚠CAUTION

Display mode setting and its cancellation

- With the refrigerator door open, keep pressing the REFRIGERATOR Button and ICE PLUS Button more than 5 seconds, then it goes to the display mode with Special Beep Sound with special beep sound.
- Perform the same way again to cancel the display mode.
- All freezing unit will be turned off at display mode (Exceptions: Lamp, Display)

AUTOMATIC ICEMAKER

⚠WARNING

Personal Injury Hazard

- DO NOT insert your hands in to the Icemaker in operation. It may cause to injure you.

Operation instructions

A newly-installed refrigerator may take 12 to 24 hours to begin making ice.

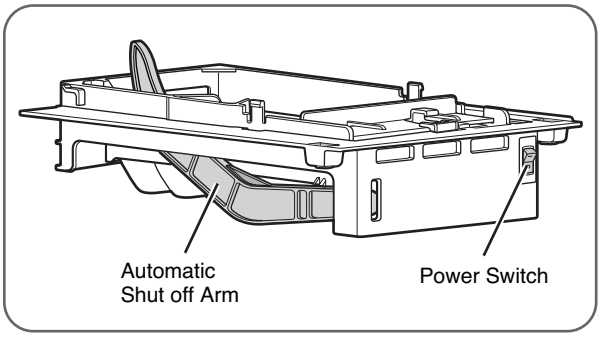

The icemaker will produce 12 cubes per cycle-approximately 90-130 cubes in a 24-hour period, depending on freezer compartment temperature, room temperature, number of door openings and other operating conditions.

If the refrigerator is used before the water connection is made to the icemaker, set the power switch to O (off).

When the refrigerator has been connected to the water supply, set the power switch to I (on).

The icemaker will fill with water when it cools to freezing.

A newly-installed refrigerator may take 12 to 24 hours to begin making ice cubes.

Throw away the first few batches of ice to allow the water line to clear.

Be sure nothing interferes with the sweep of the Automatic Shut off Arm.

When the bin fills to the level of the Automatic Shut off Arm, the icemaker will stop producing ice.

It is normal for several cubes to be stuck together.

If ice is not used frequently, old ice cubes will become cloudy, taste stale, and shrink.

When you should set the icemaker power switch to O(off)

- When the water supply will be shut off for several hours.
- When the ice storage bin is removed for more than a minute or two.
- When the refrigerator will not be used for several days.

Normal sounds you may hear

- The icemaker water valve will buzz as the icemaker fills with water. If the power switch is in the I (on) position, it will buzz even if it has not yet been hooked up to water.
  To stop the buzzing, move the power switch to O (off).
  NOTE: Keeping the power switch in the I (on) position before the water line is connected can damage the icemaker.
- You will hear the sound of cubes dropping into the bin and water running in the pipes as the icemaker refills.

Preparing for vacation

Set the icemaker power switch to O (off) and shut off the water supply to the refrigerator.

If the ambient temperature will drop below freezing, have a qualified servicer drain the water supply system to prevent serious property damage due to flooding from ruptured water lines or connections.

STORING FOODS

- Store fresh food in the refrigerator compartment.
- How food is frozen and thawed is an important factor in maintaining freshness and flavor.
- Do not store food that spoils easily, such as bananas and melons, at low temperatures.
- Allow hot food to cool prior to storing; placing hot food in the refrigerator could spoil other food and lead to higher energy consumption.
- When storing food, cover it with vinyl wrap or store in a container with a lid. This prevents moisture from evaporating and helps food to keep its flavor and nutrition.
- Do not block air vents with food or containers. Smooth circulation of chilled air keeps the refrigerator temperatures even.
- Do not open the doors frequently. Opening the doors allows warm air to enter the refrigerator and freezer compartments, which causes temperatures to rise.
- Never overload the door racks; overloading may push against the inner racks and prevent the doors from closing correctly.

Freezer compartment

- Do not store glass bottles in the freezer compartment; glass may break when the contents are frozen.
- Do not refreeze food that has been thawed. This causes loss of flavor and nutrition.
- Do not touch cold foods or containers, especially those made of metal, with wet hands or place glass products in the freezer compartment.
- Do not use the egg box as an ice bin in the freezer. The egg box will break easily if it freezes.

Refrigerator compartment

- Avoid placing moist food on the top refrigerator shelves; it could freeze from direct contact with chilled air.
- Always clean food prior to refrigeration. Vegetables and fruits should be washed and wiped and packed food should be wiped to prevent adjacent food from spoiling.

NOTE: If you keep the refrigerator in a hot and humid place, frequent opening of the door or storing a lot of vegetables in the refrigerator may cause condensation to form. Wipe the condensation with a clean cloth or a paper towel.

LOCATION OF FOODS

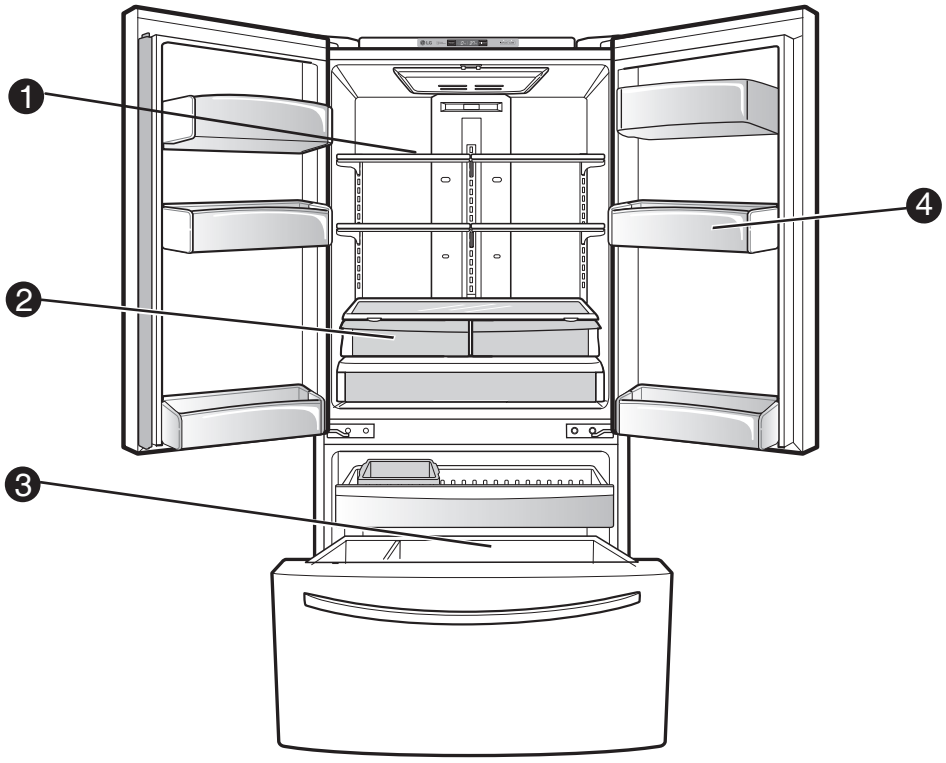

1 REFRIGERATOR COMPARTMENT SHELVES

Store larger food items, platters, and containers on the expansive refrigerator compartment shelves.

2 CRISPERS

Store vegetables or fruits with humidity control.

3 DURABASE ®

Largest storage space in the freezer.

4 GALLON STORAGE BINS

Store small packed food or beverages such as condiments, salad dressings, baby foods, milk, or juice.

SHELF HEIGHT ADJUSTMENT

The shelves in your refrigerator are adjustable to meet your individual storage needs.

Storing similar food items together in your refrigerator and adjusting the shelves to fit different heights of items will make finding the exact item you want easier; it will also reduce the amount of time the refrigerator door is open, saving energy.

IMPORTANT: Do not clean glass shelves with warm water when they are cold. Shelves may break if exposed to sudden temperature changes or impact, such as bumping. For your protection, glass shelves are made with tempered glass, which will shatter into small, pebble-sized pieces.

NOTE: Glass shelves are heavy. Use special care when removing them to avoid dropping them.

Adjusting Shelves

Remove shelves from the shipping position and place shelves in the position you want.

⚠CAUTION

Make sure that shelves are level from one side to the other. Failure to do so may result in the shelf's falling or spilling food.

Remove Shelf

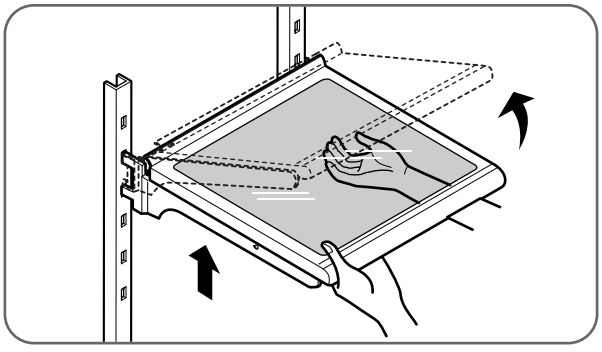

Tilt up the front of the shelf. Lift up the back and pull out the shelf.

Reinstall Shelf

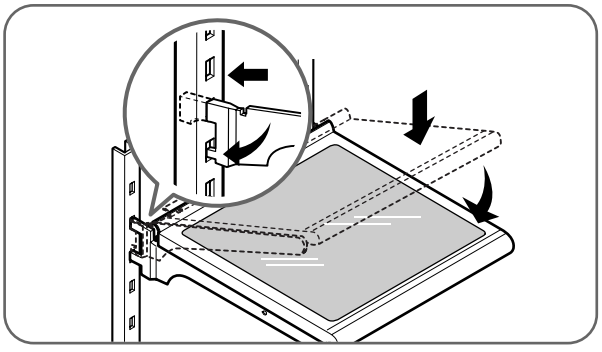

Tilt up the front of the shelf and guide the shelf hooks into the slots at a desired height. Then lower the front of the shelf so that the hooks drop into the slots.

REMOVING AND REPLACING COMPONENTS

⚠ CAUTION

- Personal injury can occur if the door bins are not firmly assembled.
  NOTE: DO NOT adjust a loaded bin.
- DO NOT allow children to play with baskets. The sharp corners on the baskets could cause injury.

Gallon Storage Bins

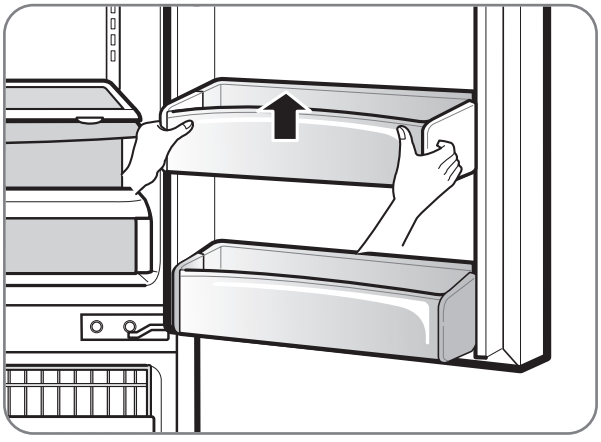

The door bins are removable for easy cleaning and adjusting. Simply lift the bin and pull it straight out to remove it. To replace the bin, slide it in above the desired support button and push down until it stops.

REMOVING AND REPLACING COMPONENTS (CONT.)

Crisper humidity control

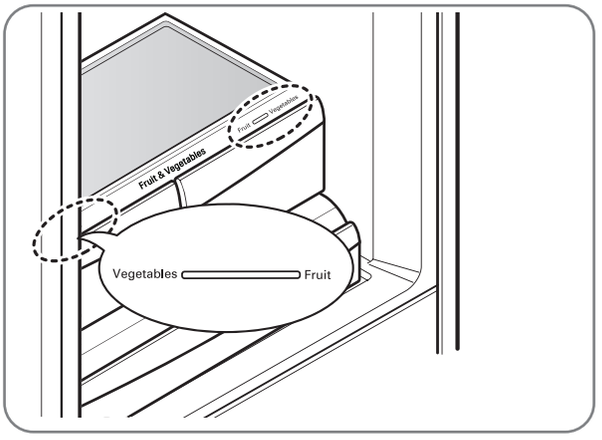

You can control the amount of humidity in the moisture-sealed crispers. Store vegetables or fruits requiring more or less humidity in separate crispers. Adjust the control to any setting between Vegetables and Fruit.

- Fruit lets moist air out of the crisper for best storage of fruits.
- Vegetables keeps moist air in the crisper for best storage of fresh, leafy vegetables.

CAUTION : The glass shelf over the crisper is not firmly secured. Be careful when tilting.

Removing crisper

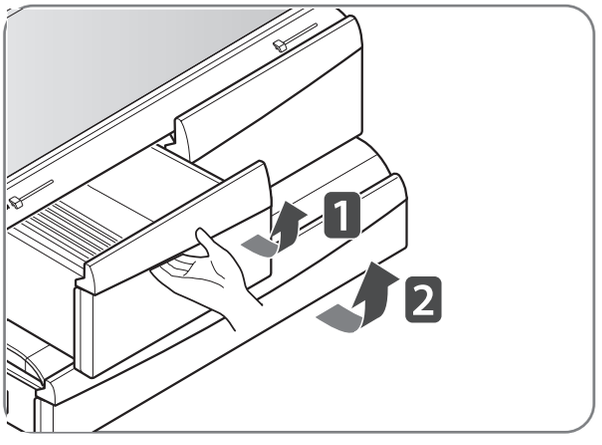

- To remove, pull the drawer out to full extension.
- Lift the front of the crisper up, then pull it straight out.
- To install, slightly tilt up the front and insert the drawer into the frame and push it back into place.

To remove the glass

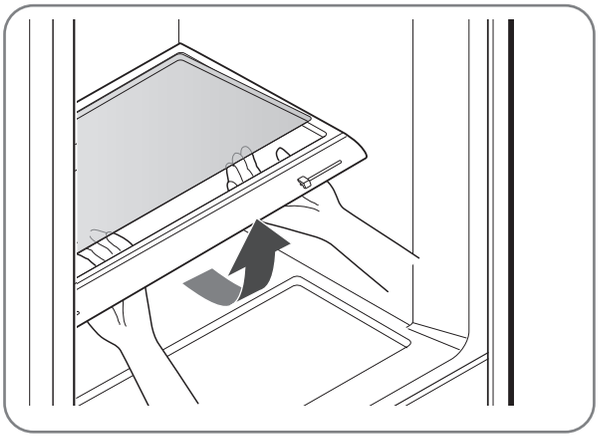

- Lift up the glass under the crisper cover.
- Pull the glass up and out.

⚠ WARNING

Child Entrapment Hazard

- If the Durabase divider is removed, there is enough open space for children or pets to crawl inside. To prevent accidental child and pet entrapment or suffocation risk, DO NOT allow them to play inside of drawer.

DuraBase ® Divider

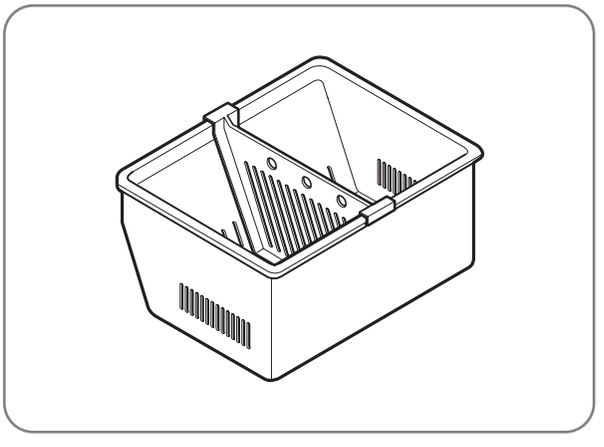

CLEANING THE REFRIGERATOR

WARNING

Explosion Hazard

- **Use nonflammable cleaner.**
- **Failure to do so can result in death, explosion, or fire.**

Both the refrigerator and freezer sections defrost automatically. However, clean both sections about once a month to prevent odors. Wipe up spills immediately.

- Unplug the refrigerator.
- Remove all removable parts, such as shelves and crispers.
- Use a clean sponge or soft cloth and a mild detergent in warm water. Do not use abrasive or harsh cleaners.
- Hand wash, rinse, and thoroughly dry all surfaces.
- Plug in the refrigerator.

NOTE: Window sprays, abrasive cleaners, or flammable fluids can scratch or damage plastic covers or panels.

Cleaning the Exterior

For models with a stainless steel exterior, use a commercially available stainless steel cleaner in accordance with the manufacturer's instructions.

You may also use a clean sponge or soft cloth and a mild detergent in warm water. Do not use abrasive or harsh cleaners. Dry thoroughly with a soft cloth. Do not use appliance wax, bleach, or other products containing chlorine on stainless steel.
IMPORTANT: Do not use cleaning waxes, concentrated detergents, or cleaners containing petroleum on plastic refrigerator parts such as door liners or gaskets.

Care and Cleaning of the Interior

NOTE: Allow the freezer to warm so the cleaning cloth will not stick.

To help remove odors, you can wash the inside of the refrigerator with a mixture of baking soda and warm water. Mix 2 tbsp. baking soda to 1 qt. of water (26 g soda to 1 L of water). Be sure the baking soda dissolves completely so it does not scratch the surfaces of the refrigerator.

IMPORTANT: Do not use a spray nozzle to clean the interior.

GENERAL INFORMATION

Storage

During average-length vacations, you will probably find it best to leave the refrigerator in operation. Place freezable items in the freezer for longer life.

When you plan to store the refrigerator, remove all food, disconnect the power cord, clean the interior thoroughly, and block the doors open to prevent mold and mildew. Be certain the stored refrigerator does not present a child entrapment danger.

Moving

Unload the refrigerator to move it. (This is probably not necessary when pulling it out to clean behind it.) Be sure to let the refrigerator warm up to room temperature, and dry the inside before closing the doors to pack it for moving. To avoid damaging the height-adjusting screws, turn them all the way into the base.

Power Failure

Most power failures that are corrected within an hour or two will not affect your refrigerator temperatures. However, you should minimize the number of door openings while the power is off.

Water may drip from the ice bin during a power outage. To prevent this, remove the ice bin, discard all of the ice, towel dry, and replace.

SMART DIAGNOSIS

SMART DIAGNOSIS™

Should you experience any problems with your refrigerator, it has the capability of transmitting data via your telephone to the LG service center. This gives you the capability of speaking directly to our trained specialists. The specialist records the data transmitted from your machine and uses it to analyze the issue, providing a fast and effective diagnosis.

If you experience problems with your refrigerator, call 1-800-243-0000. Only use the Smart Diagnosis feature when instructed to do so by the LG call center agent. The transmission sounds that you will hear are normal and sound similar to a fax machine.

Smart Diagnosis cannot be activated unless your refrigerator is connected to power. If your refrigerator is unable to turn on, then troubleshooting must be done without using Smart Diagnosis.

Using Smart Diagnosis

First, call 1-800-243-0000. Only use the Smart Diagnosis feature when instructed to do so by the LG call center agent.

1 Hold the mouthpiece of your phone in front of the speaker that is located on the right hinge of the refrigerator door, when instructed to do so by the call center.

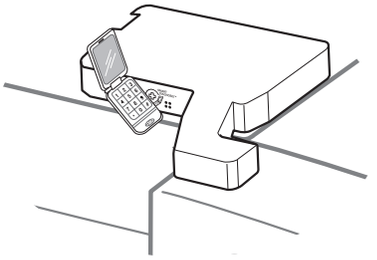

2 Press and hold the Freezer Temperature button for three seconds while continuing to hold your phone to the speaker.



3 After you hear three beeps, release the Freezer Temperature button.

4 Keep the phone in place until the tone transmission has finished.The display will count down the time. Once the countdown is over and the tones have stopped, resume your conversation with the specialist, who will then be able to assist you in using the information transmitted for analysis.

NOTE

- For best results, do not move the phone while the tones are being transmitted.
- If the call center agent is not able to get an accurate recording of the data, you may be asked to try again.

NOTE

- Call quality differences by region may affect the function.
- Use the home telephone for better communication performance, resulting in better service.
- Bad call quality may result in poor data transmission from your phone to the machine, which could cause Smart Diagnosis to not work properly.

BEFORE CALLING FOR SERVICE

Before calling for service, review this list. It may save you both time and expense. This list includes common occurrences that are not the result of defective workmanship or materials in this appliance.

Problem	Possible Causes	Solutions
Refrigerator compressor does not run.	• Refrigerator control is off. • Refrigerator is in defrost cycle. • Plug at the wall outlet is disconnected. • Power outage. Check house lights.	• Set the refrigerator control. • This is normal for a fully automatic defrosting refrigerator. The defrost cycle occurs periodically. • Make sure the plug is tightly pushed into the outlet. • Call the local electric company.
Refrigerator compressor runs too frequently or too long.	• Refrigerator is larger than the previous one you owned. • The room or the outdoor weather is hot. • Refrigerator was recently disconnected for a while. • Large amounts of warm or hot food may have been stored recently. • Doors are opened too frequently or for too long. • Refrigerator or freezer door may be slightly open. • Refrigerator control is set too cold. • Refrigerator or freezer gasket is dirty, worn, cracked, or poorly fitted.	• This is normal. Larger, more efficient units run longer. • It is normal for the refrigerator to work longer under these conditions. • It takes a few hours for the refrigerator to reach cooling temperatures. • Warm food will cause the refrigerator to run longer until the desired temperature is reached. • Warm air entering the refrigerator causes it to run more. Open the door less often. • Make sure the refrigerator is level. Keep food and containers from blocking the door. • Adjust the refrigerator control to a warmer setting until the refrigerator temperature is satisfactory. • Clean or change the gasket. Leaks in the door seal will cause the refrigerator to run longer in order to maintain desired temperatures.
Refrigerator compressor cycles on and off.	• The thermostat is keeping the refrigerator at a constant temperature.	• This is normal. The refrigerator cycles on and off to keep the temperature constant.
Temperature in the freezer is too cold, but the refrigerator temperature is satisfactory.	• Freezer control is set too cold.	• Adjust the freezer control to a warmer setting until the freezer temperature is satisfactory.
Temperature in the refrigerator is too cold, but the freezer temperature is satisfactory.	• Refrigerator control is set too cold.	• Adjust the refrigerator control to a warmer setting.

BEFORE CALLING FOR SERVICE (CONT.)

Problem	Possible Causes	Solutions
Food stored in refrigerator drawers freezes.	• Refrigerator control is set too cold.	• Adjust the refrigerator to a warmer setting.
Temperatures in the refrigerator or freezer are too warm.	• Freezer or refrigerator control is set too warm. • Doors are opened too frequently or for too long. • Door is slightly open. • Large amounts of warm or hot food may have been stored recently. • Refrigerator has recently been disconnected for a period of time.	• Adjust the freezer or refrigerator control to a colder setting until the freezer or refrigerator temperature is satisfactory. • Warm air enters the refrigerator/freezer whenever the door is opened. Open the door less often. • Close the door completely. • Wait until the refrigerator or freezer has had a chance to cool food to the set temperature. • It takes a few hours for the refrigerator to reach the set temperatures.
Temperature in the refrigerator is too warm, but the freezer temperature is satisfactory.	• Refrigerator control is set too warm.	• Adjust the refrigerator control to a colder setting.
Louder sound levels when compressor comes on.	• Refrigerator operates at higher pressures during the start of the ON cycle.	• This is normal.
Vibrating or rattling noise.	• Floor is uneven or weak. The refrigerator rocks on the floor when it is moved slightly. • Items placed on the top of the refrigerator are vibrating. • Dishes are vibrating on the shelves in the refrigerator. • The refrigerator is touching the wall or cabinets.	• Be sure floor is level and solid and can adequately support the refrigerator. • Remove items. • It is normal for dishes to vibrate slightly. Move dishes slightly. Make sure refrigerator is level and firmly set on floor. • Move the refrigerator so that it does not touch the wall.
Moisture collects on the inside walls of the refrigerator.	• The weather is hot and humid which increases the rate of frost buildup and internal sweating. • Door is slightly open. • Door is opened too often or for too long.	• This is normal. • Close the door. • Open the door less often.
Moisture forms on the outside of the refrigerator or between the doors.	• Weather is humid. • Door is slightly open.	• This is normal in humid weather. When humidity is lower, the moisture should disappear. • Close the door completely.

BEFORE CALLING FOR SERVICE (CONT.)

Problem	Possible Causes	Solutions
Moisture forms on the dispenser.	• Moisture may form when the temperature or humidity are high.	• Wipe off the moisture.
Odors in the refrigerator.	• Interior needs to be cleaned. • Food with strong odor is in the refrigerator. • Some containers and wrapping materials produce odors.	• Clean interior with sponge, warm water, and baking soda. Be sure the soda is completely dissolved so it will not act as an abrasive compound. • Cover food completely. • Use a different container or brand of wrapping materials.
The door(s) will not close.	• Food package is keeping the door open. • Door was closed too hard, causing other door to open slightly. • Refrigerator is not level. It rocks on the floor when it is moved slightly. • Floor is uneven or weak. The refrigerator rocks on the floor when it is moved slightly. • Refrigerator is touching the wall or the cabinets.	• Move the packages that keep the door from closing. • Gently close both doors. • Adjust the height-adjusting screw. • Be sure the floor is level and can adequately support the refrigerator. Contact a carpenter to correct sagging or sloping floor. • Move the refrigerator.
Drawers are difficult to move.	• Food is touching the shelf on top of the drawer. • The drawer track is dirty.	• Keep less food in the drawer. • Clean the drawer and the track.
Sound of ice dropping.	• A batch of ice has been released into the ice bin.	• This sound is made when automatically made ice is dropped into the ice storage bin. The volume may vary according to the location of the refrigerator.
Sound of water trickling.	• The icemaker is being supplied with water.	• This sound is normally made when the icemaker is supplied with water after dropping the automatically made ice. • If this sound lasts more than 10 seconds, check for a leak.

BEFORE CALLING FOR SERVICE (CONT.)

Problem	Possible Causes	Solutions
The icemaker is not producing ice or not enough ice	• New installation.	• Wait 24 hours after ice maker installation for ice production to begin. Wait 72 hours for full ice production.
	• Refrigerator is not connected to a water supply and the supply shutoff valve is not turned on.	• Connect refrigerator to water supply and turn water shutoff valve fully open.
	• Reverse osmosis water filtration system is connected to your cold water supply.	• This can decrease water pressure and a little water comes to icemaker.
	• Kink in the water source line.	• A kink in the line can reduce water flow. Straighten the water source line.
	• Large amount of ice recently has been removed.	• Allow 24 hours for ice maker to produce more ice.
	• The icemaker is not turned on.	• On the icemaker itself, there should be a power switch. It may have an “I” and “O” on it. The “I” position is on. If it is off, please flip it to the on position.
	• There is Something on the Ice-detecting sensor.	• Foreign substance or frost on theIce-detecting sensor stops making ices. To keep making ice, clean up the surface of Ice-detecting sensor with clean and soft fabric.
	• The temperature setting is too warm on Freezer.	• Below -1°F is recommended temperature setting of the freezer compartment for normal ice production. If the freezer temperature is set at a warmer temperature, then the ice will produce at a slower rate.
	• The doors are opened often.	• If the doors of the unit are opened often, the cold air will escape which will prevent the unit from maintaining the set temperature. Lowering the temperature can help, as well as not opening the doors as frequently.
	• Any door is not closing properly.	• The door that is not closed properly, makes the Freezer temperature high and icemaker will make ices slowly.
	• The ice compartment door is not closing properly.	• The compartment door, that is not closed properly, make the compartment temperature high and icemaker makes ices slowly.
	• Ice Plus is not selected.	• With this option, the cold air in the compartment is increased as is ice production.
The interior of the refrigerator is covered with dust or soot.	• The refrigerator is located near a fire source, such as a fireplace, chimney or candle.	• Make sure that the refrigerator is not located near a fire source, such as a fireplace, chimney or candle.
Other	Please thoroughly read the Automatic Icemaker and Operating the Dispenser sections in this manual.	

KEY DIMENSIONS AND SPECIFICATIONS

The appearance and specifications listed in this guide may vary due to constant product improvements.

Bottom-Freezer Refrigerator Models LFC28768**	
Description	French Door Refrigerator
Electrical Requirements	115 VAC @ 60 Hz
Min. / Max. Water Pressure	20 and 120 psi (140 and 830 kPa)
Dimensions	35 3/4" (W) X 35 3/8" (D) X 69 3/4" (H), 47 5/8" (D w/ door open) 908 mm (W) X 899 mm (D) X 1772 mm (H), 1210 mm (D w/ door open)
Net Weight	309lb. (140 kg)

LG ELECTRONICS U.S.A., INC.
LG REFRIGERATOR LIMITED WARRANTY - U.S.A.

Should your LG Refrigerator ("Product") fail due to a defect in materials or workmanship under normal home use, during the warranty period set forth below, LG will at its option repair or replace the product. This limited warranty is valid only to the original retail purchaser of the product and applies only when purchased and used within the United States including U.S. Territories. Proof of original retail purchase is required to obtain warranty service under this limited warranty.

WARRANTY PERIOD			
Refrigerator	**Sealed System (Condenser, Dryer, Connecting Tube and Evaporator)**		**Linear Compressor**
One (1) year from the date of original retail purchase	**One (1) year from the date of original retail purchase**	**Seven (7) years from the date of original retail purchase**	**Ten (10) years from the date of original retail purchase**
Parts and Labor (internal/functional parts only)	Parts and Labor	Parts only (Consumer will be charged for labor)	Part only (Consumer will be charged for labor)

Noises associated with normal operation and failure to follow instructions found in the use and care and installation guides or operating the unit in an unsuitable environment will not be covered under this warranty.

- ▶ Replacement products and parts are warranted for the remaining portion of the original warranty period or ninety (90) days, whichever is greater.
- ▶ Replacement products and parts may be new or remanufactured.

THIS WARRANTY IS IN LIEU OF ANY OTHER WARRANTY, EXPRESS OR IMPLIED, INCLUDING WITHOUT LIMITATION, ANY WARRANTY OF MERCHANTABILITY OR FITNESS FOR A PARTICULAR PURPOSE. TO THE EXTENT ANY IMPLIED WARRANTY IS REQUIRED BY LAW, IT IS LIMITED IN DURATION TO THE EXPRESS WARRANTY PERIOD ABOVE. NEITHER THE MANUFACTURER NOR ITS U.S. DISTRIBUTOR SHALL BE LIABLE FOR ANY INCIDENTAL, CONSEQUENTIAL, INDIRECT, SPECIAL, OR PUNITIVE DAMAGES OF ANY NATURE, INCLUDING WITHOUT LIMITATION, LOST REVENUES OR PROFITS, OR ANY OTHER DAMAGE WHETHER BASED IN CONTRACT, TORT, OR OTHERWISE. Some states do not allow the exclusion or limitation of incidental or consequential damages or limitations on how long an implied warranty lasts, so the above exclusion or limitation may not apply to you. This warranty gives you specific legal rights and you may also have other rights that vary from state to state.

THIS LIMITED WARRANTY DOES NOT COVER:

1. Service trips to deliver, pick up, install, or repair the product; instruct the customer on operation of the product; repair or replace fuses or correct wiring or plumbing, or correction of unauthorized repairs/installation.
2. Failure of product to perform during power failures and interruptions or inadequate electrical service.
3. Damage caused by leaky or broken water pipes, frozen water pipes, restricted drain lines, inadequate or interrupted water supply or inadequate supply of air.
4. Damage resulting from operating the product in a corrosive atmosphere or contrary to the instructions outlined in the product owner's manual.
5. Damage to the product caused by accidents, pests and vermin, lightning, wind, fire, floods, or acts of God.
6. Damage resulting from misuse, abuse, improper installation, repair, or maintenance. Improper repair includes use of parts not approved or specified by LG.
7. Damage or failure caused by unauthorized modification or alteration, or if it is used for other than the intended purpose, or any water leakage where the unit was not properly installed.
8. Damage or failure caused by incorrect electrical current, voltage, or plumbing codes, commercial or industrial use, or use of accessories, components, or consumable cleaning products that are not approved by LG.
9. Damage caused by transportation and handling, including scratches, dents, chips, and/or other damage to the finish of your product, unless such damage results from defects in materials or workmanship and is reported within one (1) week of delivery (Call: 1-800-243-0000).
10. Damage or missing items to any display, open box, discounted, or refurbished product.
11. Products with original serial numbers that have been removed, altered, or can not be readily determined. Model and Serial numbers, along with original retail sales receipt, are required for warranty validation.
12. Increases in utility costs and additional utility expenses.
13. Replacement of light bulbs, filters, or any consumable parts.
14. Repairs when your product is used in other than normal and usual household use (e.g. commercial use, offices, and recreational facilities) or contrary to the instructions outlined in the product owner's manual.
15. Costs associated with removal of your product from your home for repairs.
16. The removal and reinstallation of the product if it is installed in an inaccessible location or is not installed in accordance with published installation instructions, including LG's owner's and installation manuals.
17. Shelves, door bins, drawers, handles, accessories, and other parts besidesÄthose that were originally included with this particular model.

The cost of repair or replacement under these excluded circumstances shall be borne by the consumer.

For complete warranty details and customer assistance, please call or visit our website:

Call 1-800-243-0000 (24 hours a day, 365 days a year) and select the appropriate option from the menu, or visit our website at **http://us.lgservice.com**
Or by mail: LG Customer Information Center:
P. O. Box 240007, 201 James Record Road Huntsville, Alabama 35813
ATTN: CIC

Write your warranty information below:

Product Registration Information:

Model: _____
Serial Number: _____
Date of Purchase: _____

LG ELECTRONICS CANADA, INC.
LG REFRIGERATOR LIMITED WARRANTY - Canada

WARRANTY: Should your LG Refrigerator ("**Product**") fail due to a defect in material or workmanship under normal home use during the warranty period set forth below, LG Canada will at its option repair or replace the Product upon receipt of proof of original retail purchase. This warranty is valid only to the original retail purchaser of the product and applies only to a Product distributed in Canada by LG Canada or an authorized Canadian distributor thereof. The warranty only applies to Products located and used within Canada.

WARRANTY PERIOD: (Note: If the original date of purchase can not be verified, the warranty will begin sixty (60) days from the date of manufacture)			
Refrigerator/Freezer	**Sealed System (Condenser, Dryer, Connecting Tube and Evaporator)**		**Linear Compressor**
One (1) year from the date of original retail purchase	**One (1) year from the date of original retail purchase**	**Seven (7) years from the date of original retail purchase**	**Ten (10) years from the date of original retail purchase**
Parts and Labor (internal/functional parts only)	Parts and Labor	Parts only (Consumer will be charged for labor)	Part only (Consumer will be charged for labor)

Noises associated with normal operation and failure to follow instructions found in the use and care and installation guides or operating the unit in an unsuitable environment will not be covered under this warranty.

- ▶ Replacement products and parts are warranted for the remaining portion of the original warranty period or ninety (90) days, whichever is greater.
- ▶ Replacement products and parts may be new or remanufactured.
- ▶ LG Authorized Service Center warranties their repair work for thirty (30) days.

LG CANADA'S SOLE LIABILITY IS LIMITED TO THE WARRANTY SET OUT ABOVE. EXCEPT AS EXPRESSLY PROVIDED ABOVE, LG CANADA MAKES NO AND HEREBY DISCLAIMS ALL OTHER WARRANTIES AND CONDITIONS RESPECTING THE PRODUCT, WHETHER EXPRESS OR IMPLIED, INCLUDING, BUT NOT LIMITED TO, ANY IMPLIED WARRANTY OR CONDITION OF MERCHANTABILITY OR FITNESS FOR A PARTICULAR PURPOSE, AND NO REPRESENTATIONS SHALL BE BINDING ON LG CANADA. LG CANADA DOES NOT AUTHORIZE ANY PERSON TO CREATE OR ASSUME FOR IT ANY OTHER WARRANTY OBLIGATION OR LIABILITY IN CONNECTION WITH THE PRODUCT. TO THE EXTENT THAT ANY WARRANTY OR CONDITION IS IMPLIED BY LAW, IT IS LIMITED TO THE EXPRESS WARRANTY PERIOD ABOVE. LG CANADA, THE MANUFACTURER OR DISTRIBUTOR SHALL NOT BE LIABLE FOR ANY INCIDENTAL, CONSEQUENTIAL, SPECIAL, DIRECT OR INDIRECT DAMAGES, LOSS OF GOODWILL, LOST PROFITS, PUNITIVE OR EXEMPLARY DAMAGES OR ANY OTHER DAMAGE, WHETHER ARISING DIRECTLY OR INDIRECTLY FROM ANY CONTRACTUAL BREACH, FUNDAMENTAL OR OTHERWISE, OR FROM ANY ACTS OR OMISSIONS, TORT, OR OTHERWISE. This warranty gives you specific legal rights. You may have other rights which may vary from province to province depending on applicable provincial laws. Any term of this warranty that negates or varies any implied condition or warranty under provincial law is severable where it conflicts with provincial law without affecting the remainder of this warranty's terms.

THIS LIMITED WARRANTY DOES NOT COVER:

1. Service trips to deliver, pick up, or install the product; instructing a customer on operation of the product; repair or replacement of fuses or correction of wiring or plumbing, or correction of unauthorized repairs/installation.
2. Failure of the product to perform during power failures and interruptions or inadequate electrical service.
3. Damage caused by leaky or broken water pipes, frozen water pipes, restricted drain lines, inadequate or interrupted water supply or inadequate supply of air.
4. Damage resulting from operating the Product in a corrosive atmosphere or contrary to the instructions outlined in the Product owner's manual.
5. Damage to the Product caused by accidents, pests and vermin, lightning, wind, fire, floods, or acts of God.
6. Damage resulting from the misuse, abuse, improper installation, repair, or maintenance of the Product. Improper repair includes use of parts not approved or specified by LG Canada.
7. Damage or product failure caused by unauthorized modification or alteration, or use for other than its intended purpose, or resulting from any water leakage due to improper installation.
8. Damage or Product failure caused by incorrect electrical current, voltage, or plumbing codes, commercial or industrial use, or use of accessories, components, or cleaning products that are not approved by LG Canada.
9. Damage caused by transportation and handling, including scratches, dents, chips, and/or other damage to the finish of your product, unless such damage results from defects in materials or workmanship and is reported within one (1) week of delivery.
10. Damage or missing items to any display, open box, discounted, or refurbished Product.
11. Products with original serial numbers that have been removed, altered, or cannot be readily determined. Model and Serial numbers, along with original retail sales receipt, are required for warranty validation.
12. Increases in utility costs and additional utility expenses.
13. Replacement of light bulbs, filters, or any consumable parts.
14. Repairs when your Product is used in other than normal and usual household use (including, without limitation, commercial use, in offices or recreational facilities) or contrary to the instructions outlined in the Product owner's manual.
15. Costs associated with removal of the Product from your home for repairs.
16. The removal and reinstallation of the Product if it is installed in an inaccessible location or is not installed in accordance with published installation instructions, including the Product owner's and installation manuals.
17. Shelves, door bins, drawers, handles, and accessories to the Product. Also excluded are parts besides those that were originally included with the Product.

All costs associated with the above excluded circumstances shall be borne by the consumer.

For complete warranty details and customer assistance, please call or visit our website: Call 1-888-542-2623 (24 hours a day, 365 days a year) and select the appropriate option from the menu, or visit our website at **http://www.lg.ca**

Write your warranty information below: _____

Product Registration Information: _____

Model: _____ **Serial Number:** _____

Date of Purchase: _____

NOTES