DAEWOO ELECTRONICS

SERVICE MANUAL NO-FROST COMBI-REFRIGERATOR



MODELS:

ENERGY UPGRADE

- ERF-36.A..EU
- ERF-38.A..EU
- ERF-39.A..EU
- ERF-41.A..EU

ISOBUTANE (R-600)

- ERF-36.AR
- ERF-38.AR
- ERF-39.AR
- ERF-41.AR

DAEWOO ELECTRONICS MANUFACTURING ESPAÑA S.A 2003

CONTENTS

- *Precautions..... 3*
- *Models equivalence remark..... 4*
- *Differences between ..4A and ..4..EU..... 4*
- *Specifications..... 5*
- *Wiring diagrams..... 6*
- *External drawing..... 8*
- *C/P difference betwenn ..4A and ..4A..EU..... 8*
- *Air flow diagram..... 9*
- *Refrigerant cycle diagram..... 10*
- *Machine room view..... 11*
- *Main pcb diagrams..... 12*
- *Components disassembly pictures..... 16*
- *Components specifications..... 24*
- *Explode drawings..... 26,30,34,38*
- *Parts list..... 28,32,36,40*
- *Parts list of colour components..... 42*
- *Pcb control functions..... 44*

TYPES OF THE APROVED SAFETY STANDARDS

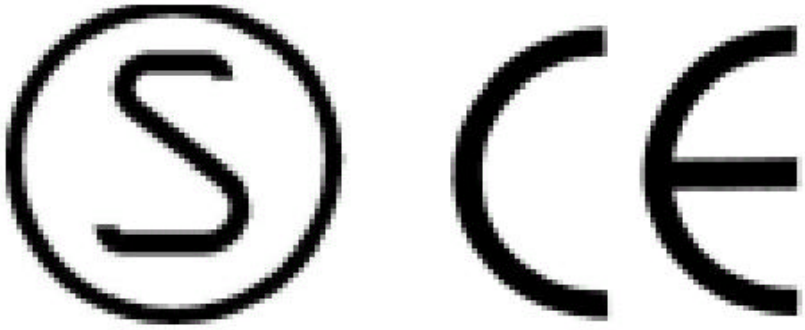

PRECAUTIONS




- CAUTION WHEN YOU REPLACE THE COMPRESSOR:

- Do not smoke.Remove all the possible ignition sources and then replace compressor in well-aired places.
- Don´t use welding machines if R600a refrigerant does not exposed.
- In the case of gas leakage, always open the window.
- When cutting the SUCTION, DISCHARGE pipe of compressor, always take caution of the inner pressure of the remai ning gas.

- TAKE OUT POWER PLUG:

- Always take out the power plug from the outlet when doing repairs.

- BE CAREFUL OF ELECTRIC SHOCKS:

- When inspecting the circuit be careful of electric shocks.

- USE PROPER COMPONENTS:

- Always use the component labeled in the service component chart when replacing components for repairs.

- USE PROPER TOOLS:

- Always use proper tools for repairs. If worn out tools are used, it would cause defects in tunning and electrical contact, leading to accidents.

- When doing repairs inspect the **POWER CORD** or whether there is fire in the lead wire and make sure they are replaced.

- CUTTING OF LEAD-WIRE:

- For connecting the lead-wire that has been cut off, use soldering or connector and always disconnect the vinyl tapes.

- CHECK FOR DISCONNECTION:

- After completing the assembly, always measure the disconnection resistance level, and turn on the power after checking it is above 1 MOhm.

- EARTH:

- Check the status of earthing and repair the incomplete ones.

- BE CAREFULL OF CHILDREN:

- There is always the possibility of danger when doing repairs so make sure that children can´t come nearby.

- CLEANING:

- After completing repairs, clean the surrounding area and the refrigerator and tell the consumer about the repairs being made.

This appliance contains a small amount of refrigerant isobutane (R600a), natural gas with high enviromental compatibility but which is also combustible. When transporting and installing the appliance, care should be taken to ensure that no parts of the refrigerant circuit are damaged. Refrigerant squirting out of the pipes could ignite or cause an eye injury. If damage occurs nevertheless, avoid any flames or potential sources of ignition, and air the room in wich the appliance is standing for several minutes.



*** In order to avoid the creation of a flammable gas-air mixture if a leak in the refrigerating circuit occurs, the size of the room in wich the appliance may be sited depends upon the amount of refrigerant used. the room must be 1m3 in size for every 8g of refrigerant R600a inside the appliance is shown on the identification plate inside the appliance.**

*** Never start up an appliance showing any signs damage. If in doubt, consult your dealer.**

MODELS EQUIVALENCE REMARK

- Cosmetic differences, colour, ... relate to the model number. This manual refers to the standard models, but technical contents are similar for the rest of models. Standard models are:

ERF-364AR, ERF-384AR, ERF-394AR, ERF-414AR
ERF-367AR, ERF-387AR, ERF-397AR, ERF- 417AR

ERF-364A..EU, ERF-384A..EU, ERF-394A..EU, ERF-414A..EU
ERF-367A..EU, ERF-387A..EU, ERF-397A..EU, ERF- 417A..EU

DIFERENCES BETWEEN "ERF-..4A, ..7A" AND "ERF-..4..EU, ..7A..EU"

- These models are basically similar, but for improve the energy efficiency, some components have been changed:

- NEW PARTS FOR ERF-364A..EU, 384A..EU, 394A..EU, 414A..EU:

PCB MAIN AS: 30143B8060
PCB FRONT AS: 30143B6160
WINDOW C/PANEL L/L: 3015507220

- NEW PARTS FOR ERF-367A..EU, 387A..EU, 397A..EU, 417A..EU:

PCB MAIN AS: 30143B9060

- Wiring diagrams and pcb circuits have been changed but rest of components and specifications that don´t appear in this manual are similar to the previous models, so for another spare refer to ERF-..4A Service manual:



1. SPECIFICATIONS

Model name		ERF-364AR	ERF-384AR	ERF-394AR	ERF-414AR	ERF-367AR	ERF-387AR	ERF-397AR	ERF-417AR
Division		Automatic	Automatic	Automatic	Automatic	Digital	Digital	Digital	Digital
Refrigerant type		ISOBUTANE R-600							
Refrigerant Q´ty		65gr							
Blowing agent		C-PENTANE							
Cooling system		Fan cool system							
Defrost system		Automatic start & Automatic stop system							
Compressor		MK-490-L1U							
Rated voltage		AC220~240V / 50Hz							
Rated input (W)		130W							
Lamp rated input (W)		15W							
Gross capacity (liter)	Freezer	93	114	93	114	93	114	93	114
	Refrigerator	223	223	253	253	223	223	253	253
	Total	316	337	346	367	316	337	346	367
External dimension (mm)	Height	1780	1869	1911	2000	1780	1869	1911	2000
	Width	600	600	600	600	600	600	600	600
	Depth	636,7	636,7	636,7	636,7	636,7	636,7	636,7	636,7
Energy consumption	kwh/24h	0,98	1,032	1,026	1,077	0,98	1,03	1,03	1,08
	class	A							
Freezing capacity(kg/24h)		5							
Star rating		* ***							
Climate class		N							
Net weight (kg)		69	72	75	79	69	72	75	79

Model name		ERF-364A/EU	ERF-384A/EU	ERF-394A/EU	ERF-414A/EU	ERF-367A/EU	ERF-387A/EU	ERF-397A/EU	ERF-417A/EU
Division		Automatic	Automatic	Automatic	Automatic	Digital	Digital	Digital	Digital
Refrigerant type		R-134A							
Refrigerant Q´ty		100gr							
Blowing agent		C-PENTANE							
Cooling system		Fan cool system							
Defrost system		Automatic start & Automatic stop system							
Compressor		HPL17YH-5							
Rated voltage		AC220~240V / 50Hz							
Rated input (W)		135W							
Lamp rated input (W)		15W							
Gross capacity (liter)	Freezer	93	114	93	114	93	114	93	114
	Refrigerator	223	223	253	253	223	223	253	253
	Total	316	337	346	367	316	337	346	367
External dimension (mm)	Height	1780	1869	1911	2000	1780	1869	1911	2000
	Width	600	600	600	600	600	600	600	600
	Depth	636,7	636,7	636,7	636,7	636,7	636,7	636,7	636,7
Energy consumption	kwh/24h	0,98	1,02	1,025	1,06	0,98	1,02	1,025	1,06
	class	A							
Freezing capacity(kg/24h)		5							
Star rating		* ***							
Climate class		N							
Net weight (kg)		69	72	75	79	69	72	75	79

2. WIRING DIAGRAMS

2.1- ERF-364A..EU, ERF-384A..EU, ERF-394A..EU, ERF-414A..EU

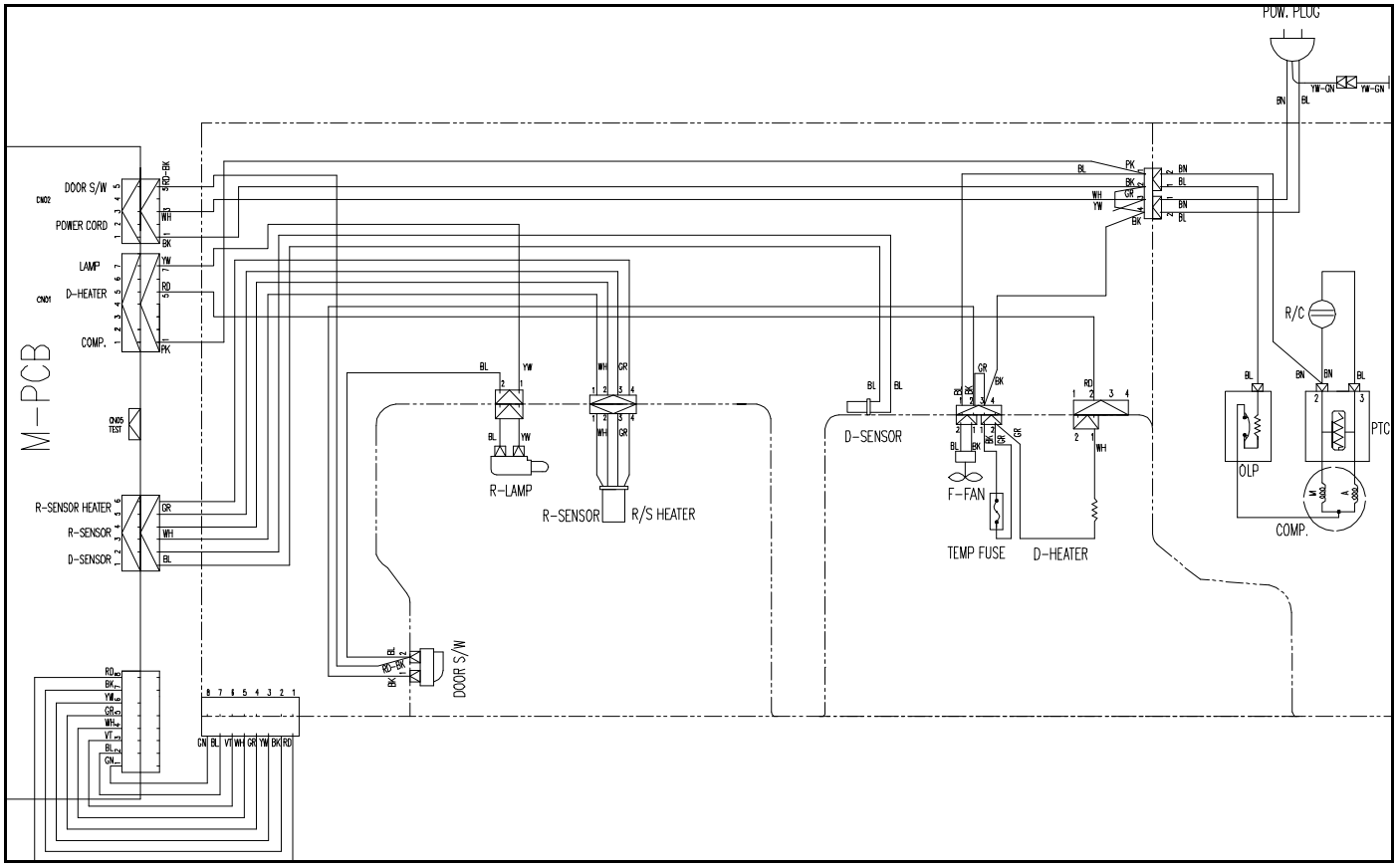

2.2- ERF-367A..EU, ERF-387A..EU, ERF-397A..EU, ERF-417A..EU

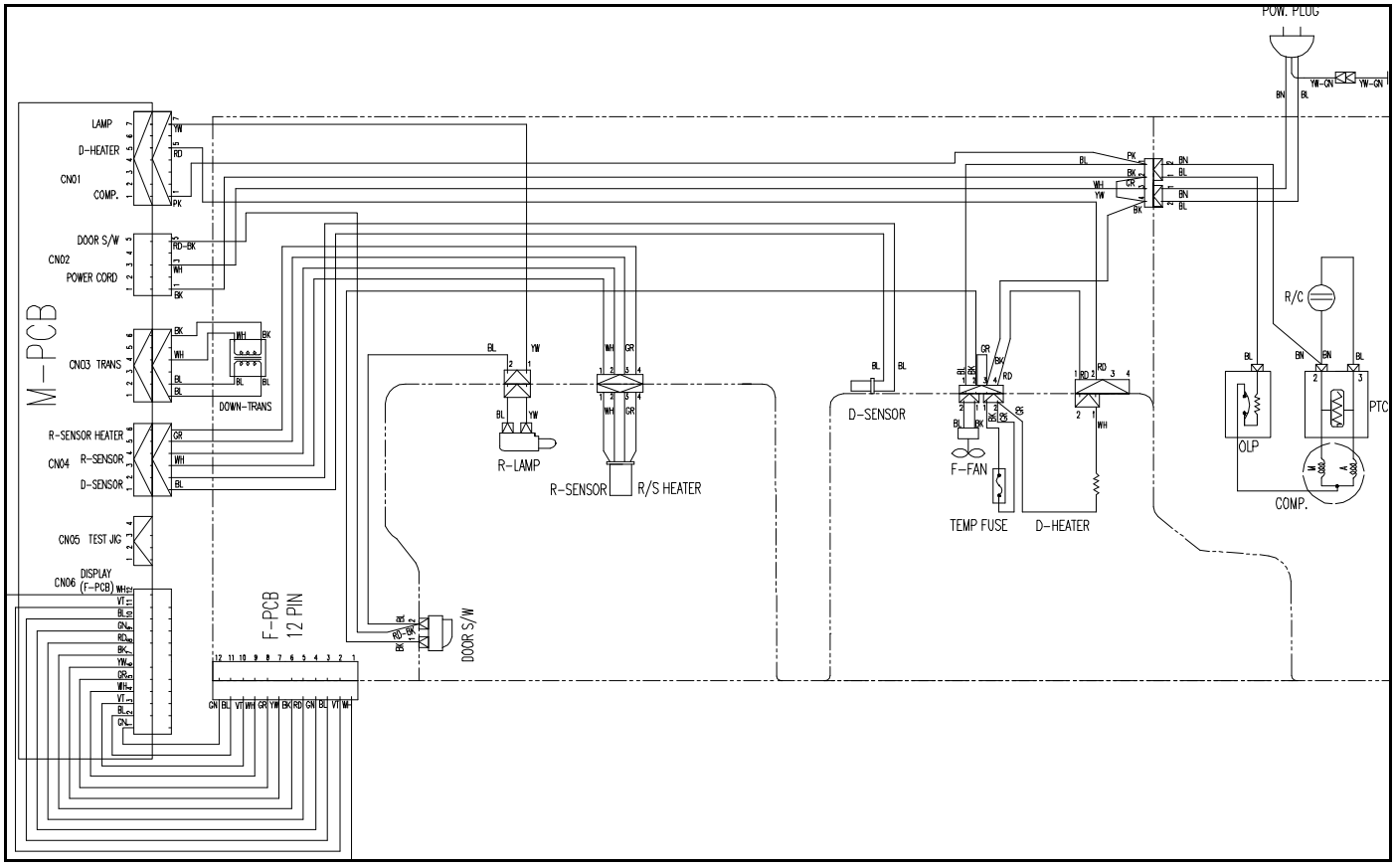

2.3- ERF-364AR, ERF-384AR, ERF-394AR, ERF-414AR

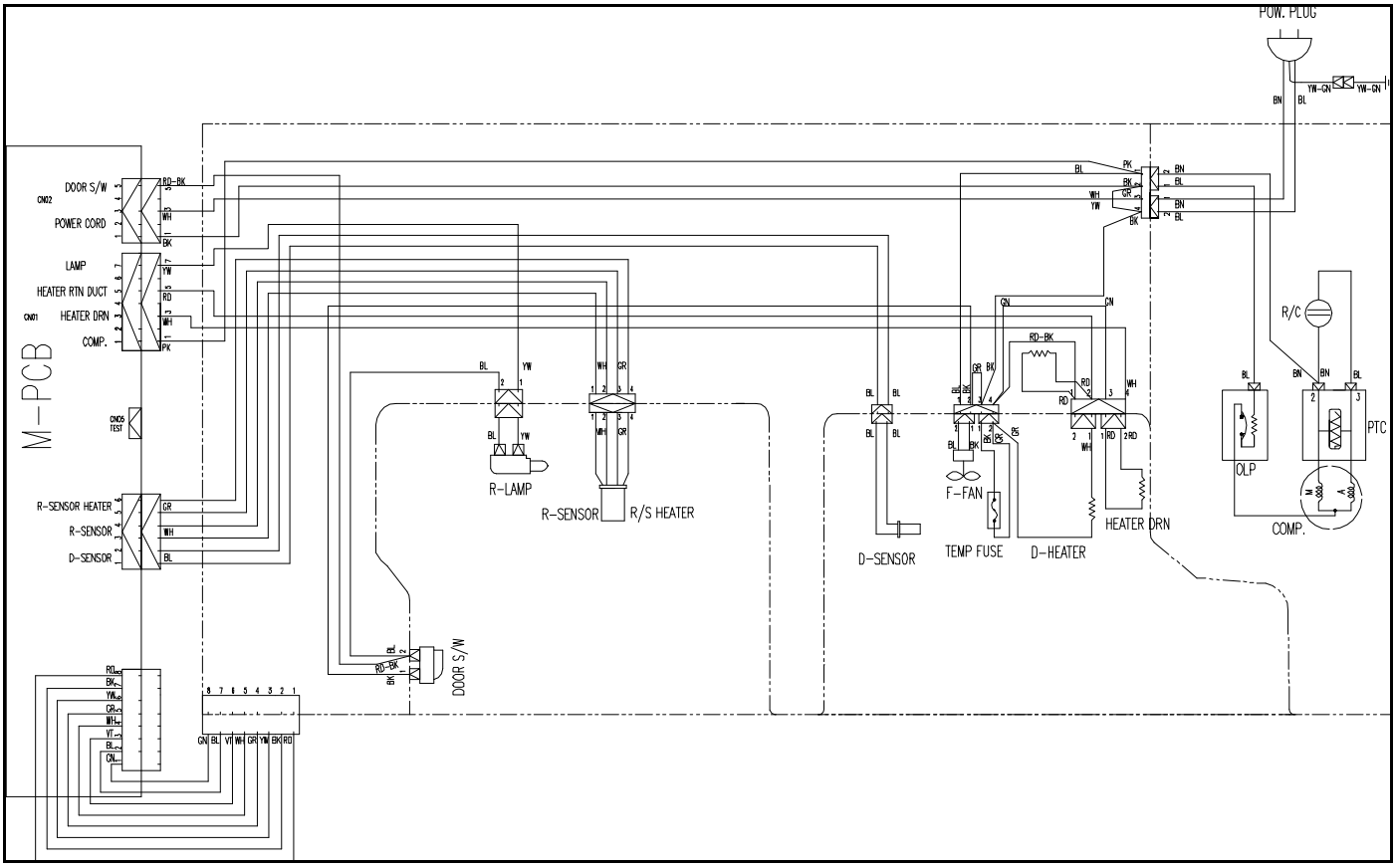

2.4- ERF-367AR, ERF-387AR, ERF-397AR, ERF-417AR

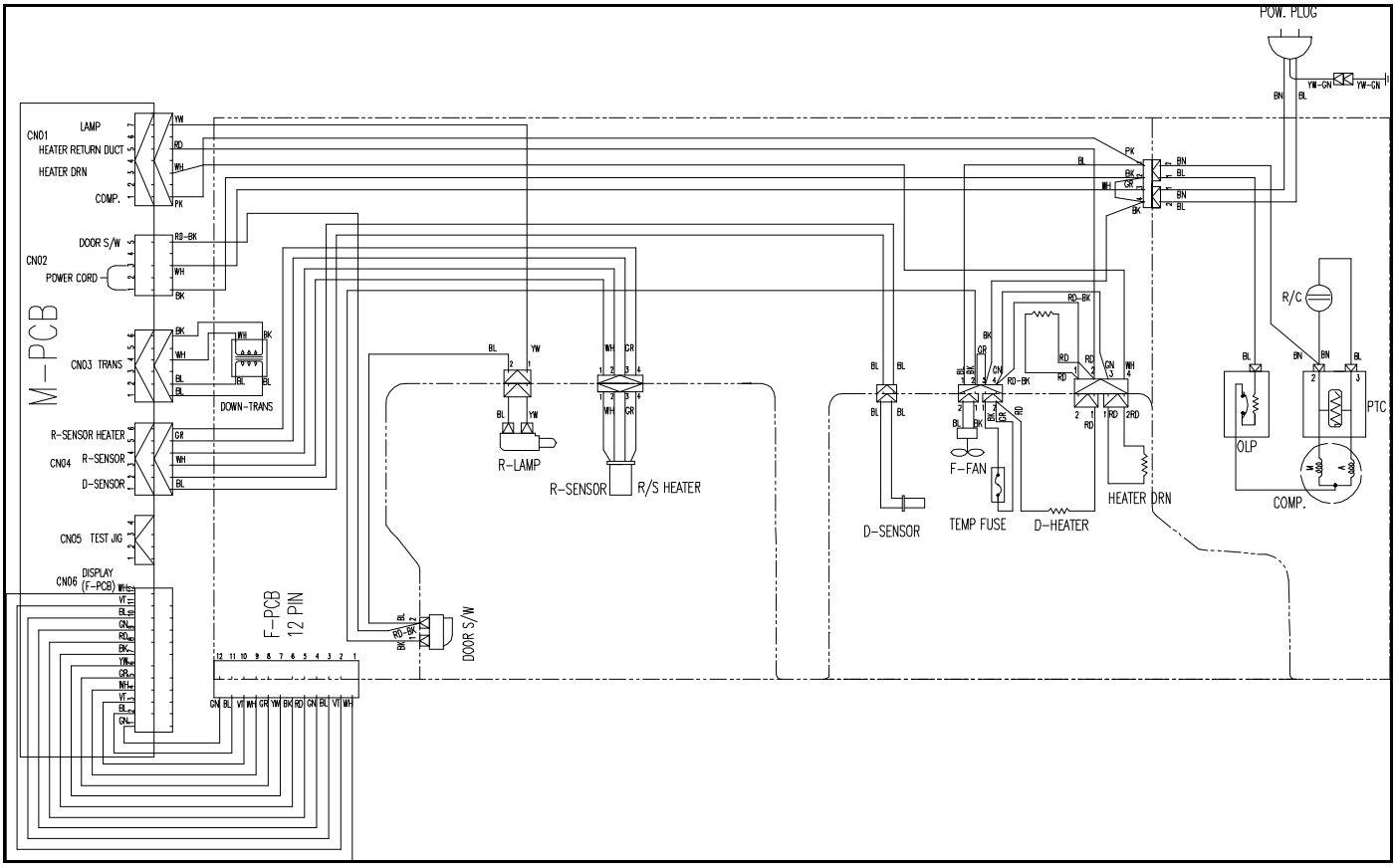

3-EXTERNAL DRAWING

3.2- ALL MODELS

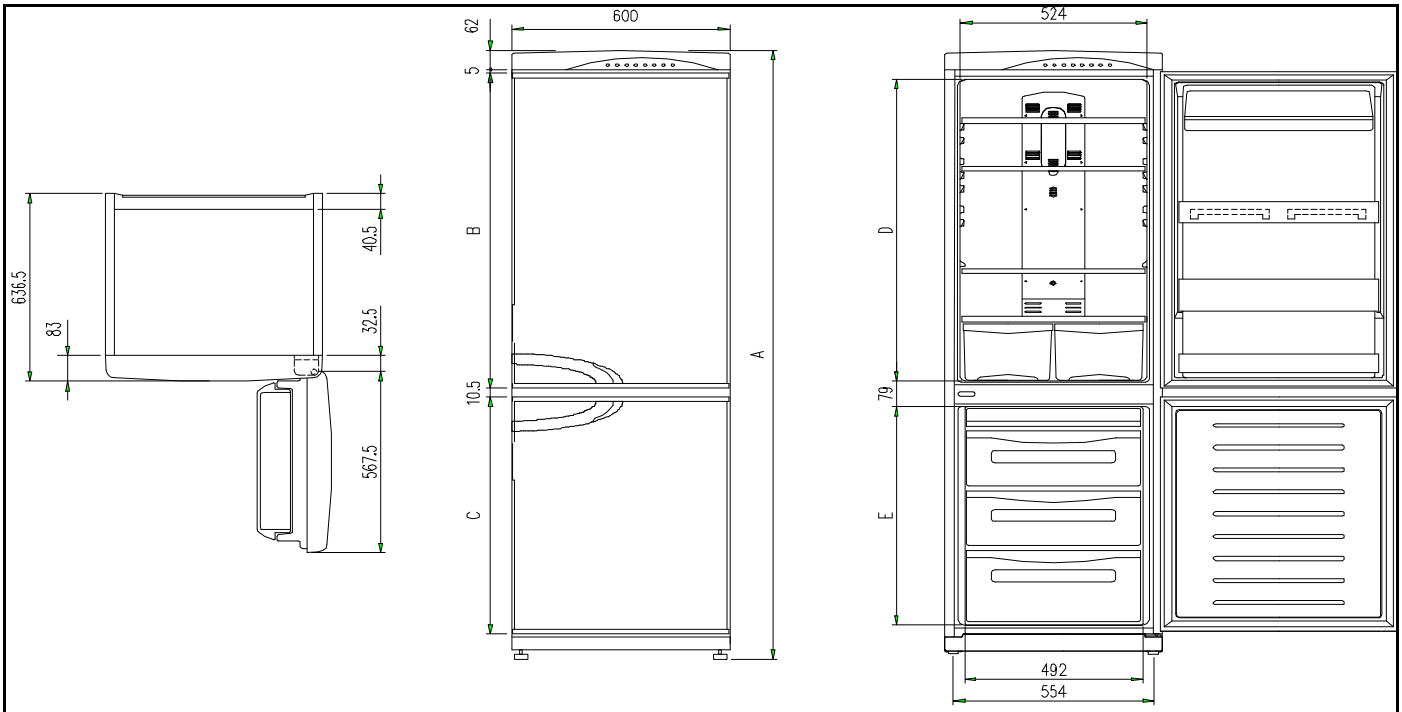

MODEL	A	B	C	D	E	REMARK
ERF-364/7A(M)	1780	931	698	862.5	621.5	
ERF-384/7A(M)	1869	931	787	862.5	710.5	
ERF-394/7A(M)	1911	1062	698	993.5	621.5	
ERF-414/7A(M)	2000	1062	787	993.5	710.5	

4- C/P DIFFERENCE BETWEEN ERF-...A AND ERF-...A..EU

ERF-...A

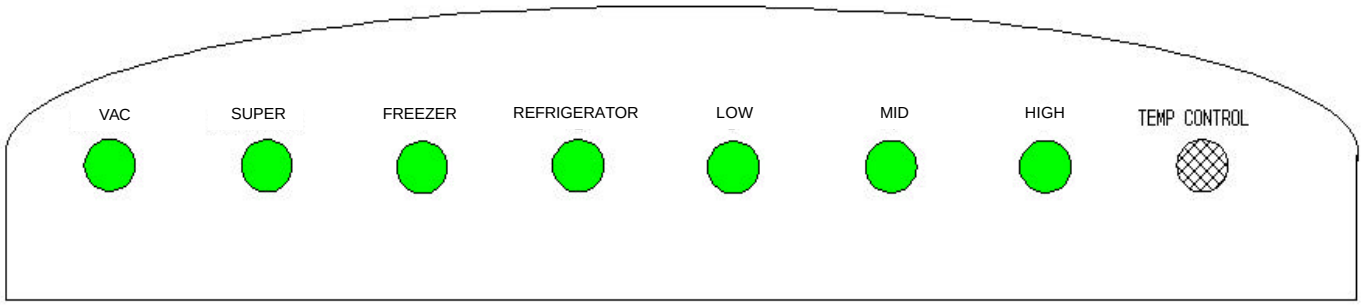

ERF-...A...EU

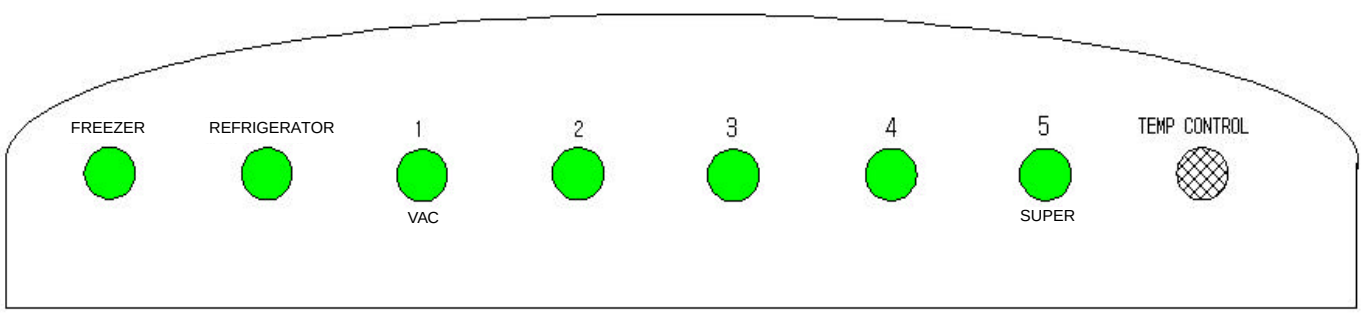

5. AIR FLOW DIAGRAM

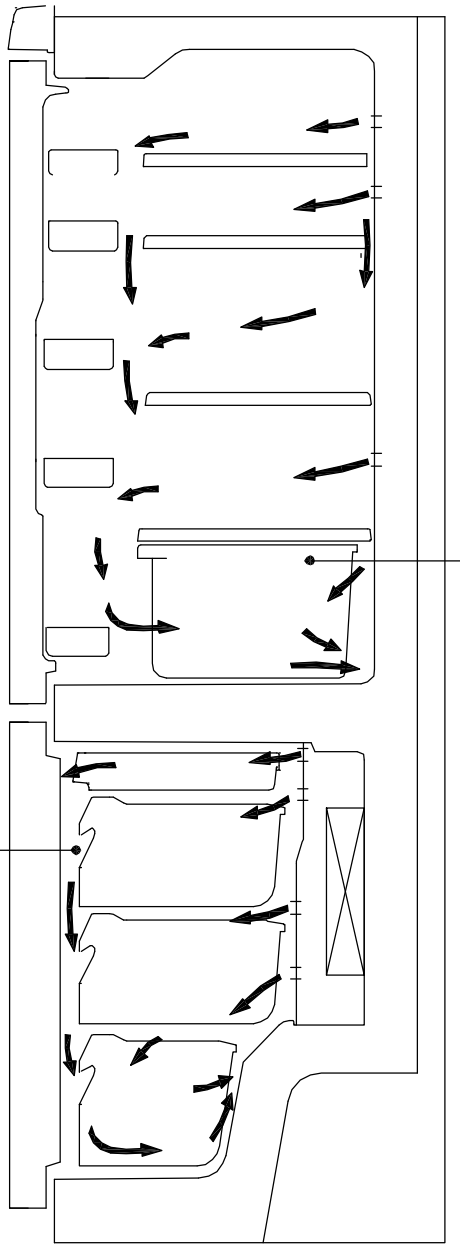

REFRIGERATOR ROOM:
Do not place frozen food near the duct.
It may freeze due to low temperature

CASE VEGETABLES:
Suitable for storing fruits or vegetable

AIR CIRCULATION IN THE FREEZER COMPARTMENT:
Cold air flow out from the upper front duct and passes into the lower duct

FREEZER ROOM:
Do not put in any bottles containing liquids such as beer or beverages because they may freeze and break

6. REFRIGERANT CYCLE DIAGRAM

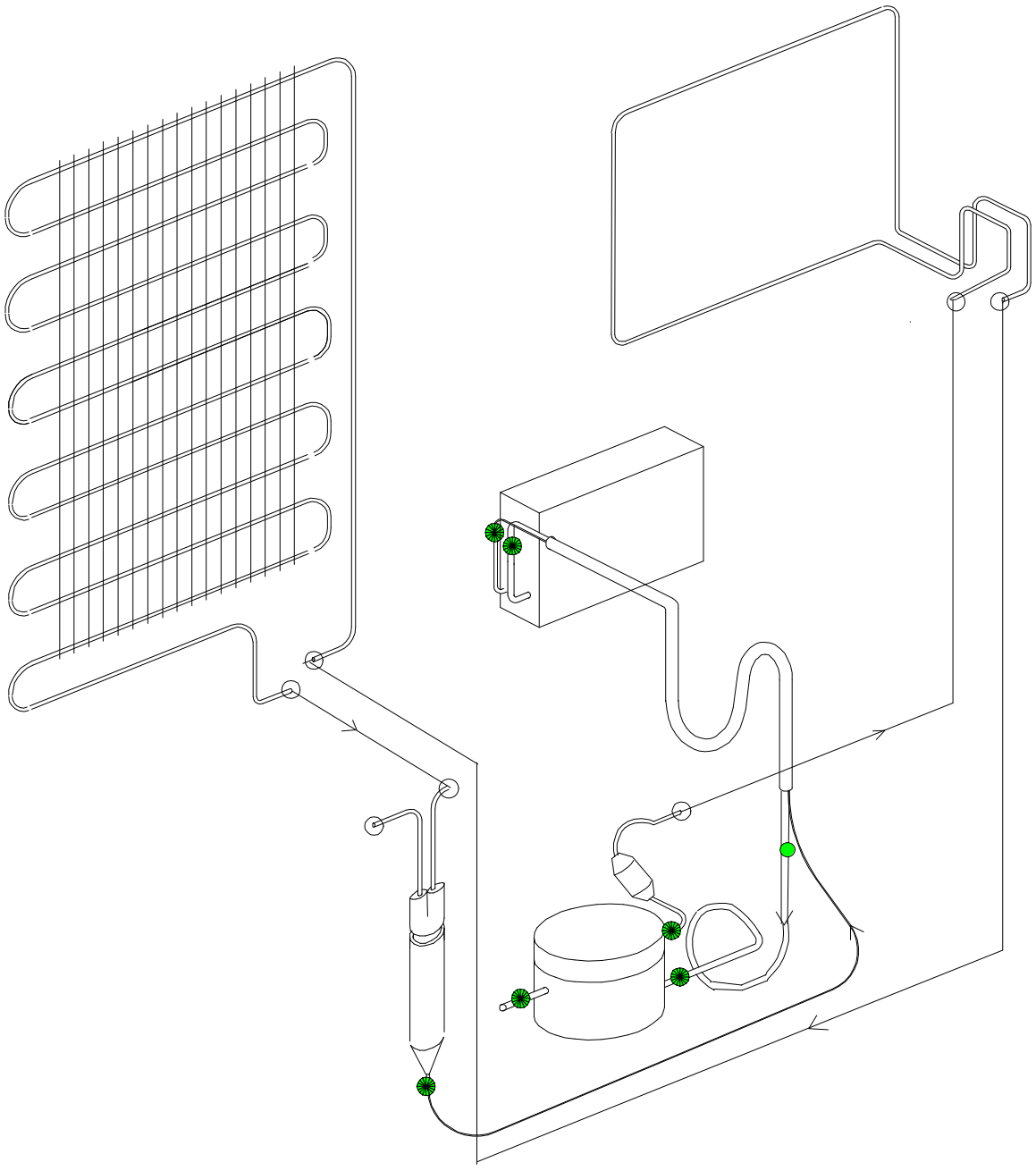

**COMPRESSOR => MUFFLER AS => HOT PIPE => WI-CON PIPE =>
DRYER => CAPILLARY TUBE => EVAPORATOR => SUCTION PIPE =>
=> COMPRESSOR**

7- MACHINE ROOM VIEW

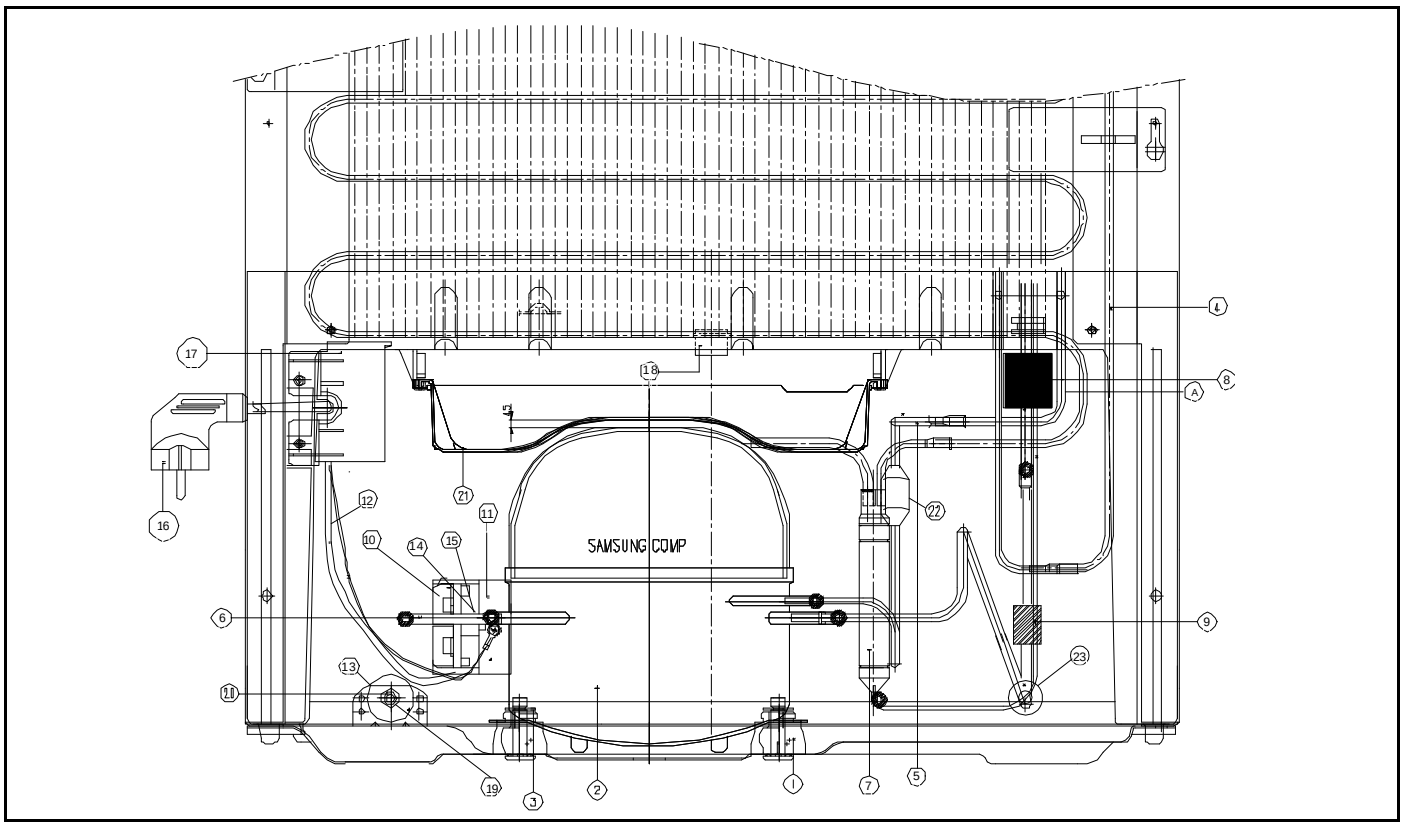

No.	PART NAME	No.	PART NAME
A	PIPE HOT	12	HARNESS RELAY
1	ABSORBER COMP.	13	CAPACITOR RUN AS
2	COMPRESSOR	14	S/W P RELAY PTC
3	FIXTURE COMP.	15	S/W P RELAY OL
4	PIPE Wi-CON AS	16	CORD POWER AS
5	PIPE CONN B	17	COVER ME HOUSING
6	PIPE CHARGE	18	CAP DRAINER
7	DRYER AS	19	SPECIAL WASHER R/C
8	ABSORBER PIPE B(GUM)	20	SPECIAL NUT R/C
9	ABSORBER PIPE C	21	CASE VAPORI
10	BOX RELAY AS	22	MUFFLER AS
11	CHASSIS T-BOARD AS	23	MUFFLER B AS

8- MAIN PCB DIAGRAMS

8.1- ERF-364A..EU, ERF-384A..EU, ERF-394A..EU, ERF-414A..EU

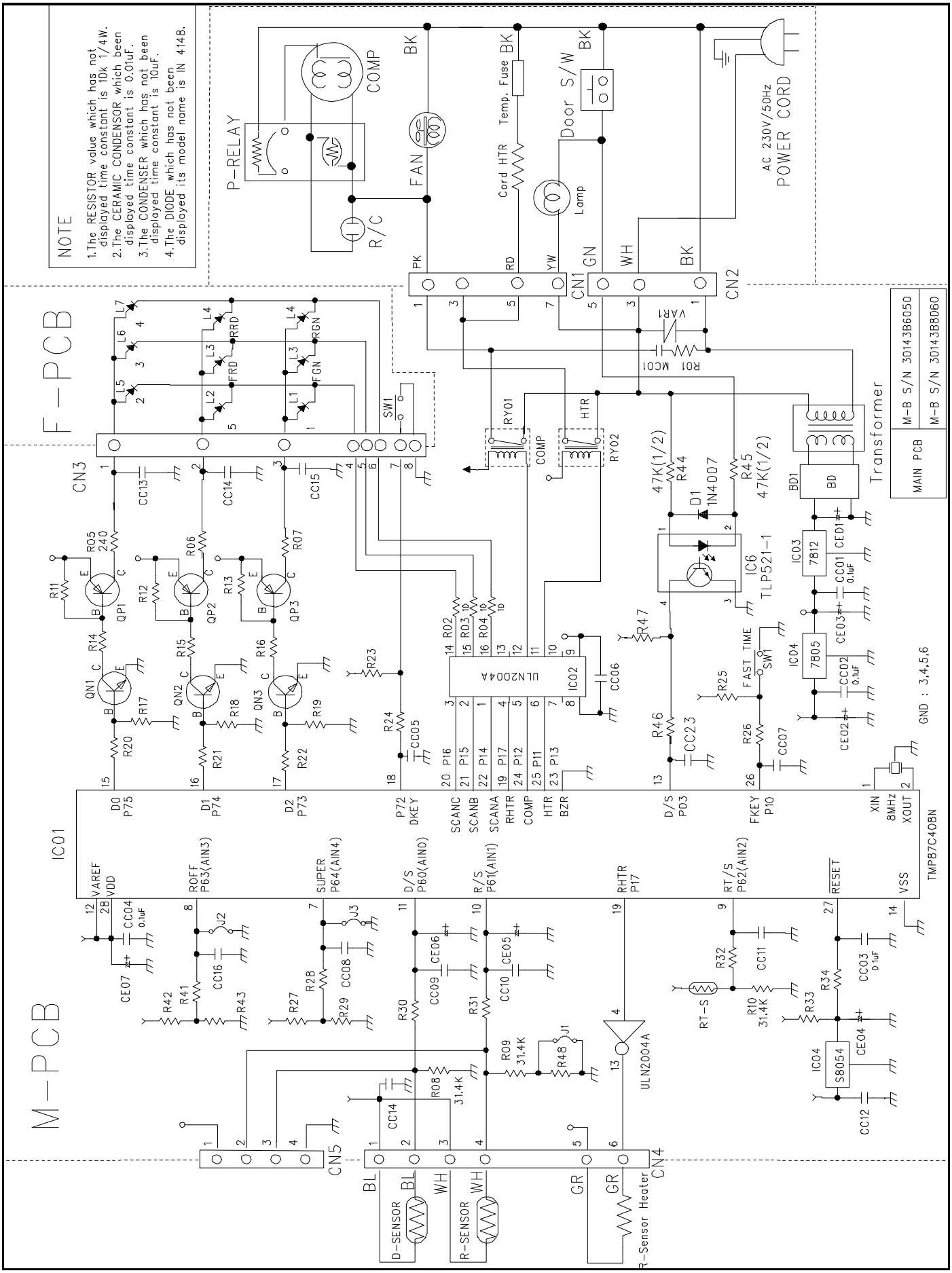

8.2- ERF-367A..EU, ERF-387A..EU, ERF-397A..EU, ERF-417A..EU

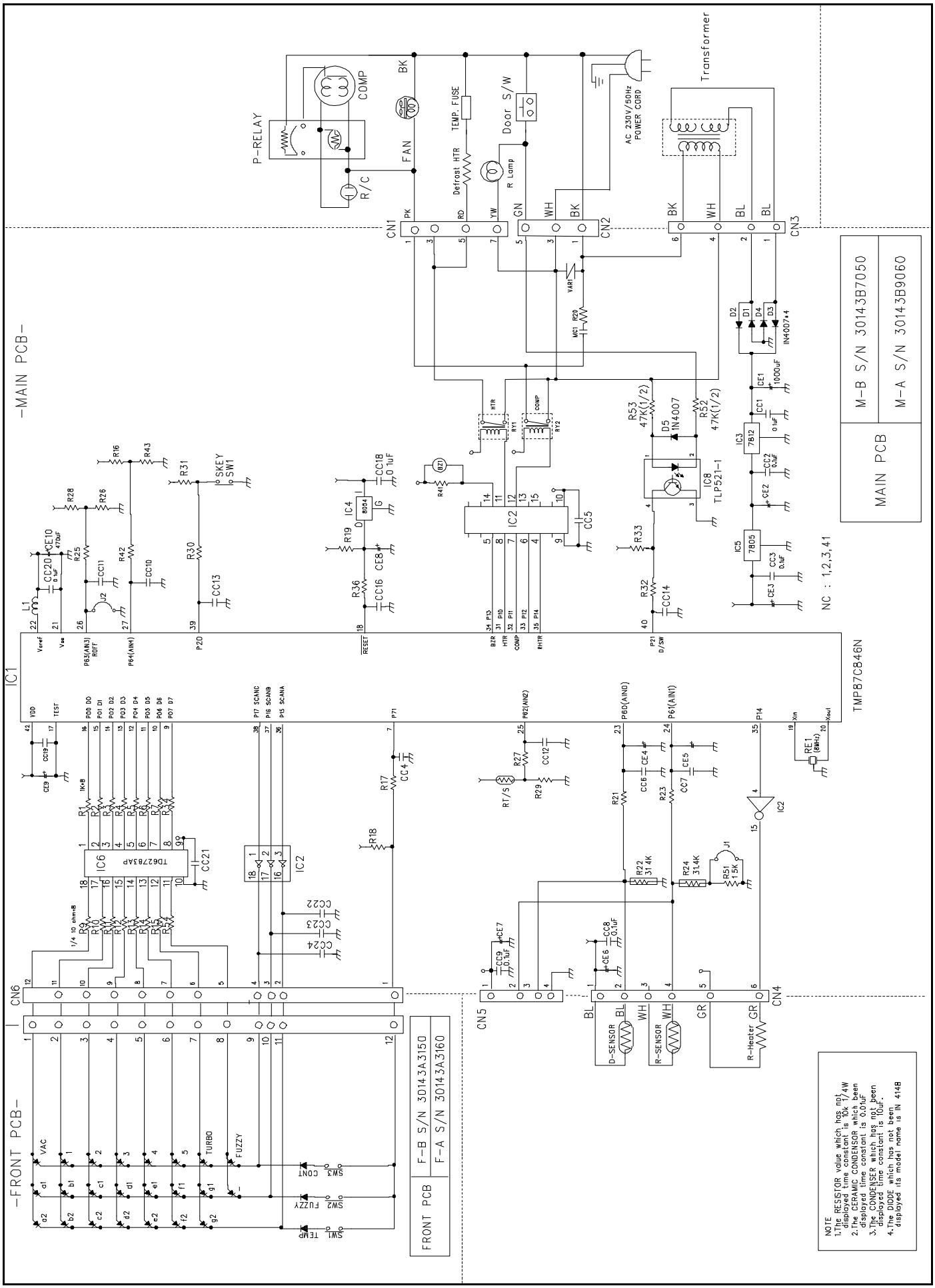

8.3- ERF-364AR, ERF-384AR, ERF-394AR, ERF-414AR

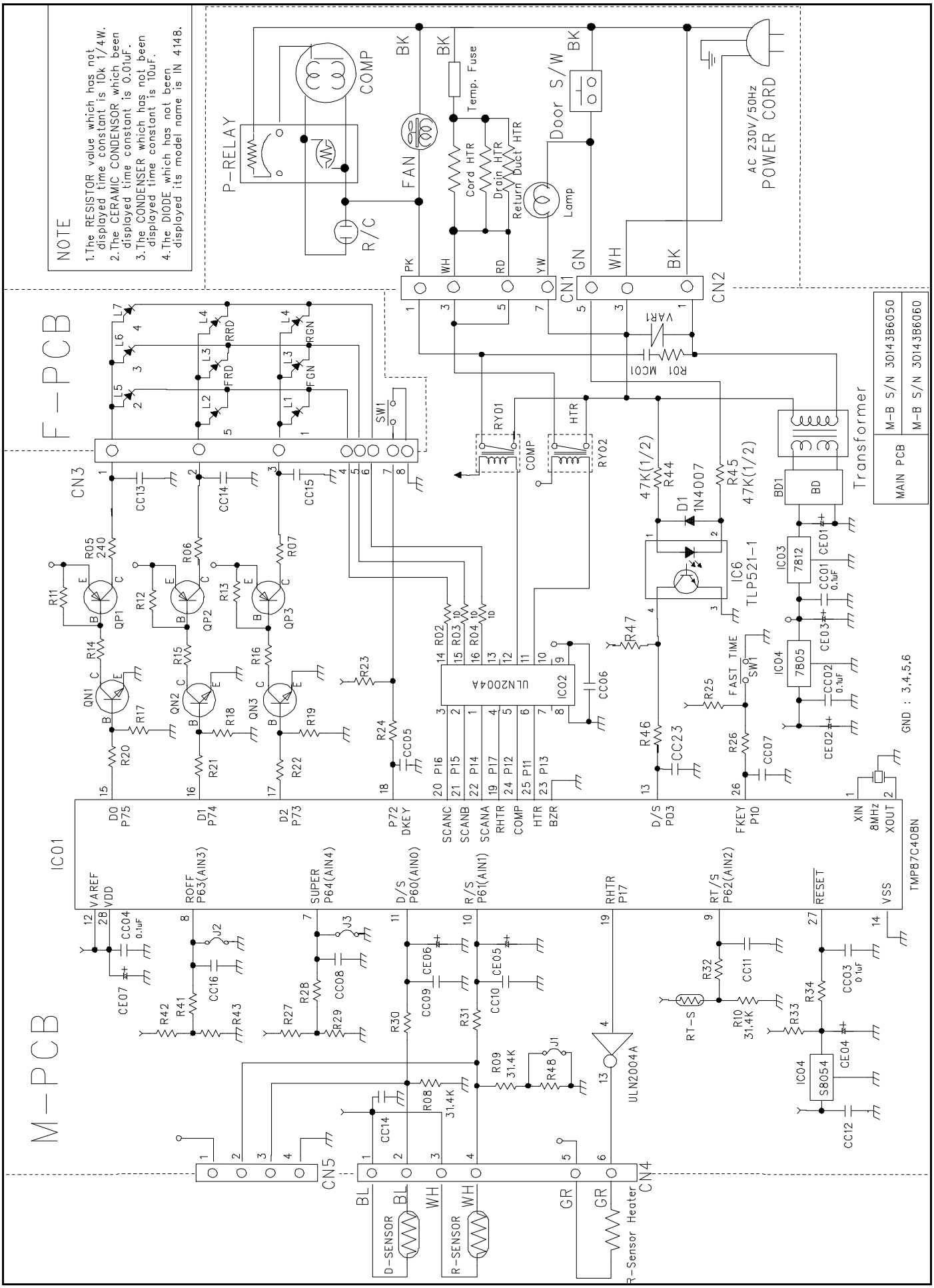

8.4- ERF-367AR, ERF-387AR, ERF-397AR, ERF-417AR

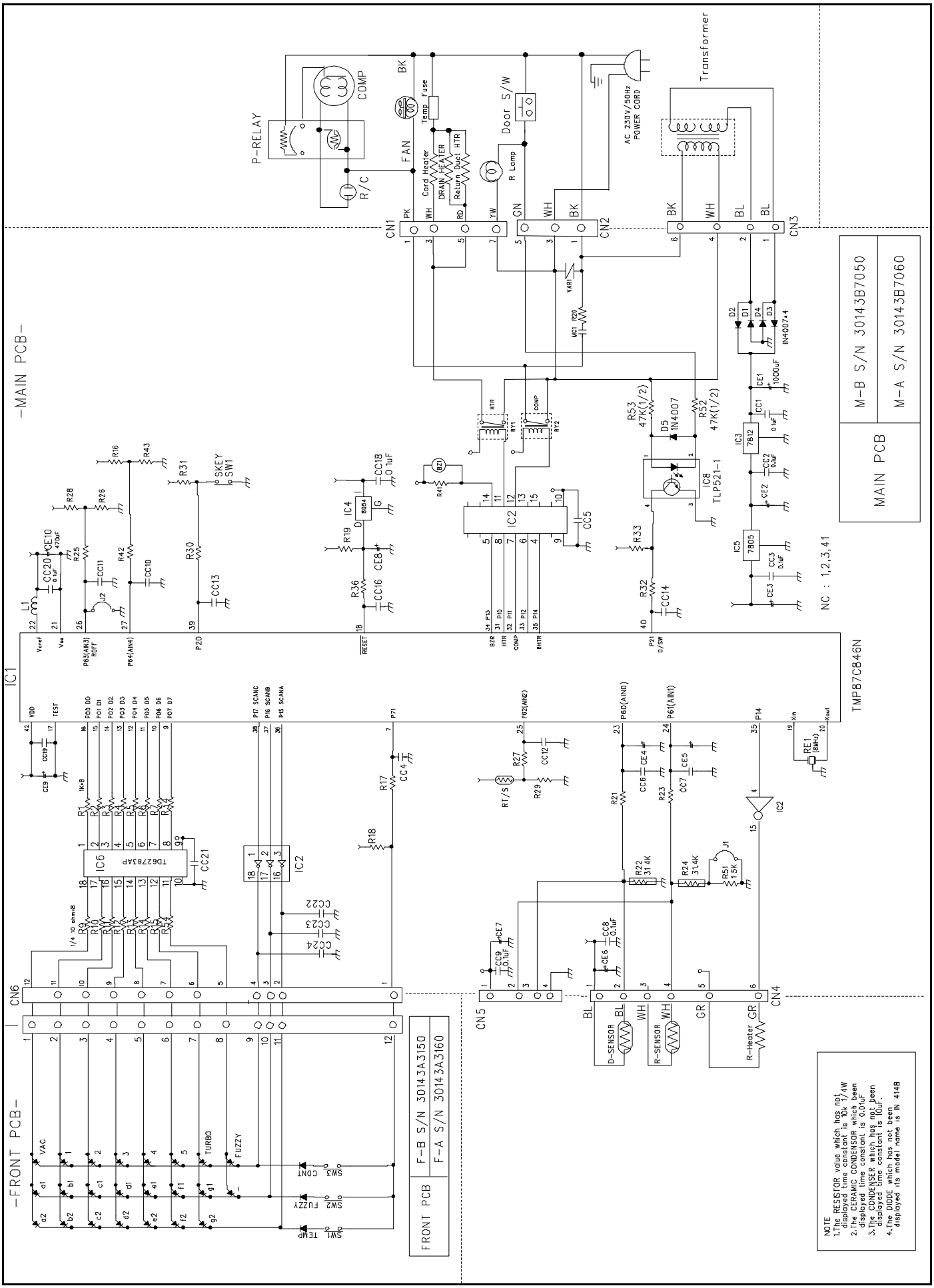

9. COMPONENTS DISASSEMBLY PICTURES

1-CONTROL PANEL

1.1- Take out control panel by pulling it up and inserting a minus driver like picture shows, and move it left-right.

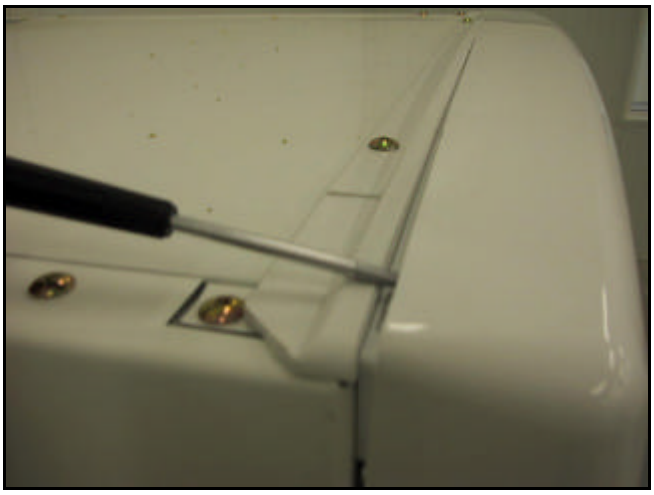

1.2- Disconnect F-Pcb harness and switch lamp.

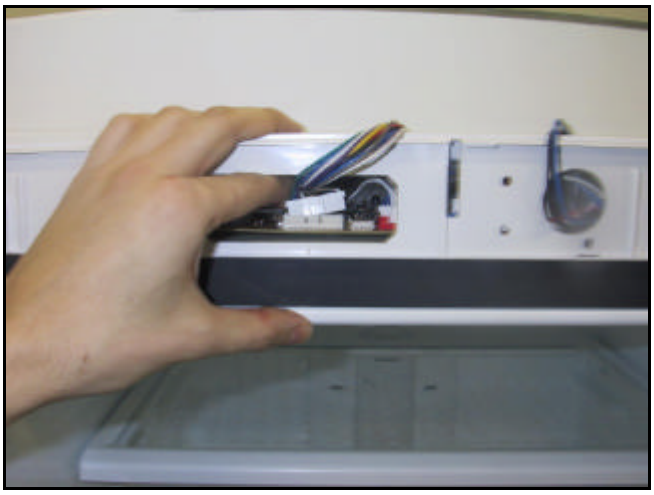

1.3- Remove 2 upper screws to take out base control panel.

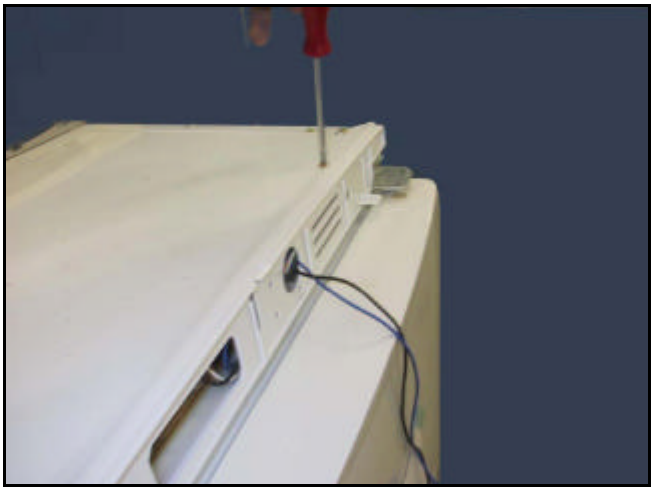

1.4- Dettach all connectors of M-Pcb and remove it.



1.5- Unscrew transformer.

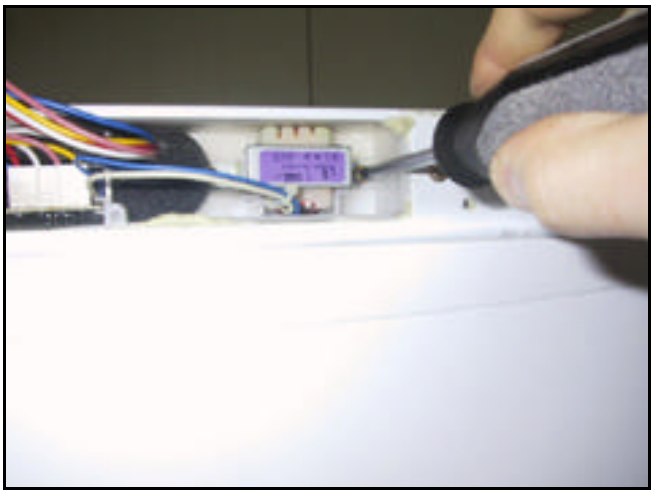

2- COVER MULTI-DUCT.

2.1- Remove window lamp by pushing lower part and pulling forward.



2.2- Remove 3 fixing screws.



2.3- Pull forward with snap force.



2.4- Remove lamp socket harness and R-Sensor harness by pressing the housings.



2.5- Remove insulator multi-duct.

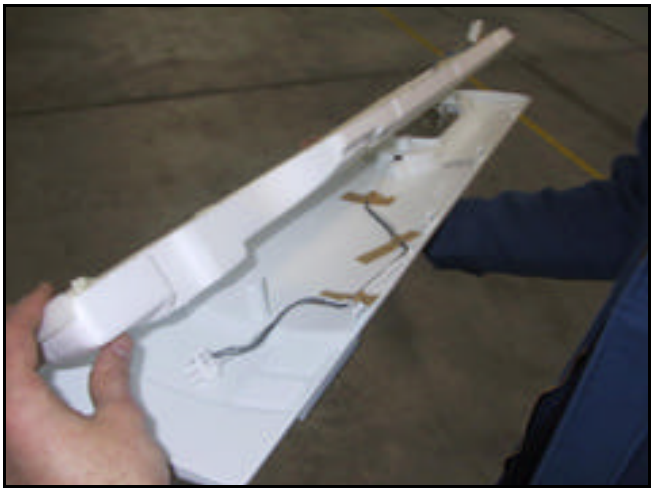

2.6- Disassemble lamp socket unscrewing it.



3- GASKET.

3.1- Take out the gasket as shown.



3.2- Fix the new one.

4- FREEZER COMPARTMENT.



4.1- Remove 3 fixing screws.

4.2- To prevent damage, remove louver using method as illustrated.





4.3- Remove 2 fixing screws of louver FB.



4.4- Take out louver FB by hand, and disconnect fan motor housing.



4.5- Disconnect all housing conectors.



4.6- Unscrew evaporator and move it carefully to prevent excessive bending of gas pipes.



4.7- To replace fuse temp.

- Take out fuse temp from the left part of evaporator and cut black and grey wires.



- Join cut wires with the new fuse wires.

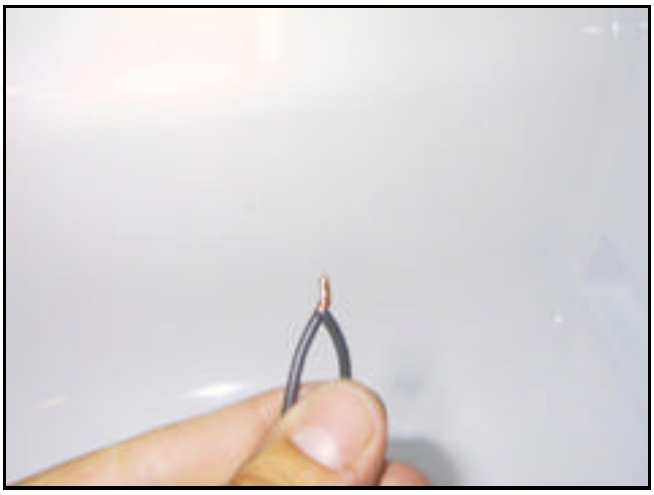

- Cover joint point with insulated tape (best way is heat shrink tube).

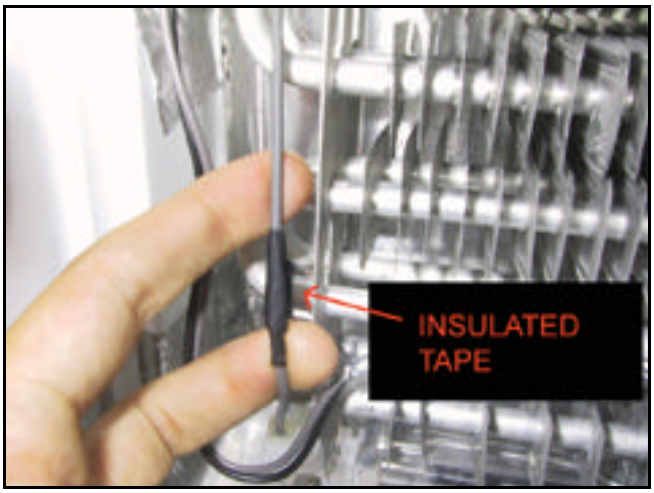

4.8- To replace D-Sensor.

- Take out D-Sensor from the lower part of evaporator cutting cable tie.

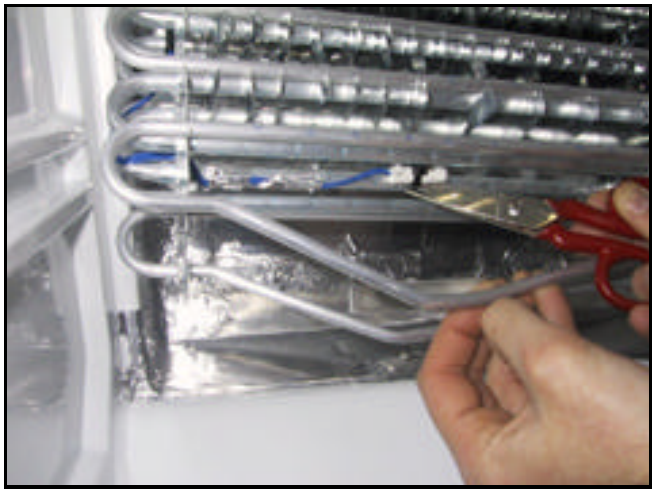

- Cut the two blue wires and join the new senser same like fuse temp process.



*** <u>WARNING</u>: When a component in the fridge compartment is changed, it is very important to check that there are no wires touching the evaporator heater..**

(check D-Sensor wires assy in the picture)

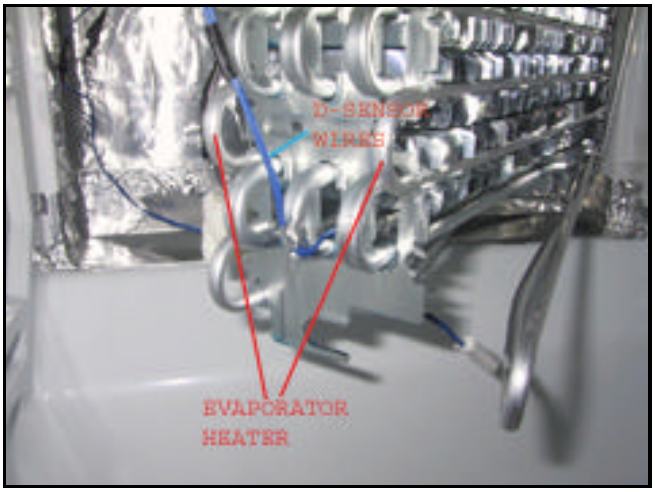

4.9- Disassembly system of guide drainer heater cord:

- Cut aluminium tape of guide drainer borders.

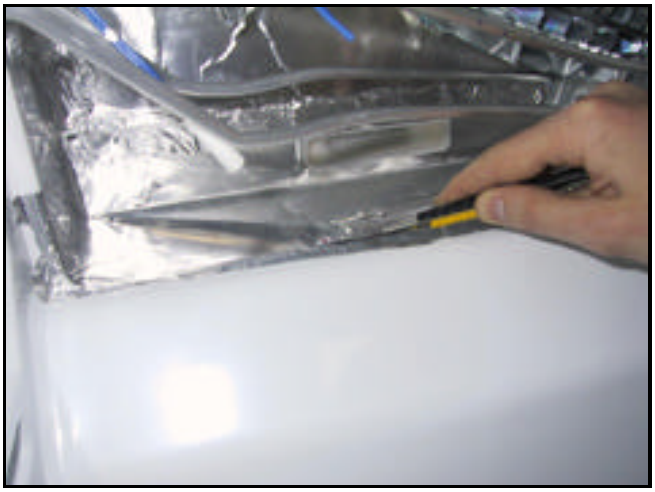

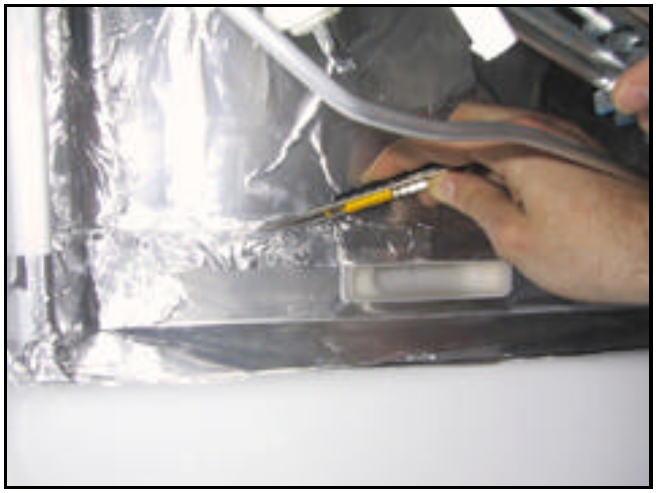

- Take out guide drainer carefully

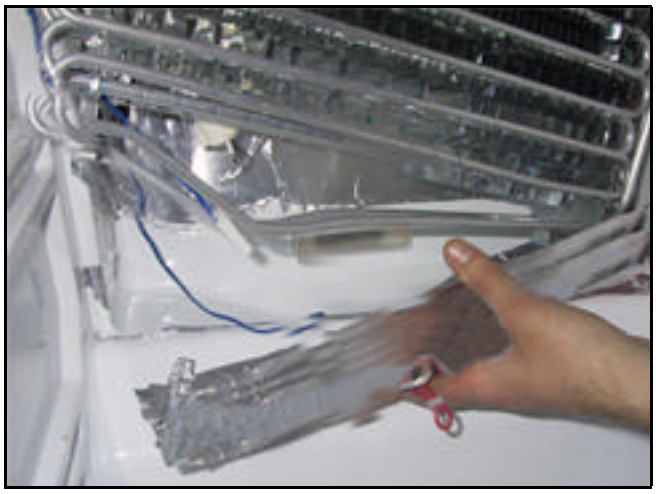

*** <u>WARNING</u>: Excessive move ments of the evaporator during operation could be produce gas leakages.**



- Disattach wires pulling them.



5-RELAY BOX.

5.1- Insert a screw driver like picture, and move it until locking section released.



6- VAPORY CASE.

6.1- Lift up drain case for disassemble guide lockers and pull it out.



10. COMPONENTS SPECIFICATIONS

1. COMPRESSOR

MODELS	ERF-3..AR
Part Name	MK-490Q-L1U
Rated Voltage	AC220~240
Starting Type	RSCR
Refrigerant	R-600a

2. PTC

MODELS	ERF-3..AR
Specification	47 Ohms

3. OLP

MODELS	ERF-3..AR
Specification	4TM189MHBYY-53

4. RUNNING CAPACITOR

MODELS	ERF-3..AR
Specification	5 uF/400V AC

5. FAN MOTOR AS

MODELS	ERF-3..AR
Specification	2500 R.P.M 230V AC/ 50 HZ

6. CORD HEATER L (EVAPORATOR HEATER)

MODELS	ERF-3..AR
Specification	230V/150W

7. HEATER DRAIN

MODELS	ERF-3..AR
Specification	230V/35W

8. LAMP

MODELS	ERF-3..AR
Type	Pygmy
Specification	AC230V, 15W

9. SWITCH LAMP

MODELS	ERF-3..AR
Specification	250V/0.25A

10. SOCKET LAMP

MODELS	ERF-3..AR
Type	A-800
Specification	AC 250V / 0,5A, E14

11. FUSE TEMPERATURE

MODELS	ERF-3..AR
Type	DF77S
Specification	AC250V, 77 ºC

11. SENSOR R AS

MODELS	ERF-3..AR
Type	NBC-K43-D21
Specification	R=30 Kohms 30 +/- 3 percent 0ºC

13. SENSOR D AS

MODELS	ERF-3..AR
Type	NBC-K43-D24
Specification	R=30 Kohms 30 +/- 3 percent 0ºC

11. EXPLODE DRAWINGS

11.1- ERF-364AR, ERF-394AR, ERF-414AR

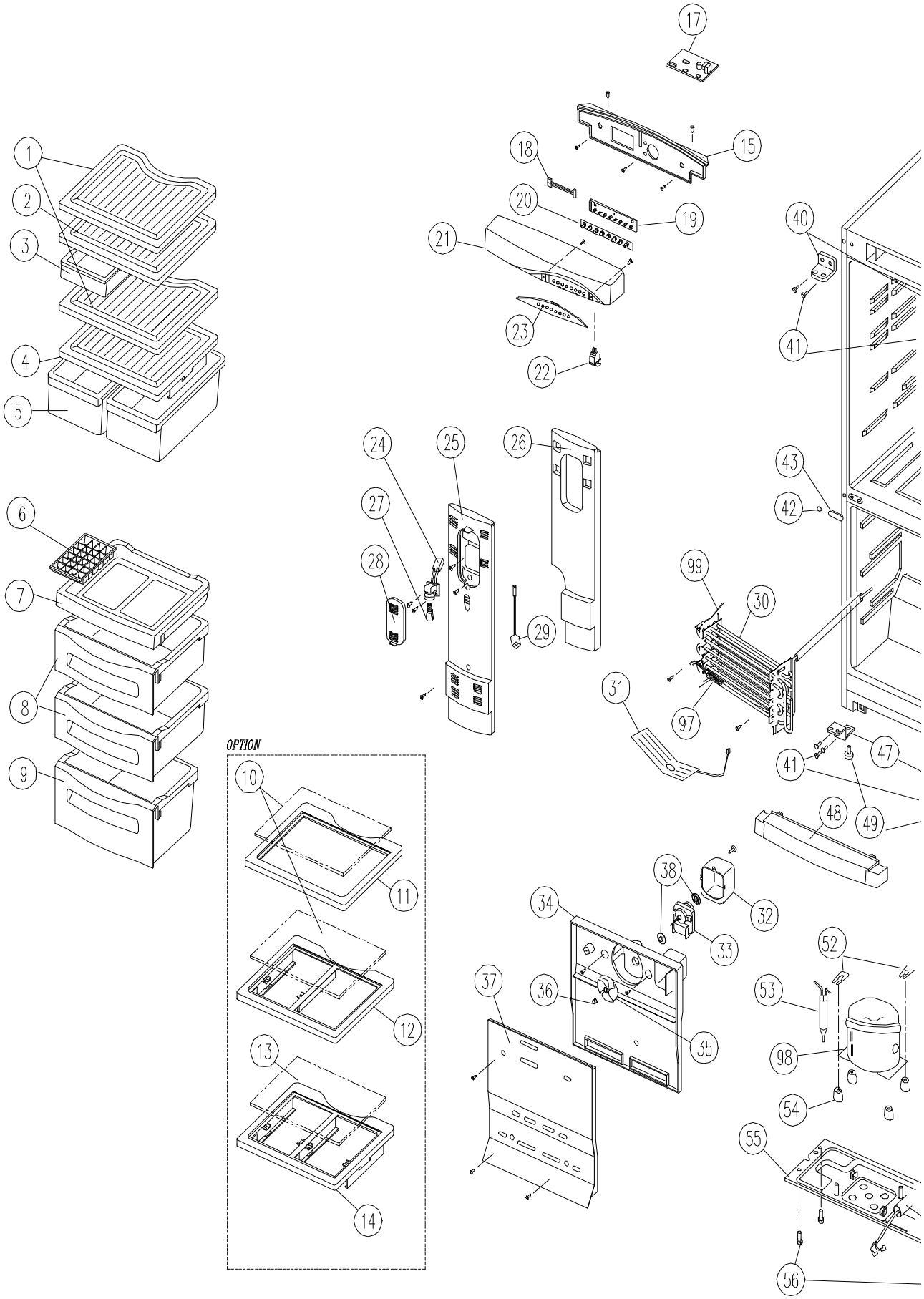

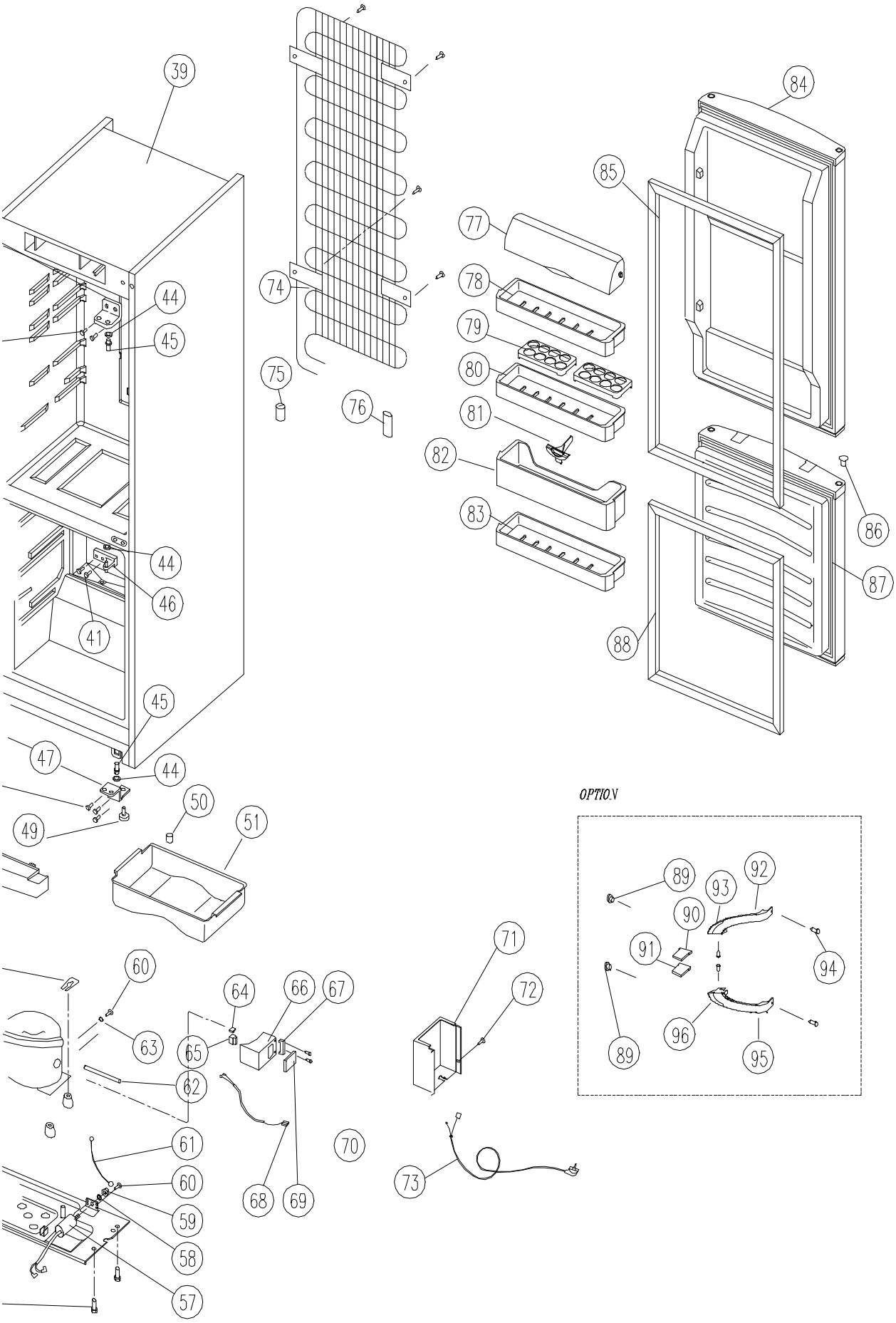
39
74
75
76
84
85
77
78
79
80
81
82
83
86
87
88
44
45
46
41
47
49
50
51
OPTION
89
92
93
90
91
94
96
95
60
64
66
67
63
65
62
61
68
69
70
71
72
73
59
58
57

12. PARTS LIST

12.1- ERF-364AR, ERF-394AR, ERF-414AR

NO	PART NAME	PART CODE	MODEL			DESCRIPTION	REMARK
			364AR	394AR	414AR		
1	SHELF R	3017823200	3	3	3	GPPS	
2	COVER CHILLED CASE	3011453400	-	1	1	GPPS	
3	CASE CHILD	3011163300	-	1	1	GPPS	OPTION
		3011163340				GPPS	JUMBO
4	COVER VEGTB CASE	3011453600	1	1	1	GPPS	
5	CASE VEGTB	3011163480	2	2	2	GPPS	
6	CASE ICING	3011163200	1	1	1	PP	
7	CASE FD	3011115940	1	1	1	HIPS	
8	CASE FB	3011115310	2	2	-	HIPS	364-394
	CASE FC	3011115410	-	-	2	HIPS	414
9	CASE FA	3011115230	1	1	1	HIPS	
10	PLATE SHELF GLASS	3014547701	3	4	4	GLASS t4.0	OPTION
11	FRAME GLASS SHELF	3012202400	3	3	3	HIPS	OPTION
12	FRAME C/CASE COVER	3012202500	-	1	1	HIPS	OPTION
13	PLATE V/CASE COVER GLA	3014547801	1	1	1	GLASS t4.0	OPTION
14	FRAME V/CASE COVER	3012202600	1	1	1	HIPS	OPTION
15	BASE CONTROL PANEL	COLOUR PAGE	1	1	1	HIPS	
17	PCB MAIN AS	30143B6060	1	1	1		ERF-..4AR
18	HARNESS F PCB	3012718301	1	1	1		
19	PCB F AS	30143B6160	1	1	1		
20	WINDOWS LED	3015507400	1	1	1	SILICON RUBBER	
21	PANEL CONTROL	COLOUR PAGE	1	1	1	ABS	
22	SWITCH LAMP	3018111500	1	1	1	250V 0,25A	
23	WINDOW C/PANEL L/L	3015507220	1	1	1	ABS	
24	SOCKET LAMP AS	3017903900	1	1	1	AC250V	ASSY
25	COVER MULTI DUCT	3011451910	1	-	-	HIPS t2.0	364
		3011452110	-	1	1	HIPS t2.0	394-414
26	INSULATOR MULTI DUCT	3013337000	1	-	-	F-PS	364
		3013337200	-	1	1	F-PS	394-414
27	LAMP	3013600700	1	1	1	230V 15W	
28	WINDOW LAMP	3015503300	1	1	1		GPPS
29	SENSOR R AS	3012731800	1	1	1		
30	EVAPORATOR AS	3017044601	1	1	1	EVA+SUC PIPE+HEATER	
31	HEATER DRAIN	3012806240	1	1	1		
32	BRACKET FAN MOTOR	3010615600	1	1	1	PP	
33	MOTOR FAN AS	3011804710	1	1	1	IS-23211DW18AG	
34	LOUVER F B	3018905501	1	1	-	PP	364-394
		3018905601	-	-	1	PP (414:HIPS)	414
35	FAN	3011801410	1	1	1	ABS /100	
36	FIXTURE FAN RING	3012005400	1	-	-	SUS304 t0.5	
37	LOUVER F A	3018913800	1	1	-	HIPS	364-394
		3018913900	-	-	1	HIPS	414
38	BUSHING FAN MOTOR	3010901800	2	2	2	NR	
39	ASSY CAB URT	NO SPARE	1	-	-	ASSY	
		NO SPARE	-	1	-	ASSY	
		NO SPARE	-	-	1	ASSY	
40	HINGE *T	3012908100	2	2	2	P/O+ZN t3.2	
41	SPECIAL BOLT C	3016004900	10	10	10	M5xP0.89xL16 SWCH22A	
42	CAP SCREW	COLOUR PAGE	1	1	1	PE-LD	
43	CAP SCREW HOLE	3010920300	1	1	1	HIPS	
44	SPECIAL WASHER HINGE	3016005500	3	3	3	S20C t1.0 13/7	
45	SHAFT HI	3014903200	2	2	2		
46	HINGE *M	3012908001	1	1	1	DIE CASTING	
47	HINGE *U	3012908201	2	2	2	P/O+ZN t3.2	
48	COVER CAB BRACKET	COLOUR PAGE	1	1	1	HIPS	
49	FOOT ADJUSTING AS	3012101800	2	2	2	PP+SPECIAL BOLT	
50	CAP DRAIN HOSE	3010919700	1	1	1	NBR	
51	CASE VAPORY	3011162600	1	1	1	PP	

NO	PART NAME	PART CODE	MODEL			DESCRIPTION	REMARK
			364AR	394AR	414AR		
52	FIXTURE COMP	3012005300	2	2	2	SK5+ZN5-C t0.8	
53	DRYER ASSY	3016802203	1	1	1	15Gr (t0.51)	
54	ABSORBER COMP	3010101700	4	4	4	NR	
55	BASE COMP	3010318600	1	1	1	SBHG t1.0	
56	SPECIAL SCREW A	3016004300	4	4	4	M6.5xL20	
57	CAPACITOR RUN	3016402110	1	1	1	5uF 400AC	
58	SPECIAL WASHER R/C	3016006510	1	1	1	A	
59	SPECIAL NUT R/C	3016006410	1	1	1	M8	
60	SCREW MACHINE	7001401065	2	2	2	PAN 4x10 BSNI	
61	HARNESS EARTH	3012735200	1	1	1	HOUSING+RING TERMINAL	
62	PIPE CHARGE	3014418202	1	1	1	DUCT1-O	
63	SPECIAL WASHER EARTH	3016004700	1	1	1	/4.3 STAR	earth:4
64	SWITCH P RELAY OL	3817923600	1	1	1	4TM129SHBYY-53	
65	SWITCH P RELAY PTC	3817915400	1	1	1	33 OHMS	
66	RELAY BOX	3810506400	1	1	1		
67	CABLE CLAMP	3818200300	1	1	1		
68	HARNESS RELAY	3012731910	1	1	1		
69	RELAY BOX COVER	3811401300	1	1	1		
71	COVER MECH HOUSING	3011454100	1	1	1	HIPS	
72	SPECIAL SCREW TAPPING	7112401011	1	1	1		
73	CORD POWER AS	3011343320	1	1	1	250V, 10/16A	COMMON
		3011343420	1	1	1	250V, 5A	U.K. SPECIAL
74	PIPE WI-CON AS	3014434500	1	1	-		
75	ABSORBER PIPE C	3010103000	3	3	3	EPDM, 40gr.	PIPE CONN
76	ABSORBER PIPE B	3010101900	1	1	1	IIR	PIPE SUC
77	COVER BUTTER CASE	3011433100	1	1	1	GPPS	
78	CASE BUTTER	3011114620	1	1	1	GPPS	
79	CASE EGG	3011163600	2	2	2	PP	
80	POCKET EGG	3019008740	1	1	1	HIPS	
81	GUIDE POCKET	3012510200	1	1	1	PP	
82	POCKET BOTTLE A	3019008600	1	1	1	HIPS	
83	POCKET R DOOR	3019013600	1	1	1	HIPS	
84	ASSY R DOOR URT	COLOUR PAGE	1	-	-	ASSY	
		COLOUR PAGE	-	1	1	ASSY	
85	GASKET R DOOR AS	3012306600	1	-	-	PVC+MAGNET	
		3012306800	-	1	1	PVC+MAGNET	
86	CAP DOOR BUSHING	COLOUR PAGE	1	1	1	PP	
87	ASSY F DOOR URT	COLOUR PAGE	1	1	-	ASSY	
		COLOUR PAGE	-	-	1	ASSY	
88	GASKET F DOOR AS	3012306500	1	1	-	PVC+MAGNET	
		3012306700			1		
89	CAP HANDLE	COLOUR PAGE	1	1	1	HIPS	OPTION
90	COVER DOOR CAP *L	COLOUR PAGE	2	2	2	ABS	OPTION
91	COVER DOOR CAP *R	COLOUR PAGE	2	2	2	ABS	OPTION
92	HANDLE R	COLOUR PAGE	1	1	1	ABS	OPTION
93	DECO. HANDLE R	3011612500	1	1	1	ABS+CR COATING	OPTION
94	SPECIAL SCREW D	3016004820	4	4	4	T2 FLT 4x16 PAINTING	OPTION
95	HANDLE F	COLOUR PAGE	1	1	1	ABS	OPTION
96	DECO. HANDLE F	3011612400	1	1	1	ABS+CR COATING	OPTION
97	TEPERATURE FUSE	3017200420	1	1	1		
98	COMPRESSOR	3956190250	1	1	1	MK-490Q-L1U	
99	D-SENSOR	3012733910	1	1	1		

11.2- ERF-367AR, ERF-397AR, ERF-417AR

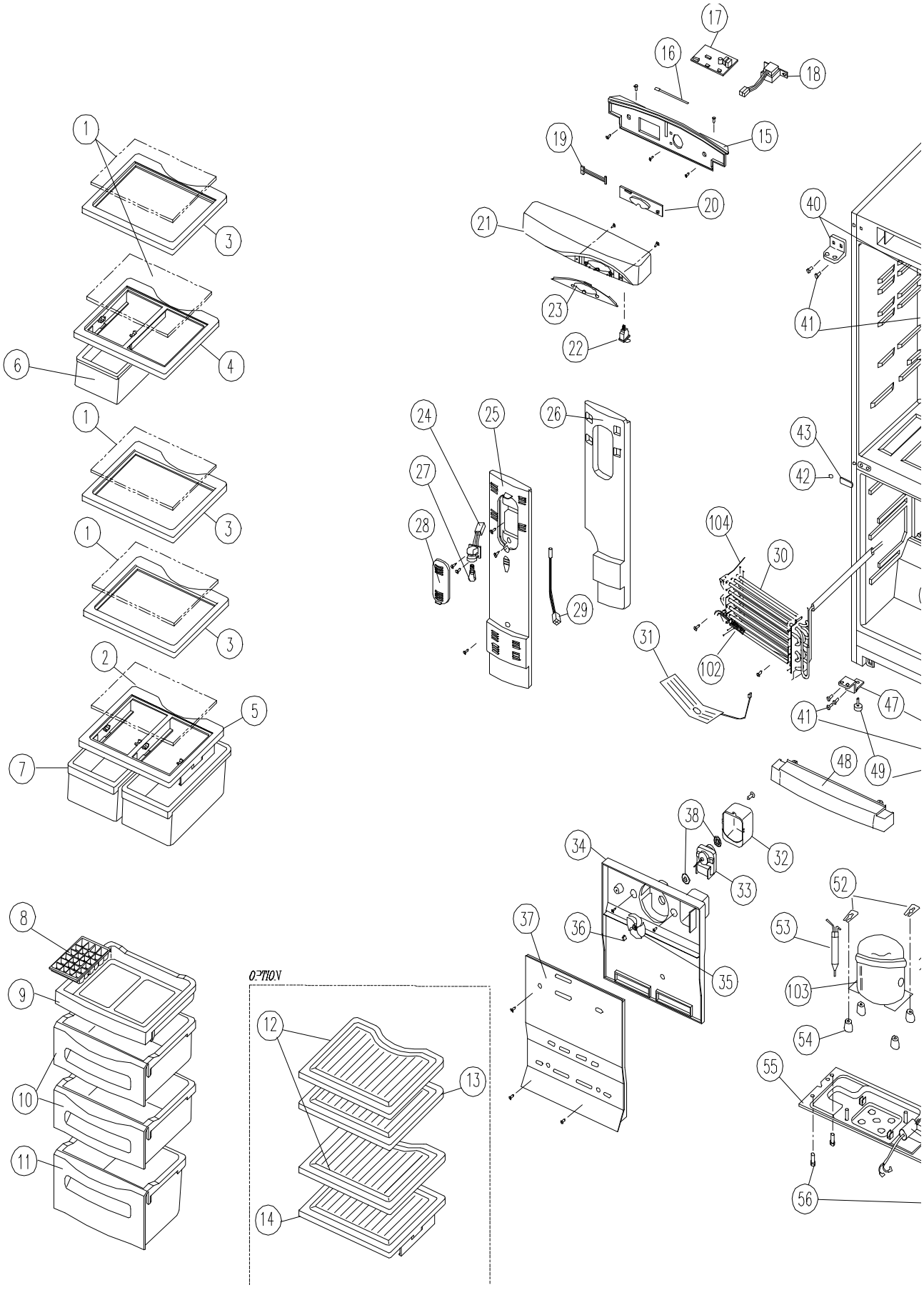

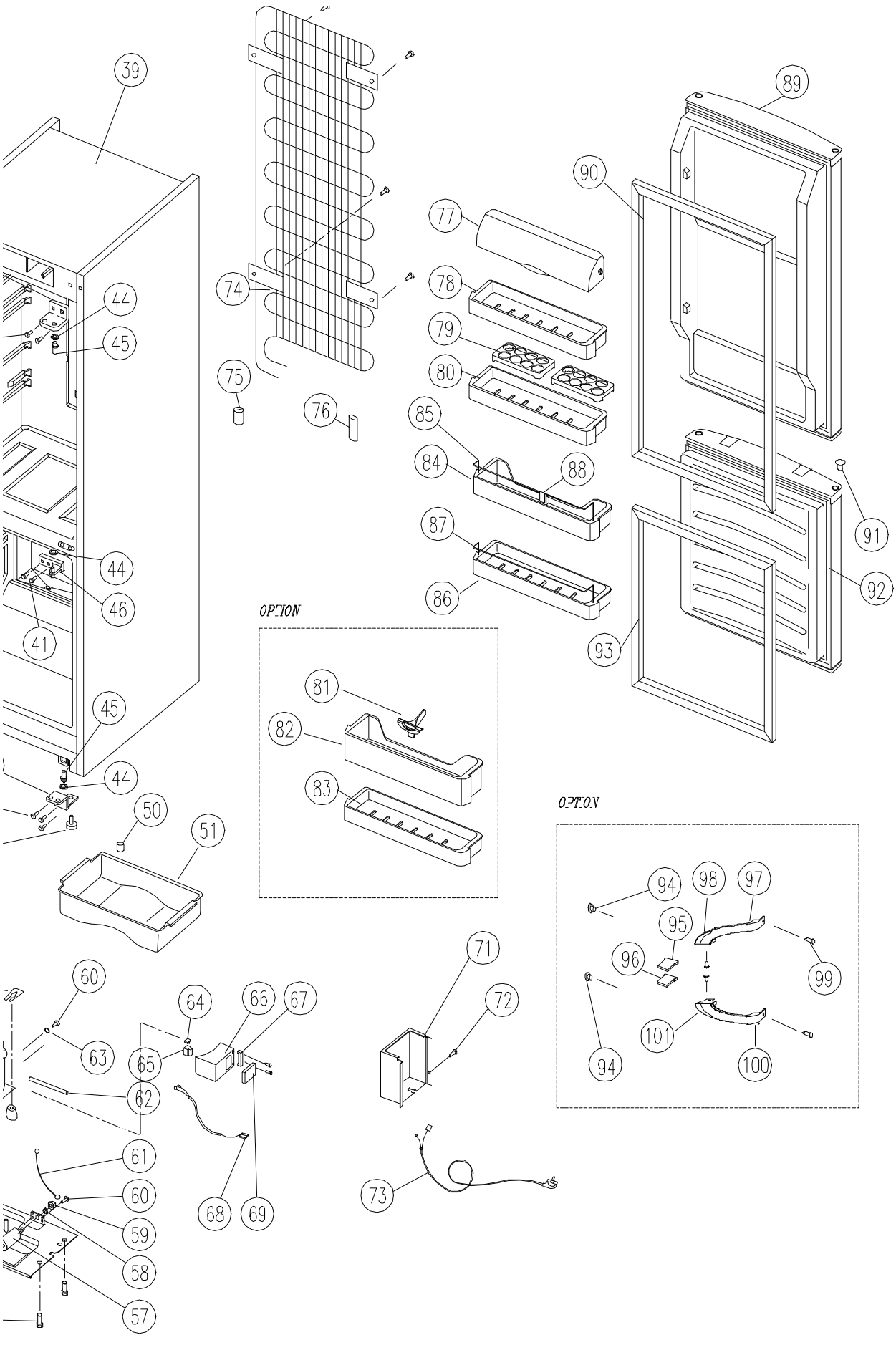
39
44
45
44
46
41
45
44
50
51
60
63
64
65
66
67
62
61
60
59
58
57
68
69
74
75
76
77
78
79
80
85
84
88
87
86
89
90
91
92
93
OPTION
81
82
83
OPTION
94
98
97
95
96
99
101
94
100
71
72
73

12.2- ERF-367AR, ERF-397AR, ERF-417AR

NO	PART NAME	PART CODE	MODEL			DESCRIPTION	REMARK
			367AR	397AR	417AR		
1	PLATE SHELF GLASS	3014547701	3	4	4	GLASS t4.0	OPTION
2	PLATE V/CASE COVER GLASS	3014547801	1	1	1	GLASS t4.0	OPTION
3	FRAME GLASS SHELF	3012202400	3	3	3	HIPS	OPTION
4	FRAME C/CASE COVER	3012202500	-	1	1	HIPS	OPTION
5	FRAME V/CASE COVER	3012202600	1	1	1	HIPS	OPTION
6	CASE CHILD	3011163340	-	1	1	GPPS JUMBO	OPTION
7	CASE VEGTB	3011163480	2	2	2	GPPS	
8	CASE ICING	3011163200	1	1	1	PP	
9	CASE FD	3011115940	1	1	1	HIPS	
10	CASE FB	3011115310	2	2	-	HIPS	
	CASE FC	3011115410	-	-	2	HIPS	
11	CASE FA	3011115230	1	1	1	HIPS	
12	SHELF R	3017823200	3	3	3	GPPS	
13	COVER CHILLED CASE	3011453400	-	1	1	GPPS	
14	COVER VEGTB CASE	3011453600	1	1	1	GPPS	
15	BASE CONTROL PANEL	COLOUR PAGE	1	1	1	HIPS	
17	PCB MAIN AS	30143B7060	1	1	1		
18	DOWN TRANS AS	5EPK041010	1	1	1		
19	HARNESS F PCB	3012718310	1	1	1		
20	PCB F AS	30143A3160	1	1	1		
21	PANEL CONTROL	COLOUR PAGE	1	1	1	ABS	
22	SWITCH LAMP	3018111500	1	1	1	250V 0,25A	
23	WINDOW C/P C/L	3015507100	1	1	1	ABS	
24	SOCKET LAMP AS	3017903900	1	1	1	AC250V	
25	COVER MULTI DUCT	3011451910	1	-	-	HIPS t2.0	ASSY
		3011452110	-	1	1	HIPS t2.0	
26	INSULATOR MULTI DUCT	3013337000	1	-	-	F-PS	
		3013337200	-	1	1	F-PS	
27	LAMP	3013600700	1	1	1	230V 15W	
28	WINDOW LAMP	3015503300	1	1	1		
29	SENSOR R AS	3012731800	1	1	1		GPPS
30	EVAPORATOR AS	3017045600	1	1	1	EVA+SUC PIPE+HEATER	
31	HEATER DRAIN	3012806240	1	1	1		
32	BRACKET FAN MOTOR	3010615600	1	1	1	PP	
33	MOTOR FAN AS	3011804710	1	1	1	IS-23211DW 18AG	
34	LOUVER F B	3018905501	1	1	-	PP	
		3018905601	-	-	1	PP (417:HIPS)	
35	FAN	3011801410	1	1	1	ABS /100	
36	FIXTURE FAN RING	3012005400	1	-	-	SUS304 t0.5	
37	LOUVER F A	3018913800	1	1	-	HIPS	
		3018913900	-	-	1	HIPS	
38	BUSHING FAN MOTOR	3010901800	2	2	2	NR	
39	ASSY CAB URT	NO SPARE	1	-	-	ASSY	
		NO SPARE	-	1	-	ASSY	
		NO SPARE	-	-	1	ASSY	
40	HINGE *T	3012908100	2	2	2	P/O+ZN t3.2	
41	SPECIAL BOLT C	3016004900	10	10	10	M5xP0.89xL16 SWCH22A	
42	CAP SCREW	COLOUR PAGE	1	1	1	PE-LD	
43	CAP SCREW HOLE	3010920300	1	1	1	HIPS	
44	SPECIAL WASHER HINGE	3016005500	3	3	3	S20C t1.0 13/7	
45	SHAFT HI	3014903200	2	2	2		
46	HINGE *M	3012908001	1	1	1	DIE CASTING	
47	HINGE *U	3012908201	2	2	2	P/O+ZN t3.2	
48	COVER CAB BRACKET	COLOUR PAGE	1	1	1	HIPS	
49	FOOT ADJUSTING AS	3012101800	2	2	2	PP+SPECIAL BOLT	
50	CAP DRAIN HOSE	3010919700	1	1	1	NBR	
51	CASE VAPORY	3011162600	1	1	1	PP	

NO	PART NAME	PART CODE	MODEL			DESCRIPTION	REMARK
			367A	397A	417A		
52	FIXTURE COMP	3012005300	2	2	2	SK5+ZN5-C t0.8	
53	DRYER ASSY	3016802203	1	1	1	15Gr (t0.51)	
54	ABSORBER COMP	3010101700	4	4	4	NR	
55	BASE COMP	3010318600	1	1	1	SBHG t1.0	
56	SPECIAL SCREW A	3016004300	4	4	4	M6.5xL20	
57	CAPACITOR RUN	3016402110	1	1	1	5uF	
58	SPECIAL WASHER R/C	3016006510	1	1	1	A	
59	SPECIAL NUT R/C	3016006410	1	1	1	M8	
60	SCREW MACHINE	7001401065	2	2	2	PAN 4x10 BSNI	
61	HARNESS EARTH	3012735200	1	1	1	HOUSING+RING TERMINAL	
62	PIPE CHARGE	3014418202	1	1	1	DUCT1-O	
63	SPECIAL WASHER	3016004700	4	4	4	/4.3 STAR	earth:4
64	SWITCH P RELAY OL	3817923600	1	1	1	4TM129SHBYY-53	
65	SWITCH P RELAY PTC	3817915400	1	1	1	33 OHMS	
66	RELAY BOX	3810506400	1	1	1		
67	CABLE CLAMP	3818200300	1	1	1		
68	HARNESS RELAY	3012731910	1	1	1		
69	RELAY BOX COVER	3811401300	1	1	1		
71	COVER MECH HOUSING	3011454100	1	1	1	HIPS	
72	SPECIAL SCREW TAPPING	7112401011	1	1	1		
73	CORD POWER AS	3011343320	1	1	1	250V, 10/16A	COMMON
		3011343420	1	1	1	250V, 5A	U.K. SPECIA
74	PIPE WI-CON AS	3014434500	1	1	1		
75	ABSORBER PIPE C	3010103000	3	3	3	EPDM, 40gr.	PIPE CONN
76	ABSORBER PIPE B	3010101900	1	1	1	IIR	PIPE SUC
77	COVER BUTTER CASE	3011433100	1	1	1	GPPS	
78	CASE BUTTER	3011114620	1	1	1	HIPS	
79	CASE EGG	3011163600	2	2	2	PP	
80	POCKET EGG	3019008740	1	1	1	HIPS	
81	GUIDE POCKET	3012510200	1	1	1	PP	OPTION
82	POCKET BOTTLE A	3019008600	1	1	1	HIPS	OPTION
83	POCKET R DOOR	3019013600	1	1	1	HIPS	OPTION
84	POCKET BOTTLE B	3019009510	FOR SUPERIOR CLASS			HIPS	SUPERIOR
85	GUIDE BOTTLE SUPPORT B	3012508000	FOR SUPERIOR CLASS			STEAL	SUPERIOR
86	POCKET R DOOR	3019008730	FOR SUPERIOR CLASS			HIPS	SUPERIOR
87	GUIDE BOTTLE SUPPORT C	3012508100	FOR SUPERIOR CLASS			STEAL	SUPERIOR
88	SUPPORT BOTTLE POCKET B	3015300400	1	1	1	HIPS	
89	ASSY R DOOR URT	COLOUR PAGE	1	-	-	ASSY	
		COLOUR PAGE	-	1	1	ASSY	
90	GASKET R DOOR AS	3012306600	1	-	-	PVC+MAGNET	
		3012306800	-	1	1	PVC+MAGNET	
91	CAP DOOR BUSHING	COLOUR PAGE	1	1	1	PP	
92	ASSY F DOOR URT	COLOUR PAGE	1	1	-	ASSY	
		COLOUR PAGE	-	-	1	ASSY	
93	GASKET F DOOR AS	3012306500	1	1	-	PVC+MAGNET	
		3012306700			1		
94	CAP HANDLE	COLOUR PAGE	1	1	1	HIPS	OPTION
95	COVER DOOR CAP *L	COLOUR PAGE	2	2	2	ABS	OPTION
96	COVER DOOR CAP *R	COLOUR PAGE	2	2	2	ABS	OPTION
97	HANDLE R	COLOUR PAGE	1	1	1	ABS	OPTION
98	DECO. HANDLE R	3011612500	1	1	1	ABS+CR COATING	OPTION
99	SPECIAL SCREW D	3016004820	4	4	4	T2 FLT 4x16 PAINTING	OPTION
100	HANDLE F	COLOUR PAGE	1	1	1	ABS	OPTION
101	DECO. HANDLE F	3011612400	1	1	1	ABS+CR COATING	OPTION
102	TEPERATURE FUSE	3017200420	1	1	1		
103	COMPRESSOR	3956190250	1	1	1	MK-490Q-L1U	
104	D-SENSOR	3012733910	1	1	1		

11.3- ERF-384AR

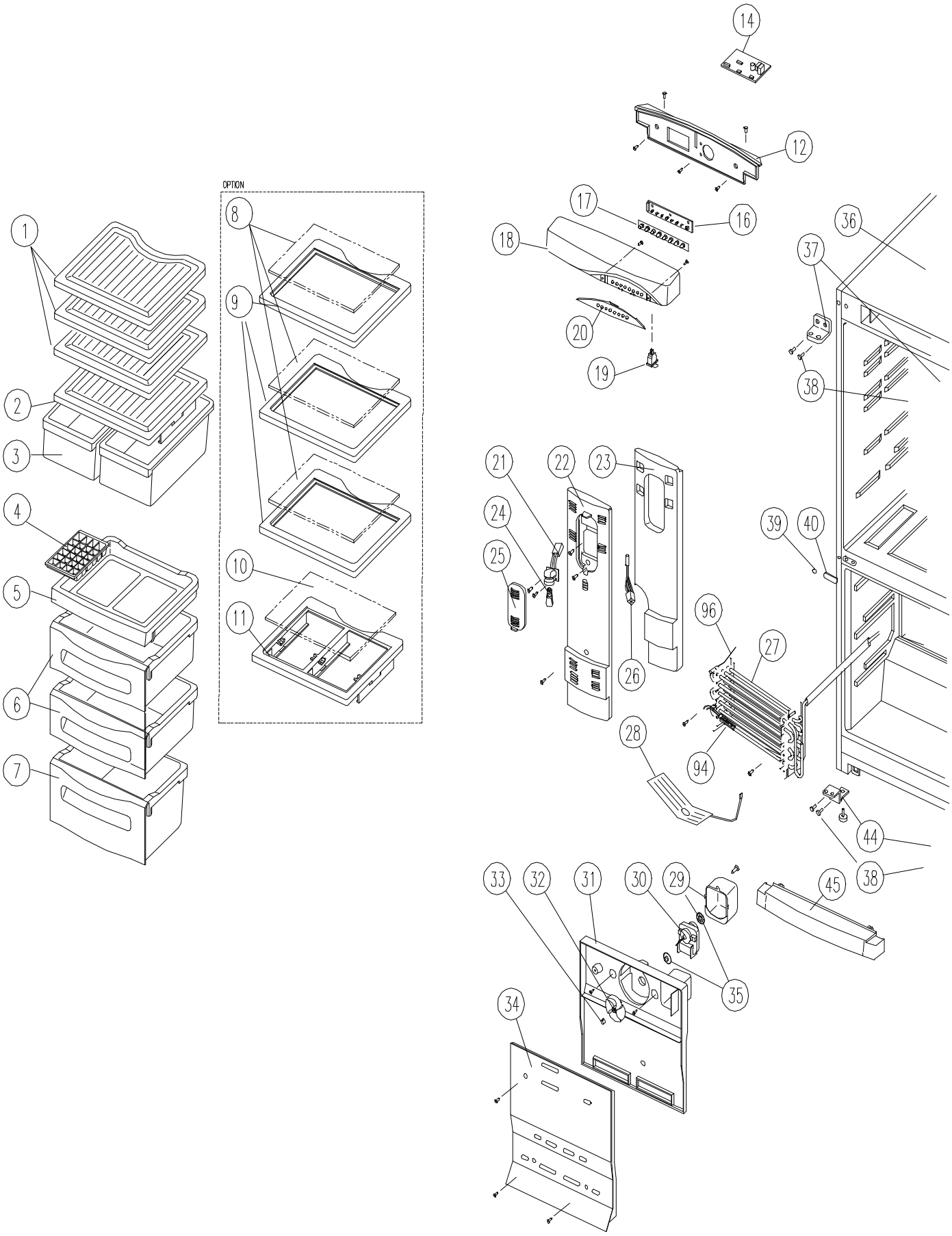

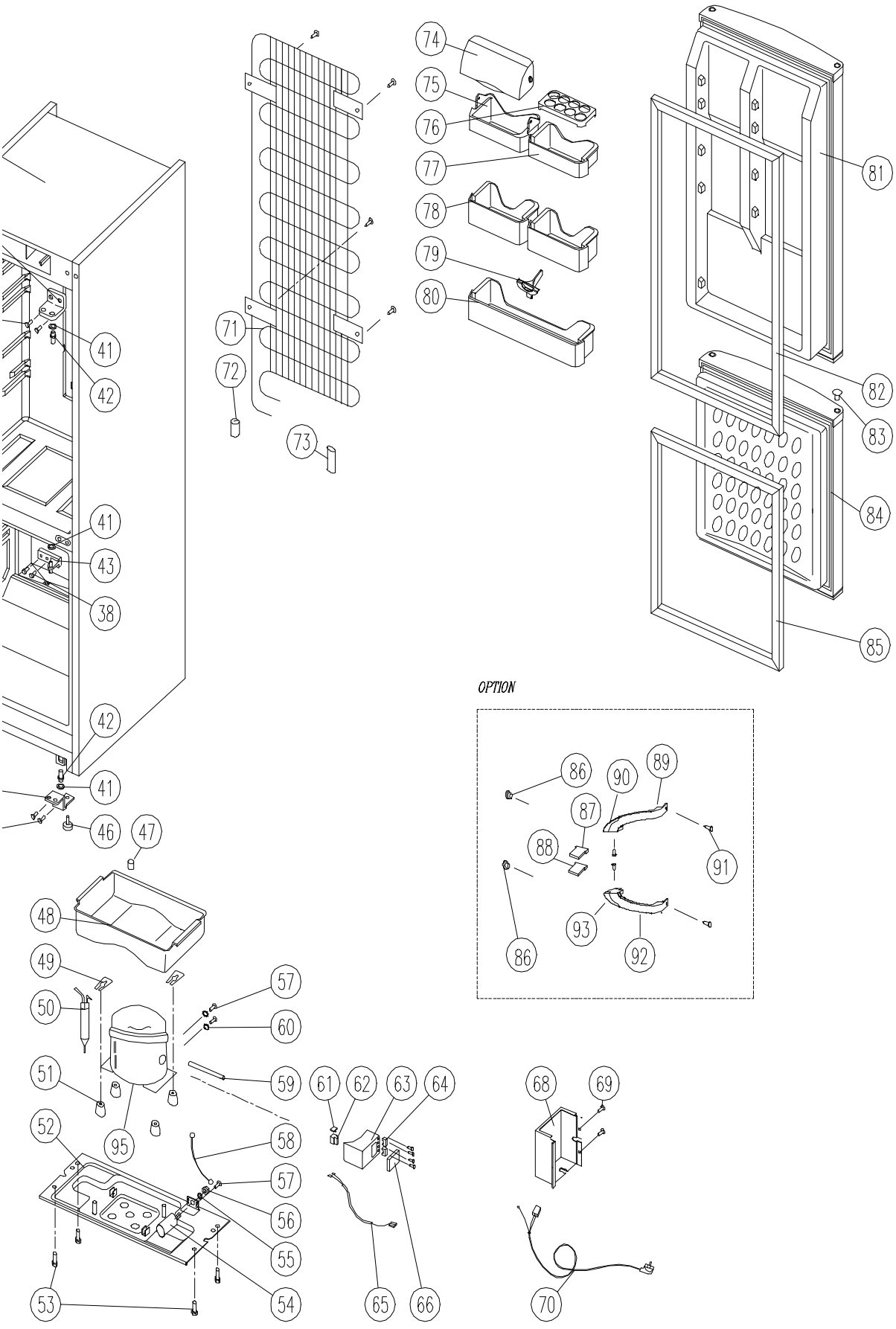
41
42
41
43
38
42
41
46
47
48
49
50
51
52
95
53
57
60
59
58
57
56
55
54
61
62
63
64
65
66
71
72
73
74
75
76
77
78
79
80
81
82
83
84
85
OPTION
86
90
89
87
88
91
86
93
92
68
69
70

12.3- ERF-384AR

NO	PART NAME	PART CODE	MODEL	DESCRIPTION	REMARK
1	SHELF R	3017823200	3	GPPS	394/414
2	COVER VEGTB CASE	3011453600	1	GPPS	
3	CASE VEGTB	3011163480	2	GPPS	
4	CASE ICING	3011163200	1	PP	
5	CASE FD	3011115940	1	HIPS	
6	CASE FC	3011115410	2	HIPS	
7	CASE FA	3011115230	1	HIPS	
8	PLATE SHELF GLASS	3014547701	3	GLASS t4.0	OPTION
9	FRAME GLASS SHELF	3012202400	3	HIPS	OPTION
10	PLATE V/CASE COVER GLASS	3014547801	1	GLASS t4.0	OPTION
11	FRAME V/CASE COVER	3012202600	1	HIPS	OPTION
12	BASE CONTROL PANEL	COLOUR PAGE	1	HIPS	
14	PCB MAIN AS	30143B6060	1		
15	HARNESS F PCB	3012718301	1		
16	PCB F AS	30143B6160	1		
17	WINDOWS LED	3015507400	1	SILICON RUBBER	
18	PANEL CONTROL	COLOUR PAGE	1	ABS	
19	SWITCH LAMP	3018111500	1	250V 0,25A	
20	WINDOW C/PANEL L/L	3015507220		ABS	
21	SOCKET LAMP AS	3017903900	1		ASSY
22	COVER MULTI DUCT	3011451910	1	HIPS t2.0	
23	INSULATOR MULTI DUCT	3013337000	1	F-PS	
24	LAMP	3013600700	1	230V 15W	
25	WINDOW LAMP	3015503300	1		GPPS
26	SENSOR R AS	3012731800	1		
27	EVAPORATOR AS	3017044601	1	EVA+SUC PIPE+HEATER	
28	HEATER DRAIN	3012806240	1	GLASS HEATER+FUSE TEMP	
29	BRACKET FAN MOTOR	3010615600	1	PP	
30	MOTOR FAN AS	3011804710	1	IS-23211DW 18AG	
31	LOUVER F B	3018905601	1	HIPS	
32	FAN	3011801410	1	ABS	
33	FIXTURE FAN RING	3012005400	1	SUS304 t0.5	
34	LOUVER F A	3018913900	-	HIPS	
35	BUSHING FAN MOTOR	3010901800	2	NR	
36	ASSY CAB URT	NO SPARE	1	ASSY	
37	HINGE *T	3012908100	2	P/O+ZN t3.2	
38	SPECIAL BOLT C	3016004900	10	M5xP0.89xL16 SWCH22A	
39	CAP SCREW	COLOUR PAGE	1	PE-LD	
40	CAP SCREW HOLE	3010920300	1	HIPS	
41	SPECIAL WASHER HINGE	3016005500	3	S20C t1.0 13/7	
42	SHAFT HI	3014903200	2		
43	HINGE *M	3012908001	1	DIE CASTING	
44	HINGE *U	3012908201	2	P/O+ZN t3.2	
45	COVER CAB BRACKET	COLOUR PAGE	1	HIPS	
46	FOOT ADJUSTING AS	3012101800	2	PP+SPECIAL BOLT	
47	CAP DRAIN HOSE	3010919700	1	NBR	
48	CASE VAPORY	3011162600	1	PP	

NO	PART NAME	PART CODE	MODEL	DESCRIPTION	REMARK
49	FIXTURE COMP	3012005300	2	SK5+ZN5-C t0.8	
50	DRYER ASSY	3016802203	1	15Gr (t0.51)	
51	ABSORBER COMP	3010101700	4	NR	
52	BASE COMP	3010318600	1	SBHG t1.0	
53	SPECIAL SCREW A	3016004300	4	M6.5xL20	
54	CAPACITOR RUN	3016402110	1	5uF	
55	SPECIAL WASHER R/C	3016006510	1		
56	SPECIAL NUT R/C	3016006410	1	M8	
57	SCREW MACHINE	7001401065	2	PAN 4x10 BSNI	
58	HARNESS EARTH	3012735200	1	HOUSING+RING TERMINAL	
59	PIPE CHARGE	3014418202	1	DUCT1-O	
60	SPECIAL WASHER EARTH	3016004700	1	/4.3 STAR	earth:4
61	SWITCH P RELAY OL	3817923600	1	4TM129SHBYY-53	
62	SWITCH P RELAY PTC	3817915400	1	33 OHMS	
63	RELAY BOX	3810506400	1	NORYL	
64	CABLE CLAMP	3818200300	1	NORYL	
65	HARNESS RELAY	3012731910	1		
66	RELAY BOX COVER	3811401300	1		
68	COVER MECH HOUSING	3011454100	1	HIPS	
69	SPECIAL SCREW TAPPING	7112401011	1		
70	CORD POWER AS	3011343320	1	250V, 10/16A	COMMON
		3011343420	1	250V, 5A	U.K. SPECIA
71	PIPE WI-CON AS	3014434500	1		
72	ABSORBER PIPE C	3010103000	2	EPDM, 40gr.	PIPE CONN
73	ABSORBER PIPE B	3010101900	1	IIR	PIPE SUC
74	COVER BUTTER CASE	3011453500	1	HIPS	
75	CASE BUTTER	3011163540	1	PP	
76	CASE EGG	3011163600	1	HIPS	
77	POCKET EGG	3019014100	1	PP	
78	POCKET BOTTLE	3019014200	2	HIPS	
79	GUIDE POCKET	3012510200	1	HIPS	
80	POCKET R DOOR	3019014300		HIPS	SUPERIOR
81	ASSY R DOOR URT	COLOUR PAGE		STEAL	SUPERIOR
82	GASKET R DOOR AS	3012306600		HIPS	SUPERIOR
83	CAP DOOR BUSHING	COLOUR PAGE		STEAL	SUPERIOR
84	ASSY F DOOR URT	COLOUR PAGE	1	ASSY	
85	GASKET F DOOR AS	3012306700	-	ASSY	
86	CAP HANDLE	COLOUR PAGE	1	HIPS	OPTION
87	COVER DOOR CAP *L	COLOUR PAGE	2	ABS	OPTION
88	COVER DOOR CAP *R	COLOUR PAGE	2	ABS	OPTION
89	HANDLE R	COLOUR PAGE	1	ABS	OPTION
90	DECO. HANDLE R	3011612500		ABS+CR COATING	OPTION
91	SPECIAL SCREW D	3016004820	4	T2 FLT 4x16 PAINTING	OPTION
92	HANDLE F	COLOUR PAGE	1	ABS	OPTION
93	DECO. HANDLE F	3011612400		ABS+CR COATING	OPTION
94	TEPERATURE FUSE	3017200420	1		
95	COMPRESSOR	3956190250	1	MK-490Q-L1U	
96	D-SENSOR	3012733910	1		

11.4- ERF-387AR

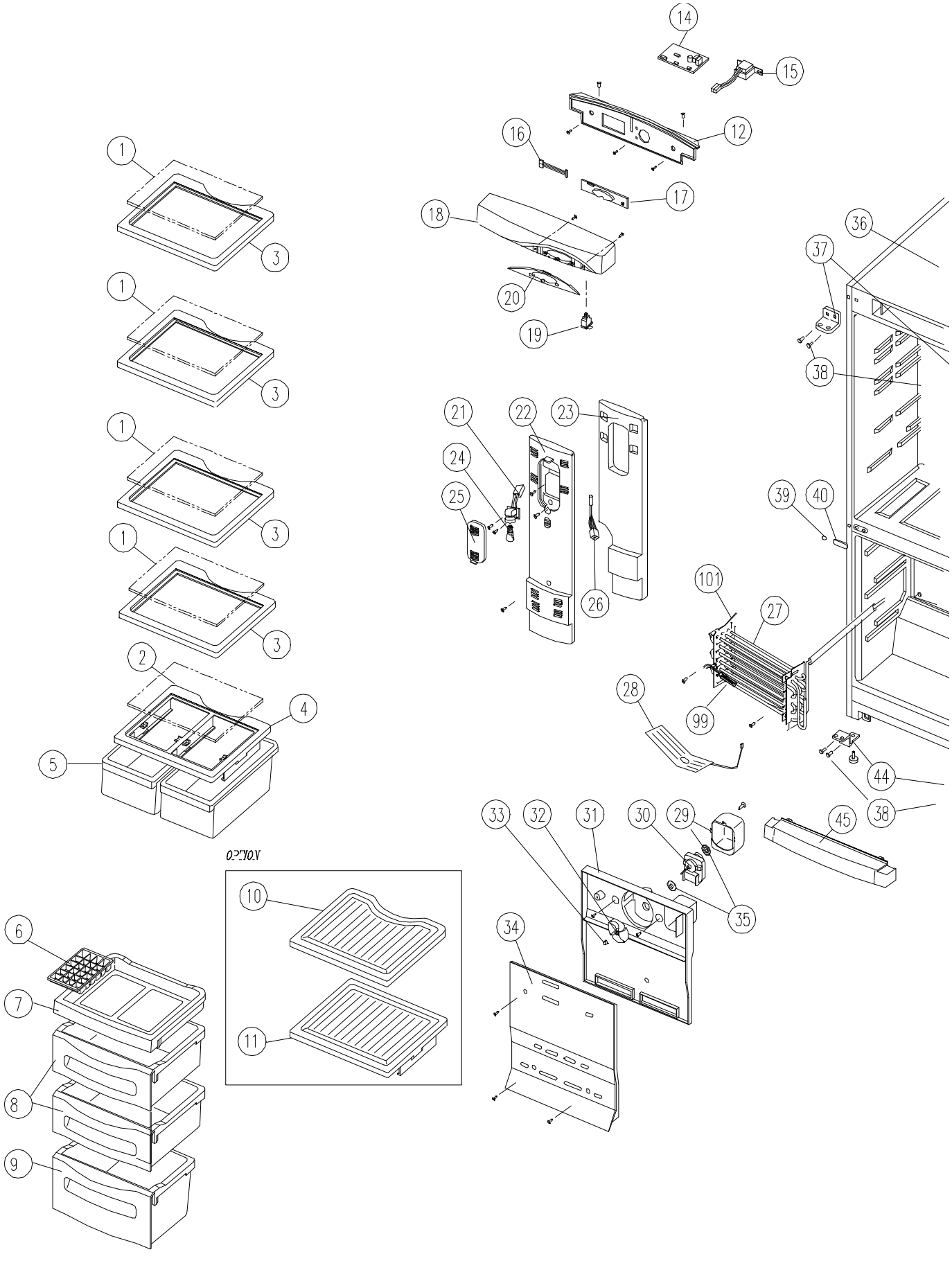

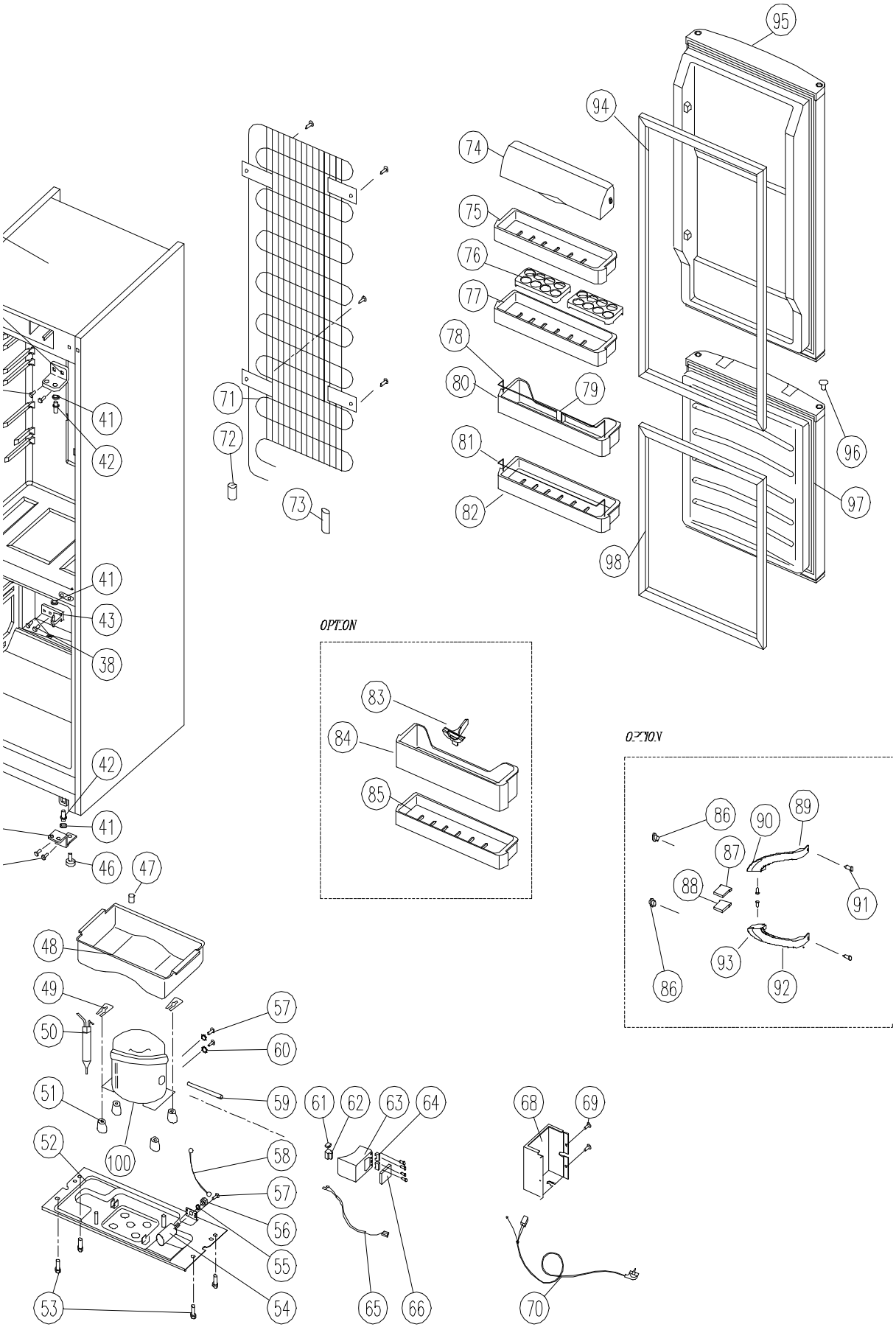
95
94
74
75
76
77
78
80
79
81
82
71
72
73
41
42
41
43
38
42
41
46
47
48
49
50
51
52
100
57
60
59
58
57
56
55
54
53
61
62
63
64
65
66
68
69
70
96
97
98
OPTION
83
84
85
OPTION
86
90
89
87
88
91
86
93
92

12.4- ERF-387AR

NO	PART NAME	PART CODE	MODEL	DESCRIPTION	REMARK
1	PLATE SHELF GLASS	3014547701	3	GLASS t4.0	
2	PLATE V/CASE COVER GLASS	3014547801	1	GLASS t4.0	
3	FRAME GLASS SHELF	3012202400	3	HIPS	
4	FRAME V/CASE COVER	3012202600	1	HIPS	
5	CASE VEGTB	3011163480	2	GPPS	
6	CASE ICING	3011163200	1	PP	
7	CASE FD	3011115940	1	HIPS	
8	CASE FC	3011115410	2	HIPS	
9	CASE FA	3011115230	1	HIPS	
10	SHELF R	3017823200	3	GPPS	OPTION
11	COVER VEGTB CASE	3011453600	1	GPPS	OPTION
12	BASE CONTROL PANEL	COLOUR PAGE	1	HIPS	
14	PCB MAIN AS	30143B7060	1		
15	DOWN TRANS AS	5EPK041010			
16	HARNESS F PCB	3012718310	1		
17	PCB F AS	30143A3160	1	CUSTOM LED	
18	PANEL CONTRL	COLOUR PAGE	1	ABS	
19	SWITCH LAMP	3018111500	1	250V/0,25 A DURA:50000	
20	WINDOW C/P C/L	3015507100		ABS	
21	SOCKET LAMP AS	3017903900	1		ASSY
22	COVER MULTI DUCT	3011451910	1	HIPS t2.0	
23	INSULATOR MULTI DUCT	3016637000	1	F-PS	
24	LAMP	3013600700	1	230V 15W	
25	WINDOW LAMP	3015503300	1		GPPS
26	SENSOR R AS	3012731800	1		
27	EVAPORATOR AS	3017044601	1	EVA+SUC PIPE+HEATER	
28	HEATER DRAIN	3012806240	1		
29	BRACKET FAN MOTOR	3010615600	1	PP	
30	MOTOR FAN AS	3011804710	1	IS-23211DW18AG	
31	LOUVER F B	3018905601	1	HIPS	
32	FAN	3011801410	1	ABS	
33	FIXTURE FAN RING	3012005400	1	SUS304 t0.5	
34	LOUVER F A	3018913900	-	HIPS	
35	BUSHING FAN MOTOR	3010901800	2	NR	
36	ASSY CAB URT	NO SPARE	1	ASSY	
37	HINGE *T	3012908100	2	P/O+ZN t3.2	
38	SPECIAL BOLT C	3016004900	10	M5xP0.89xL16 SWCH22A	
39	CAP SCREW	COLOUR PAGE	1	PE-LD	
40	CAP SCREW HOLE	3010920300	1	HIPS	
41	SPECIAL WASHER HINGE	3016005500	3	S20C t1.0 13/7	
42	SHAFT HI	3014903200	2		
43	HINGE *M	3012908001	1	DIE CASTING	
44	HINGE *U	3012908201	2	P/O+ZN t3.2	
45	COVER CAB BRACKET	COLOUR PAGE	1	HIPS	
46	FOOT ADJUSTING AS	3012101800	2	PP+SPECIAL BOLT	
47	CAP DRAIN HOSE	3010919700	1	NBR	
48	CASE VAPORY	3011162600	1	PP	

NO	PART NAME	PART CODE	MODEL	DESCRIPTION	REMARK
49	FIXTURE COMP	3012005300	2	SK5+ZN5-C t0.8	
50	DRYER ASSY	3016802203	1	15Gr (t0.51)	
51	ABSORBER COMP	3010101700	4	NR	
52	BASE COMP	3010318600	1	SBHG t1.0	
53	SPECIAL SCREW A	3016004300	4	M6.5xL20	
54	CAPACITOR RUN	3016402110	1	5uF	
55	SPECIAL WASHER R/C	3016006510	1		
56	SPECIAL NUT R/C	3016006410	1	M8	
57	SCREW MACHINE	7051401065	2	PAN 4x10 BSNI	
58	HARNESS EARTH	3012735200	1	HOUSING+RING TERMINAL	
59	PIPE CHARGE	3014418202	1	DUCT1-O	
60	SPECIAL WASHER	3016004700	1	/4.3 STAR	earth:4
61	SWITCH P RELAY OL	3817923600	1	4TM129SHBYY-53	
62	SWITCH P RELAY PTC	3817915400	1	33 OHMS	
63	RELAY BOX	3810506400	1	NORYL	
64	CABLE CLAMP	3818200300	1	NORYL	
65	HARNESS RELAY	3012731910	1		
66	RELAY BOX COVER	3811401300	1		
68	COVER MECH HOUSING	3011454100	1	HIPS	
69	SPECIAL SCREW TAPPING	7112401011	1		
70	CORD POWER AS	3011343320	1	250V, 10/16A	COMMON
		3011343420	1	250V, 5A	U.K. SPECIA
71	PIPE WI-CON AS	3014434500	1		
72	ABSORBER PIPE C	3010103000	2	EPDM, 40gr.	PIPE CONN
73	ABSORBER PIPE B	3010101900	1	IIR	PIPE SUC
74	COVER BUTTER CASE	3011433100	1	HIPS	
75	CASE BUTTER	3011114620	1	PP	
76	CASE EGG	3011163600	2	HIPS	
77	POCKET EGG	3019008740	1	PP	
78	GUIDE BOTTLE SUPPORT B	3012508000	1	HIPS	
79	SUPPORT BOTTLE POCKET B	3015300400	1	HIPS	
80	POCKET BOTTLE B	3019009510	1	HIPS	
81	GUIDE BOTTLE SUPPORT C	3012508100	1	STEAL	
82	POCKET R DOOR	3019008710	1	HIPS	
83	GUIDE POCKET	3012510200	1	STEAL	
84	POCKET BOTTLE A	3019008600	1	ASSY	
85	POCKET R DOOR	3019013600	1	ASSY	
86	CAP HANDLE	COLOUR PAGE	1	HIPS	
87	COVER DOOR CAP *L	COLOUR PAGE	2	ABS	
88	COVER DOOR CAP *R	COLOUR PAGE	2	ABS	
89	HANDLE R	COLOUR PAGE	1	ABS	
90	DECO. HANDLE R	3011612500	1	ABS+CR COATING	
91	SPECIAL SCREW D	3016004820	4	T2 FLT 4x16 PAINTING	
92	HANDLE F	COLOUR PAGE	1	ABS	
93	DECO. HANDLE F	3011612400	1	ABS+CR COATING	
94	GASKET R DOOR AS	3012306600	1	PVC+MAGNET	
95	ASSY R DOOR URT	COLOUR PAGE	1	ASSY	
96	CAP DOOR BUSHING	COLOUR PAGE	1	PP	
97	ASSY F DOOR URT	COLOUR PAGE	1	ASSY	
98	GASKET F DOOR AS	3012306700	1	PVC+MAGNET	
99	TEMPERATURE FUSE	3017200420	1		
100	COMPRESSOR	3956190250	1	MK-490Q-L1U	
101	D-SENSOR	3012733910	1		

PART LIST OF COLOUR COMPONENTS (ERF-364A, 384A, 394A, 414A)

WHITE

No	Part Name	Part code	MODEL 364	394	384	414	Description
1	PANEL CONTROL L/L	3014231000	1	1	1	1	ABS
2	BASE CONTROL PANEL	3010312900	1	1	1	1	HIPS
3	REFRIGERATOR DOOR (364)	3010057730	1	-	-	-	URT FORMING (CO-LAMINAR)
4	REFRIGERATOR DOOR (384)	3010057720	-	-	1	-	URT FORMING (CO-LAMINAR)
5	REFRIGERATOR DOOR (394-414)	3010057750	-	1	-	1	URT FORMING (CO-LAMINAR)
6	FREEZER DOOR (364-394)	3010086570	1	1	-	-	URT FORMING (CO-LAMINAR)
7	FREEZER DOOR (384)	3010086780	-	-	1	-	URT FORMING (CO-LAMINAR)
8	FREEZER DOOR (414)	3010086580	-	-	1	1	URT FORMING (CO-LAMINAR)
9	REFRIGERATOR DOOR (364)-HH	3010086490	1	-	-	-	URT FORMING (CO-LAMINAR)
10	REFRIGERATOR DOOR (384)-HH	3010057710	-	-	1	-	URT FORMING (CO-LAMINAR)
11	REFRIGERATOR DOOR (394-414)-HH	3010057740	-	1	-	1	URT FORMING (CO-LAMINAR)
12	FREEZER DOOR (364-394)-HH	3010086590	1	1	-	-	URT FORMING (CO-LAMINAR)
13	FREEZER DOOR (384)-HH	3010086770	-	-	1	-	URT FORMING (CO-LAMINAR)
14	FREEZER DOOR (414)-HH	3010086600	-	-	1	1	URT FORMING (CO-LAMINAR)
15	HANDLE *F	3012626900	1	1	1	1	PBT
16	HANDLE *R	3012627000	1	1	1	1	PBT
17	COVER DOOR CAP *L	3011467300	2	2	2	2	ABS
18	COVER DOOR CAP *R	3011467400	2	2	2	2	ABS
19	CAP HANDLE	3010910000	4	4	4	4	HIPS
20	CAP SCREW	3010920200	1	1	1	1	HIPS
21	CAP DOOR BUSHING	3010918301	1	1	1	1	PP
22	COVER CAB BRACKET	3011467500	1	1	1	1	HIPS

SILVER

No	Part Name	Part code	MODEL 364	394	384	414	Description
1	PANEL CONTROL L/L	3014231020	1	1	1	1	ABS + SLIVER
2	BASE CONTROL PANEL	3010312910	1	1	1	1	HIPS +SILVER
3	REFRIGERATOR DOOR (364)	3010057760	1	-	-	-	URT FORMING (CO-LAMINAR)
4	REFRIGERATOR DOOR (384)	3010057800	-	-	1	-	URT FORMING (CO-LAMINAR)
5	REFRIGERATOR DOOR (394-414)	3010057770	-	1	-	1	URT FORMING (CO-LAMINAR)
6	FREEZER DOOR (364-394)	3010086620	1	1	-	-	URT FORMING (CO-LAMINAR)
7	FREEZER DOOR (384)	3010086800	-	-	1	-	URT FORMING (CO-LAMINAR)
8	FREEZER DOOR (414)	3010086630	-	-	1	1	URT FORMING (CO-LAMINAR)
9	REFRIGERATOR DOOR (364)-HH	3010057780	1	-	-	-	URT FORMING (CO-LAMINAR)
10	REFRIGERATOR DOOR (384)-HH	3010057820	-	-	1	-	URT FORMING (CO-LAMINAR)
11	REFRIGERATOR DOOR (394-414)-HH	3010057790	-	1	-	1	URT FORMING (CO-LAMINAR)
12	FREEZER DOOR (364-394)-HH	3010086640	1	1	-	-	URT FORMING (CO-LAMINAR)
13	FREEZER DOOR (384)-HH	3010086790	-	-	1	-	URT FORMING (CO-LAMINAR)
14	FREEZER DOOR (414)-HH	3010086650	-	-	1	1	URT FORMING (CO-LAMINAR)
15	HANDLE *F	3012626910	1	1	1	1	PBT + DARK GREY
16	HANDLE *R	3012627010	1	1	1	1	PBT + DARK GREY
17	COVER DOOR CAP *L	3011467320	2	2	2	2	ABS + SILVER
18	COVER DOOR CAP *R	3011467420	2	2	2	2	ABS + SILVER
19	CAP HANDLE	3010910010	4	4	4	4	HIPS +SILVER
20	CAP SCREW	3010920210	1	1	1	1	HIPS +SILVER
21	CAP DOOR BUSHING	3010918310	1	1	1	1	PP + SILVER
22	COVER CAB BRACKET	3011467520	1	1	1	1	HIPS + SILVER

INOX (Dark gray)

No	Part Name	Part code	MODEL 364	394	384	414	Description
1	PANEL CONTROL L/L	3014231010	1	1	1	1	ABS
2	BASE CONTROL PANEL	3010312910	1	1	1	1	HIPS
3	REFRIGERATOR DOOR (364)	3010057830	1	-	-	-	URT FORMING (INOX)
4	REFRIGERATOR DOOR (384)	3010057870	-	-	1	-	URT FORMING (INOX)
5	REFRIGERATOR DOOR (394-414)	3010057840	-	1	-	1	URT FORMING (INOX)
6	FREEZER DOOR (364-394)	3010086670	1	1	-	-	URT FORMING (INOX)
7	FREEZER DOOR (384)	3010086820	-	-	1	-	URT FORMING (INOX)
8	FREEZER DOOR (414)	3010086680	-	-	1	1	URT FORMING (INOX)
9	REFRIGERATOR DOOR (364)-HH	3010057850	1	-	-	-	URT FORMING (INOX)
10	REFRIGERATOR DOOR (384)-HH	3010057890	-	-	1	-	URT FORMING (INOX)
11	REFRIGERATOR DOOR (394-414)-HH	3010057860	-	1	-	1	URT FORMING (INOX)
12	FREEZER DOOR (364-394)-HH	3010086690	1	1	-	-	URT FORMING (INOX)
13	FREEZER DOOR (384)-HH	3010086810	-	-	1	-	URT FORMING (INOX)
14	FREEZER DOOR (414)-HH	3010086700	-	-	1	1	URT FORMING (INOX)
15	HANDLE *F	3012626910	1	1	1	1	PBT + DARK GREY
16	HANDLE *R	3012627010	1	1	1	1	PBT + DARK GREY
17	COVER DOOR CAP *L	3011467310	2	2	2	2	ABS
18	COVER DOOR CAP *R	3011467410	2	2	2	2	ABS
19	CAP HANDLE	3010910010	4	4	4	4	HIPS
20	CAP SCREW	3010920210	1	1	1	1	HIPS
21	CAP DOOR BUSHING	3010918310	1	1	1	1	PP
22	COVER CAB BRACKET	3011467510	1	1	1	1	HIPS

PART LIST OF COLOUR COMPONENTS (ERF-367A, 387A, 397A, 417A)

WHITE

No	Part Name	Part code	MODEL				Description
			367	397	387	417	
1	PANEL CONTROL C/L A	3014230900	1	1	1	1	ABS
2	BASE CONTROL PANEL	3010312900	1	1	1	1	HIPS
3	REFRIGERATOR DOOR (367)	3010057730	1	-	-	-	URT FORMING (CO-LAMINAR)
4	REFRIGERATOR DOOR (387)	3010057730	-	-	1	-	URT FORMING (CO-LAMINAR)
5	REFRIGERATOR DOOR (397-417)	3010057750	-	1	-	1	URT FORMING (CO-LAMINAR)
6	FREEZER DOOR (367-397)	3010086570	1	1	-	-	URT FORMING (CO-LAMINAR)
7	FREEZER DOOR (387)	3010086580	-	-	1	-	URT FORMING (CO-LAMINAR)
8	FREEZER DOOR (417)	3010086580	-	-	1	1	URT FORMING (CO-LAMINAR)
9	REFRIGERATOR DOOR (367)-HH	3010086490	1	-	-	-	URT FORMING (CO-LAMINAR)
10	REFRIGERATOR DOOR (387)-HH	3010086490	-	-	1	-	URT FORMING (CO-LAMINAR)
11	REFRIGERATOR DOOR (397-417)-HH	3010057740	-	1	-	1	URT FORMING (CO-LAMINAR)
12	FREEZER DOOR (367-397)-HH	3010086590	1	1	-	-	URT FORMING (CO-LAMINAR)
13	FREEZER DOOR (387)-HH	3010086600	-	-	1	-	URT FORMING (CO-LAMINAR)
14	FREEZER DOOR (417)-HH	3010086600	-	-	1	1	URT FORMING (CO-LAMINAR)
15	HANDLE *F	3012626900	1	1	1	1	PBT
16	HANDLE *R	3012627000	1	1	1	1	PBT
17	COVER DOOR CAP *L	3011467300	2	2	2	2	ABS
18	COVER DOOR CAP *R	3011467400	2	2	2	2	ABS
19	CAP HANDLE	3010910000	4	4	4	4	HIPS
20	CAP SCREW	3010920200	1	1	1	1	HIPS
21	CAP DOOR BUSHING	3010918301	1	1	1	1	PP
22	COVER CAB BRACKET	3011467500	1	1	1	1	HIPS

SILVER

No	Part Name	Part code	MODEL				Description
			367	397	387	417	
1	PANEL CONTROL C/L A	3014230920	1	1	1	1	ABS + SLIVER
2	BASE CONTROL PANEL	3010312910	1	1	1	1	HIPS +SILVER
3	REFRIGERATOR DOOR (367)	3010057760	1	-	-	-	URT FORMING (CO-LAMINAR)
4	REFRIGERATOR DOOR (387)	3010057800	-	-	1	-	URT FORMING (CO-LAMINAR)
5	REFRIGERATOR DOOR (397-417)	3010057770	-	1	-	1	URT FORMING (CO-LAMINAR)
6	FREEZER DOOR (367-397)	3010086620	1	1	-	-	URT FORMING (CO-LAMINAR)
7	FREEZER DOOR (387)	3010086800	-	-	1	-	URT FORMING (CO-LAMINAR)
8	FREEZER DOOR (417)	3010086630	-	-	1	1	URT FORMING (CO-LAMINAR)
9	REFRIGERATOR DOOR (367)-HH	3010057780	1	-	-	-	URT FORMING (CO-LAMINAR)
10	REFRIGERATOR DOOR (387)-HH	3010057820	-	-	1	-	URT FORMING (CO-LAMINAR)
11	REFRIGERATOR DOOR (397-417)-HH	3010057790	-	1	-	1	URT FORMING (CO-LAMINAR)
12	FREEZER DOOR (367-397)-HH	3010086640	1	1	-	-	URT FORMING (CO-LAMINAR)
13	FREEZER DOOR (387)-HH	3010086790	-	-	1	-	URT FORMING (CO-LAMINAR)
14	FREEZER DOOR (417)-HH	3010086650	-	-	1	1	URT FORMING (CO-LAMINAR)
15	HANDLE *F	3012626920	1	1	1	1	PBT + SILVER
16	HANDLE *R	3012627020	1	1	1	1	PBT + SILVER
17	COVER DOOR CAP *L	3011467320	2	2	2	2	ABS + SILVER
18	COVER DOOR CAP *R	3011467420	2	2	2	2	ABS + SILVER
19	CAP HANDLE	3010910010	4	4	4	4	HIPS +SILVER
20	CAP SCREW	3010920210	1	1	1	1	HIPS +SILVER
21	CAP DOOR BUSHING	3010918310	1	1	1	1	PP + SILVER
22	COVER CAB BRACKET	3011467520	1	1	1	1	HIPS + SILVER

INOX (Dark gray)

No	Part Name	Part code	MODEL				Description
			367	397	387	417	
1	PANEL CONTROL C/L A	3014230910	1	1	1	1	ABS
2	BASE CONTROL PANEL	3010312910	1	1	1	1	HIPS
3	REFRIGERATOR DOOR (367)	3010057830	1	-	-	-	URT FORMING (INOX)
4	REFRIGERATOR DOOR (387)	3010057870	-	-	1	-	URT FORMING (INOX)
5	REFRIGERATOR DOOR (397-417)	3010057840	-	1	-	1	URT FORMING (INOX)
6	FREEZER DOOR (367-397)	3010086670	1	1	-	-	URT FORMING (INOX)
7	FREEZER DOOR (387)	3010086820	-	-	1	-	URT FORMING (INOX)
8	FREEZER DOOR (417)	3010086680	-	-	1	1	URT FORMING (INOX)
9	REFRIGERATOR DOOR (367)-HH	3010057850	1	-	-	-	URT FORMING (INOX)
10	REFRIGERATOR DOOR (387)-HH	3010057890	-	-	1	-	URT FORMING (INOX)
11	REFRIGERATOR DOOR (397-417)-HH	3010057860	-	1	-	1	URT FORMING (INOX)
12	FREEZER DOOR (367-397)-HH	3010086690	1	1	-	-	URT FORMING (INOX)
13	FREEZER DOOR (387)-HH	3010086810	-	-	1	-	URT FORMING (INOX)
14	FREEZER DOOR (417)-HH	3010086700	-	-	1	1	URT FORMING (INOX)
15	HANDLE *F	3012626910	1	1	1	1	PBT
16	HANDLE *R	3012627010	1	1	1	1	PBT
17	COVER DOOR CAP *L	3011467310	2	2	2	2	ABS
18	COVER DOOR CAP *R	3011467410	2	2	2	2	ABS
19	CAP HANDLE	3010910010	4	4	4	4	HIPS
20	CAP SCREW	3010920210	1	1	1	1	HIPS
21	CAP DOOR BUSHING	3010918310	1	1	1	1	PP
22	COVER CAB BRACKET	3011433310	1	1	1	1	HIPS

11. PCB CONTROL FUNCTIONS

11.1- ERF-..4A..EU, ERF-..4AR

<table>
<tr><th>NO</th><th>FUNCTION</th><th>CONTENTS</th></tr>
<tr><td>1</td><td>DISPLAY</td><td>
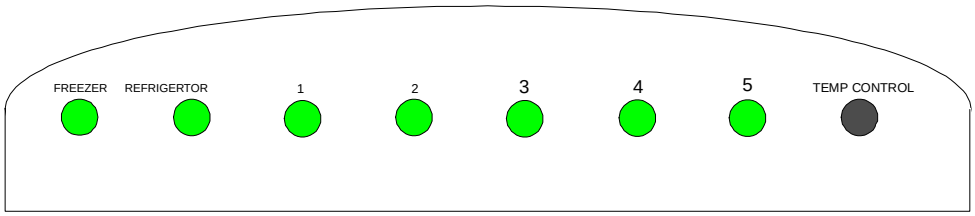

1) VAC ON : When VAC LED is ON by CONTROL SWITCH.
2) SUPER COOL ON : When SUPER COOL LED is ON by CONTROL SWITCH.
3) FREEZER TEMP DISPLAY : OK- GREEN LED on / NG RED LED on
4) REFRIGERATOR TEMP. DISPLAY : OK - GREEN LED on / NG- RED LED on
5) REFRIGERATOR TEMP. CONTROL DISPLAY : One of LEDS(LOW,MID,HIGH) is on
6) FUNCTION DISPLAY
- D1 ERROR : FREEZER RED LED is on & off one time.
- D2 ERROR : FREEZER RED LED is on & off two times.
- R1 ERROR : REF. RED LED is on & off one time.
- RT ERROR : REF. RED LED is on & off two times.
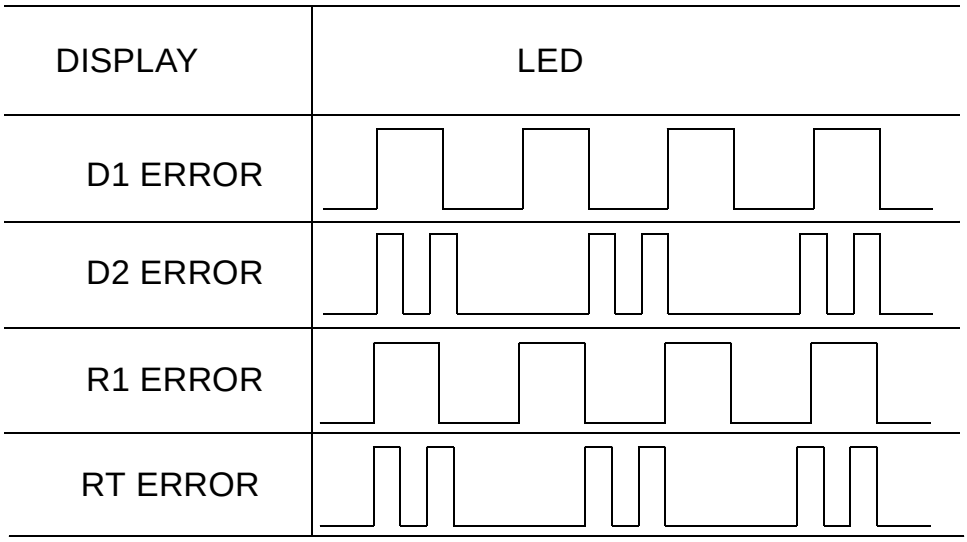

- SHORT CIRCUIT CONDITION : LOW, MID, HIGH, VAC, SUPER LED lamps are all on
</td></tr>
</table>

2	TEMPERATURE ADJUSTMENT & CONTROL	1) TEMP. CONTROL BUTTON ① TEMP. CONTROL : When TEMP CONTROL button is pressed, the led lamps LOW, MID, HIGH, VAC, SUPER COOL, LOW will be on in sequence. TEMP. will be set if the button doesn't get pressed again for 5 seconds. ②FORCED DEFROST : will be start when this button pushed for over 5 seconds continuously. ③SHORT CIRCUIT OPERATION : will be started and stopped when this button pushed over 30 times. 2) TEMPERATURE CONTROL ①COMP will be controlled by the on/off condition of each mode. ②STEP DIFF of ROOM R : 1.5 deg ③OFF point of ROOM R : 0°C ④ON/OFF DIFF of ROOM R : DEFAULT MODE : 4 deg ENERGY CONSUMPTION MODE : 5 deg 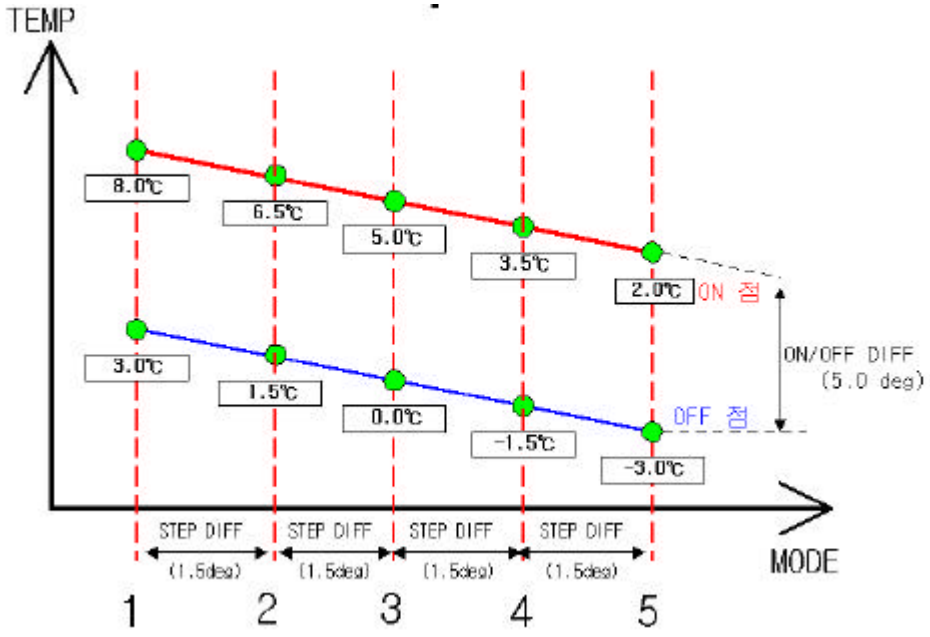 3) FORCED DEFROST ① Defrost mode will be Started independent of the cycle. ② The flow is same as the general defrost mode flow. 4) SHORT CIRCUIT OPERATION ①COMP & FAN will be on independent of the operation condition. ②The time limit of SHORT CIRCUIT OPERATION : 60 hrs
3	VACATION MODE 1	Press TEMP. CONTROL button and make 1LED lamp on.(Case: DEFAULT MODE & ENERGY CONSUMPTION MODE) ON POINT : 8.0°C OFF POINT : 3.0°C

<table>
<tr><td>4</td><td>SUPER
MODE 5</td><td>Press TEMP. CONTROL button and make 5 led lamp on.
ON POINT : 2.0°C
OFF POINT : -3.0°C</td></tr>
<tr><td>5</td><td>FREEZER
OK / NG
DISPLAY</td><td>1) Initial Condition : FREEZER RED LED LAMP on
2) OK Condition : If temperature goes down under -5°C, green led lamp is supposed to be on.
3) NG Condition : If temperature condition or time condition is satisfied, red led lamp is on.
・Temperature Condition : Over -5°C at D-SENSOR when Comp turns off.
・Time Condition : Over -5°C at D SENSOR when Comp. Is running for 4hr.
4) D1 ERROR : FREEZER RED LED LAMP - on & off
(This error means that D-SENSOR is short or open condition.)
5) D2 ERROR : FREEZER RED LED LAMP - on & off two times
(D2 ERROR happens when HEATER or TEMP. FUSE is open or there is heavy frost on the surface of EVA. On this condition, the system will be in defrost mode for 80 min.)</td></tr>
<tr><td>6</td><td>REFRIGERATOR
OK / NG
DISPLAY</td><td>1) Initial Condition : FREEZER RED LED LAMP on
2) OK Condition : If temperature goes down under 10°C, green led lamp is supposed to be on.
3) NG Condition : If temperature condition or time condition is satisfied, red led lamp is on.
・Temperature Condition : Under -7°C or over 10°C at D-SENSOR when Comp turns off.
・Time Condition : Over 10°C at D SENSOR when Comp. Is running for 4hr.
4) R1 ERROR : REFRIGERATOR RED LED LAMP - on & off
(This error means that R-SENSOR is short or open condition.)</td></tr>
<tr><td>7</td><td>DETERMINATION
OF
DEFROST</td><td>1) Starting condition of Defrost Mode
① When accumulated running time of comp. is 6, 8, 12, 30hrs.
② After Checking the condition '①' if total time(COMP on time + COMP off time) is more than 24, 48, 75hrs, then defrost mode starts immediately.
<table>
<tr><td rowspan="2">RT-SENSOR</td><td colspan="2">Accumulated running time of COMP</td><td colspan="2">Total running time of COMP</td></tr>
<tr><td>Door Open</td><td>Door Close</td><td>Door Open</td><td>Door Close</td></tr>
<tr><td>RT 33°C-</td><td>8HR</td><td>8HR</td><td>24HR</td><td>24HR</td></tr>
<tr><td>18<RT< 32°C</td><td>12HR</td><td>30HR</td><td>48HR</td><td>75HR</td></tr>
<tr><td>15<RT< 17°C</td><td>6HR</td><td>6HR</td><td>24HR</td><td>24HR</td></tr>
<tr><td>RT 14°C-</td><td>6HR</td><td>6HR</td><td>24HR</td><td>24HR</td></tr>
</table></td></tr>
</table>

<table>
<tr><td>8</td><td>DEFROST
MODE</td><td>1) General Defrost Mode
① Start : By determination of defrost
② Process : general operation - Heater on - Pause - general operation
<table>
<tr><td></td><td>R-134A</td><td>R-600A</td></tr>
<tr><td>TEMP. of Defrost return</td><td>10°C</td><td>16°C</td></tr>
<tr><td>PAUSE TIME</td><td>6min</td><td>7min</td></tr>
<tr><td>On D-sensor Error</td><td>30min</td><td>60min</td></tr>
<tr><td>Limit time</td><td>80min</td><td>80min</td></tr>
</table>
2) Forced Defrost Mode
① Start : by press TEMP. CONTROL button for 5 seconds continuously.
② Process : same as General Defrost Mode
General Defrost Mode is on for initial 30 seconds after heater is on. (for TEST)</td></tr>
<tr><td>9</td><td>INITIAL
DEFROST</td><td>1) When power is on, if the temperature at the D-sensor is under 3.5°C, then General Defrost Mode starts.</td></tr>
<tr><td>10</td><td>PREVENTION
OF COMP.
RESTART</td><td>1) RT ≤ 17 : The COMP can’t be on within 40 min after comp. is off even though R-sensor is on condition. (This is to protect comp.) - FUNCTION of LOW RT
2) RT > 8 : The COMP can’t be on within 6 min after comp. is off even though R-sensor is on condition. (This is to protect comp.)</td></tr>
<tr><td>11</td><td>ERROR
DISPLAY
&
CONTROL</td><td>1) D1 ERROR (It happens when D-SENSOR is OPEN or SHORT)
① DISPLAY : FREEZER RED LED lamp in on & off one time.
② CONTROL : Return to the limit defrost time of Defrost (30 min)
2) D2 ERROR (It happens when heater is off by time (80 min).
① DISPLAY : FREEZER RED LED lamp in on & off two times.
② CONTROL : Return to the limit defrost time of Defrost (80 min)
3) R1 ERROR (It happens when R-SENSOR is OPEN or SHORT)
① DISPLAY : REFRIGERATOR RED LED lamp in on & off one time.
② CONTROL : controlled by the condition of RT
<table>
<tr><td>RT-S TEMP</td><td>ERROR</td><td>24- -</td><td>18- -</td></tr>
<tr><td>COMP. Operating rate(%)</td><td>40%</td><td>30%</td><td>44%</td></tr>
<tr><td>ON/OFF (min)</td><td>20 / 30</td><td>15 / 35</td><td>22 / 28</td></tr>
<tr><td>NOTE</td><td>ERROR</td><td>Low RT TEMP.</td><td>General</td></tr>
</table>
③ CANCEL : when R-SENSOR is working normally.
4) RT ERROR (It happens when RT-SENSOR is OPEN or SHORT)
① DISPLAY : REFRIGERATOR RED LED lamp in on & off two times.
② CONTROL : The system is normally operating but the controlling by RT-SENSOR doesn’t work.
③ CANCELATION : when RT-SENSOR is working normally.</td></tr>
</table>

12	SHORT CIRCUIT TEST	1) START : by pressing TEMP CONTROL button 30 times continuously. 2) CANCEL : by pressing TEMP CONTROL button 30 times continuously Cf. the system generally operates when the limit time 60 hrs. passes. 3) DISPLAY : LOW, MID, HIGH, LED lamps are all on 4) CONTROL : COMP & FAN will be on independent of the operation condition. (There is no defrost mode on this test.)
13	FUNCTION OF TIME REDUCTION	1) HOW TO REDUCE: (There is no FAST KEY on PCB for MP.) 1 min : Click FAST KEY one time 30 min : If you press FAST KEY continuously, you can reduce 30 minutes on each second. 2) Practical Use : Can be applied to reduce needless time on test. EX) function of stop for 6 min, confirming the determination of defrost mode
14	LOW COOLING OPTION	1) R-SENSOR OFF POINT ADJUST (DOWN 1DEG) 2) If remove J1 when low cooling happens. Initial residence[31.4k-] + 1.5 k- =32.9 k- Operating Rsensor OFF Point -
15 `	FUNCTION OF LOW ROOM TEMPERATURE	1) LOW RT TEMP : - LOW RT TEMP A : RT SENSOR ≤ 14- - LOW RT TEMP B : 15- ≤RT SENSOR ≤ 17- 2) Control ①When Comp. is on, R-SENSOR HTR is off. When it passes 6 min after COMP. was off, R-SENSOR HTR is on. ②COMP. can't be on within 40min after COMP. is off. ③When it is Mode of General TEMP. or RT-SENSOR ERROR(open or short), R-SENSOR HTR is off. - Condition of LOW RT TEMP A - R-SENSOR Operating POINT increases 3- - Condition of LOW RT TEMP B - R-SENSOR Operating POINT increases 1- 3) Check function of R-S HTR At initial operation,, R-SENSOR HTR turn on and off four times for 8sec.

16	R OFF POINT OPTION	1) R-SENSOR OFF POINT can be adjusted by changing the input voltage of MICOM 8 pin. 2) The default of input voltage is 0V. 3) The changed OFF POINT is base OFF POINT + OFF POINT of input voltage. 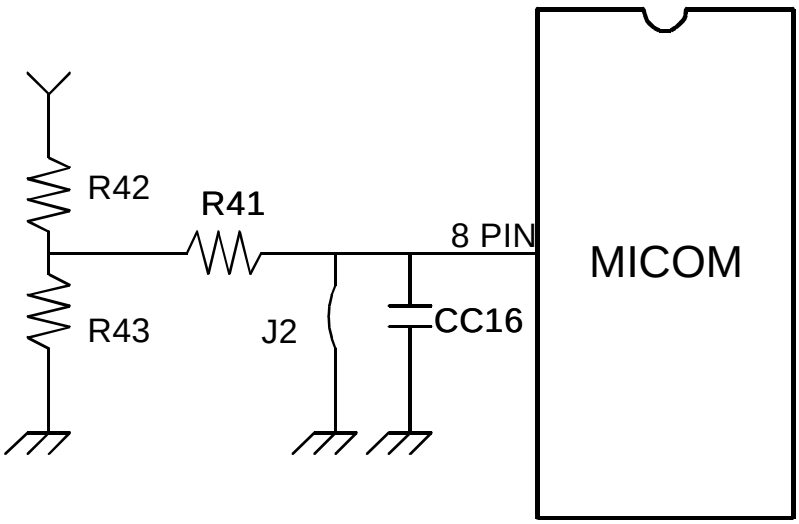 4) The change of R-SENSOR OFF POINT depend on the input voltage of MICOM

MICOM Input (V)	0	1.0	1.5	2.0	2.5	3.7	5.0
OFF POINT Variation (-)	0- (DEF)	1.0-	2.0-	3.0-	1.0–	2.0–	3.0–
R42, 43 (KΩ)	J2 (in use)	R42 : 40 R43 : 10	R42 : 23.3 R43 : 10	R42 : 15 R43 : 10	R42 : 10 R43 : 10	R42 : 3.5 R43 : 10	R42 : 10 R43 : DEL

5) APPLICATION (MAIN PCB)

① Default : MICOM8 PORT – 0V

② Change of R OFF POINT 1.0 deg - : changing R42, R43 after deleting J2

EX) ①delete J2 ②R42 : 10 KΩ ③ R43 : 10 KΩ

11.1- ERF-..7A...EU, ERF-..7AR

<table>
<tr><th>NO</th><th>FUNCTION</th><th>CONTENTS</th></tr>
<tr><td>1</td><td>DISPLAY</td><td>


1) CONTROL BUTTON
① Temperature of Room R adjustment
② When you press this button, the temperature is controlled in sequence.
• Display When VAC Mode was chosen : VAC LED lamp on
• Display When 1step Mode was chosen : VAC~1 LED lamp on
• Display When 2step Mode was chosen : 1~2 LED lamps on
• Display When 3step Mode was chosen : 1~3 LED lamps on
• Display When 4step Mode was chosen : 1~4 LED lamps on
• Display When 5step Mode was chosen : 1~5 LED lamps on
• Display When TURBO Mode was chosen : 1~TURBO LED lamps on
2) ARTIFICIAL INTELLIGENCE CONTROL BUTTON
① When you press the ‘FUZZY’ button : VAC~4 LED lamps and FUZZY LED lamp on.
② If you press it one more time (it means FUZZY is off.), you can adjust the temperature of REF. by CONTROL button. If FUZZY is off, it turns to the last mode of TEMP.
3) TEMP. BUTTON
① If you press ‘TEMP’ button one time, it displays the temperature of the refrigerator compartment. If you press ‘TEMP’ button two times continuously, it displays the temperature of the freezer compartment.
(Unit : ℃)
<table>
<tr><td></td><td>VAC</td><td>1</td><td>2</td><td>3</td><td>4</td><td>5</td><td>TURBO</td><td>FUZZY</td></tr>
<tr><td>Room R</td><td>6</td><td>5</td><td>4</td><td>4</td><td>3</td><td>1</td><td>0</td><td>3</td></tr>
<tr><td>Room F</td><td>-17</td><td>-18</td><td>-19</td><td>-19</td><td>-20</td><td>-22</td><td>-23</td><td>-20</td></tr>
</table>
② Display led lamp will turn off within 5 seconds.
</td></tr>
<tr><td>2</td><td>BUTTON ADJUSTMENT</td><td>
1) CONTROL BUTTON
① Temperature Adjustment : If you press the CONTROL button, it follows
4 (MID, Default) → 5 → TURBO → VAC → 1 → 2 → 3 →4
• If you don’t press the button again in 4 seconds, temperature will be set.
</td></tr>
</table>

2	BUTTON ADJUSTMENT	② Forced Defrost Mode : Start by pressing CONTROL button for 5 seconds continuously. ③ SHORT CIRCUIT TEST : start and cancel by pressing CONTROL button 30 times continuously. 2) FUZZY BUTTON ① Press the FUZZY button to turn on & off. 3) TEMP. BUTTON ① If you press 'TEMP' button one time, it displays the temperature of Room R. If you press 'TEMP' button two times continuously, it displays the temperature of Room F.
3	TEMPERATURE ADJUSTMENT & CONTROL	1) TEMP. CONTROL BUTTON ① COMP. will be controlled by ON / OFF point of each mode. ② STEP DIFF of ROOM R: •VAC ~ 4 → 1deg •4~ TURBO →1.5 deg ③ ROOM R MIDDLE OFF point : -1.0°C (7 STEPS) ④ ON/OFF DIFF. of ROOM R : - DEFAULT MODE & ENERGY CONSUMPTION MODE: 5 deg - LOW RT & HIGH RT : DEFAULT MODE : 4 deg 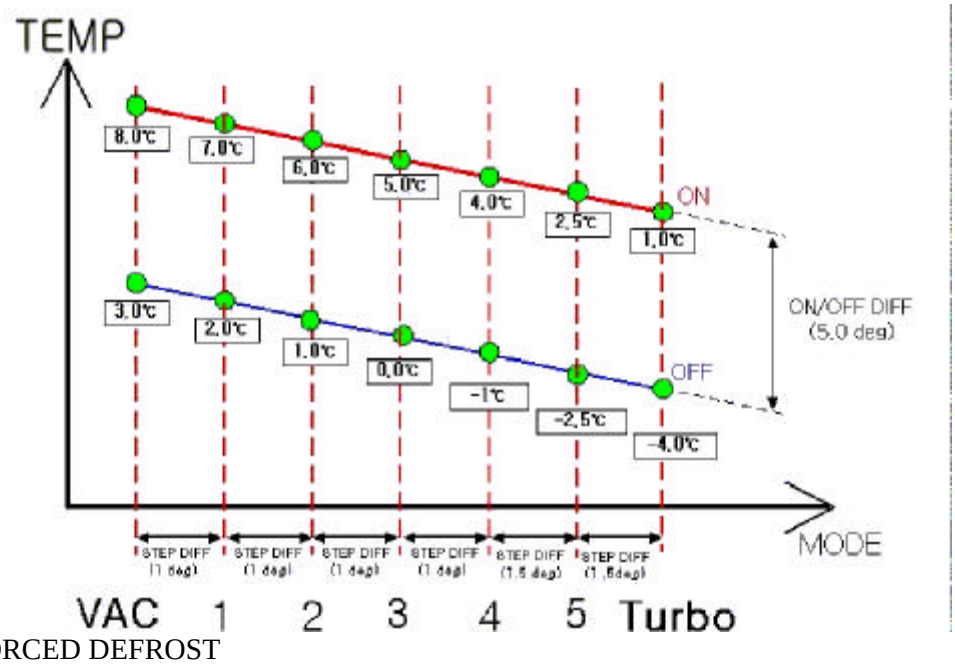 2) FORCED DEFROST ① FORCED Defrost mode will be Started independent of the cycle. ② The flow is same as the general defrost mode flow. 3) SHORT CIRCUIT OPERATION ①COMP & FAN will be on independent of the operation condition. ②The time limit of SHORT CIRCUIT OPERATION : 60 hrs

<table>
<tr><td>4</td><td>VAC MODE</td><td>Press CONTROL button and make VAC led lamp on.
1) Controlled by room R
2) Default & energy consumption mode - ON /OFF POINT: 8°C / 3°C</td></tr>
<tr><td>5</td><td>TURBO MODE</td><td>Press CONTROL button and make TURBO LED lamp on.
1) Controlled by room R
2) Default & energy consumption mode - ON /OFF POINT: 1°C / -4°C</td></tr>
<tr><td>6</td><td>DETERMINATION OF DEFROST</td><td>
<table>
<tr><td rowspan="2">RT-SENSOR</td><td colspan="2">Accumulated running time of COMP</td><td colspan="2">Total running time of COMP</td></tr>
<tr><td>Door Open</td><td>Door Close</td><td>Door Open</td><td>Door Close</td></tr>
<tr><td>RT 33°C-</td><td>8HR</td><td>8HR</td><td>24HR</td><td>24HR</td></tr>
<tr><td>18<RT< 32°C</td><td>12HR</td><td>30HR</td><td>48HR</td><td>75HR</td></tr>
<tr><td>15<RT< 17°C</td><td>6HR</td><td>6HR</td><td>24HR</td><td>24HR</td></tr>
<tr><td>RT 14°C-</td><td>6HR</td><td>6HR</td><td>24HR</td><td>24HR</td></tr>
</table>
</td></tr>
<tr><td>7</td><td>DEFROST MODE</td><td>1) General Defrost Mode
① Start : By determination of defrost
② Process : general operation - Heater on - Pause - general operation
<table>
<tr><td></td><td>R-134A</td><td>R-600A</td></tr>
<tr><td>TEMP. of Defrost return</td><td>10°C</td><td>16°C</td></tr>
<tr><td>PAUSE TIME</td><td>6min</td><td>7min</td></tr>
<tr><td>On D-sensor Error</td><td>30min</td><td>60min</td></tr>
<tr><td>Limit time</td><td>80min</td><td>80min</td></tr>
</table>
2) Forced Defrost Mode
① Start : by press TEMP. CONTROL button for 5 seconds continuously.
② Process : same as General Defrost Mode
General Defrost Mode is on for initial 30 seconds after heater is on. (for TEST)</td></tr>
<tr><td>8</td><td>INITIAL DEFROST</td><td>1) When power is on, if the temperature at the D-sensor is under 3.5°C, then General Defrost Mode starts.
2) When the INITIAL DEFROST Mode starts, heater will be right on and defrost mode will starts.</td></tr>
<tr><td>9</td><td>PREVENTION OF COMP. RESTART</td><td>1) The COMP can’t be on within 40 min after comp. is off even though R-condition. (This is to protect comp.) - FUNCTION of LOW RT
2) The COMP can’t be on within 6 min after comp. is off even though R-sensor is on condition. (This is to protect comp.) - DEFAULT OPERATIO N</td></tr>
</table>

<table>
<tr>
<td>10</td>
<td>ERROR
DISPLAY
&
CONTROL</td>
<td>❖ORDER OF PRIORITY FOF THE ERROR DISPLAY R1>D1>D2>RT
1) R1 ERROR (It happens when R-SENSOR is OPEN or SHORT)
① DISPLAY : R1 ERROR displays on the 88 segment.
② CONTROL : controlled by the condition of RT

<table>
<tr><td>RT-S TEMP</td><td>ERROR</td><td>17-</td><td>18-</td></tr>
<tr><td>COMP. Operating rate(%)</td><td>40%</td><td>30%</td><td>44%</td></tr>
<tr><td>ON/OFF (min)</td><td>20 / 30</td><td>15 / 35</td><td>22 / 28</td></tr>
</table>

③ CANCELATION : when R-SENSOR is working normally.
2) D1 ERROR (It happens when D-SENSOR is OPEN or SHORT)
① DISPLAY : D1 ERROR displays on the 88 segment.
② CONTROL : Return to the limit defrost time of Defrost (30 min/60min)
3) D2 ERROR (It happens when heater is off by time (80 min).
① DISPLAY : D2 ERROR displays on the 88 segment.
② CONTROL : Return to the limit defrost time of Defrost (80 min)
4) RT ERROR (It happens when RT-SENSOR is OPEN or SHORT)
① CONTROL : The system is normally operating but the controlling by RT-SENSOR doesn’t work.
③ CANCELATION : when RT-SENSOR is working normally.</td>
</tr>
<tr>
<td>11</td>
<td>SHORT
CIRCUIT
TEST</td>
<td>1) START : by pressing TEMP. CONTROL button 30 times continuously.
2) CANCEL : by pressing TEMP. CONTROL button 30 times continuously
Cf. the system generally operates when the limit time 60 hrs. passes.
3) DISPLAY : All of LED lamps are on.
4) CONTROL : COMP & FAN will be on independent of the operation condition.
(There is no defrost mode on this test.)</td>
</tr>
<tr>
<td>12</td>
<td>FUNCTION
OF
TIME
REDUCTION</td>
<td>1) HOW TO REDUCE: (There is no FAST KEY on PCB for MP.)
1 min : Click FAST KEY one time
30 min : If you press FAST KEY continuously, you can reduce 30 minutes on each second.
2) Practical Use : Can be applied to reduce needless time on test.
EX) function of stop for 6 min</td>
</tr>
</table>

13	FUNCTION OF ARTIFICIAL INTELLIGENCE	1) START : by pressing FUZZY button one time 2) CANCEL : by pressing FUZZY button again. 3) DISPLAY : Start - VAC~4 LED lamps and FUZZY LED lamp on. Cancel - FUZZY LED lamp off. It returns to the last TEMP. MODE. 4) CONTROL by RT-S - RT-S 18°C - : MIDDLE OFF POINT OPERATION - 15<RT<17°C: MIDDLE OFF POINT + 3 DEG - RT-S 14°C - : MIDDLE OFF POINT + 1 DEG
14	LOW COOLING OPTION	1) R-SENSOR OFF POINT ADJUST (DOWN 1DEG) 2) If remove J1 when low cooling happens. Initial residence[31.4k-] + 1.5 k- =32.9 k- Operating R-sensor OFF Point -
15	FUNCTION OF LOW ROOM TEMPERATURE	1) LOW RT TEMP : - LOW RT TEMP A : RT SENSOR ≤ 14- - LOW RT TEMP B : 15- ≤RT SENSOR ≤ 17- 2) Control ①When Comp. is on, R-SENSOR HTR is off. When it passes 6 min after COMP. was off, R-SENSOR HTR is on. ②COMP. can't be on within 40min after COMP. is off. ③When it is Mode of General TEMP. or RT-SENSOR ERROR(open or short), R-SENSOR HTR is off. - Condition of LOW RT TEMP A - R-SENSOR Operating POINT increases 3- - Condition of LOW RT TEMP B - R-SENSOR Operating POINT increases 1-

16	R-SENSOR OFF POINT ADJUSTING OPTION	1) R-SENSOR OFF POINT can be adjusted by changing the input voltage of Micom 26pin. 2) The default of input voltage is 0V. 3) The changed OFF POINT is base OFF POINT + OFF POINT of input voltage.

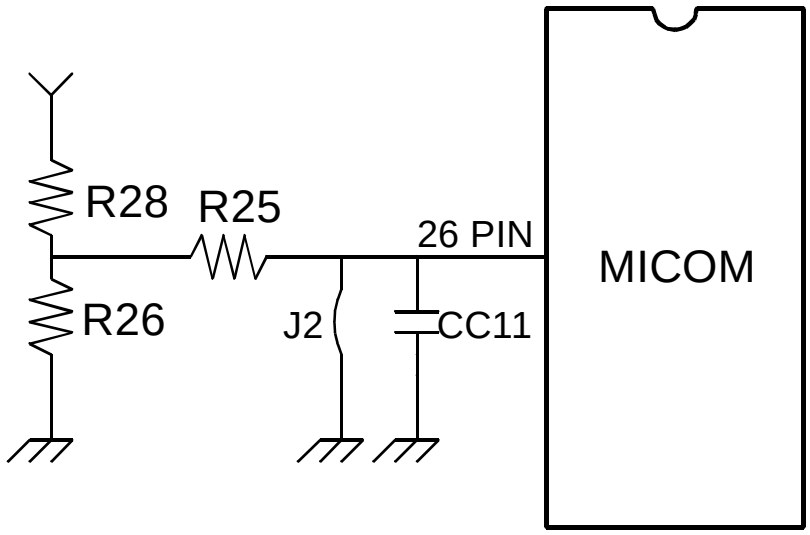

4) The change of R-SENSOR OFF POINT depend on the input voltage of MICOM

MICOM Input (V)	0	1.0	1.5	2.0	2.5	3.7	5.0
OFF POINT Variation (-)	-1.0 (DEF)	1.0-	2.0-	3.0-	1.0–	2.0–	3.0–
R28, 26 (KΩ)	J2 (in use)	R28:40 R26:10	R28:23.3 R26:10	R28:15 R26 :10	R28:10 R26 :10	R28:3.5 R26:10	R28 : 10 R26 : DEL

5) APPLICATION (MAIN PCB)

① Default : MICOM26 PORT– 0V

② Change of R OFF POINT 1.0 deg - : changing R28, R26 after deleting J2

EX) ①delete J2 ②R31 : 10 KΩ ③ R32 : 10 KΩ



Daewoo Electronics Manufacturing España s.a
Poligono industrial Jundiz
C/Zurrupitieta nº27 01015
Vitoria-Gasteiz
Spain