SIEMENS

KI81F..

Refrigerator

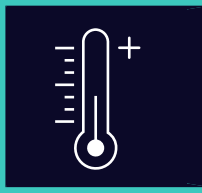

EN Information for Use

Register your appliance on My Siemens and discover exclusive services and offers.

Siemens Home Appliances

Table of contents

1 Safety 3
1.1 General information 3
1.2 Intended use 3
1.3 Restriction on user group 3
1.4 Safe transport 3
1.5 Safe installation 4
1.6 Safe use 5
1.7 Damaged appliance 6

2 Preventing material damage 7

3 Environmental protection and saving energy 7
3.1 Disposing of packaging 7
3.2 Saving energy 7

4 Installation and connection 8
4.1 Scope of delivery 8
4.2 Criteria for the installation location 8
4.3 Installing the appliance 9
4.4 Preparing the appliance for the first time 9
4.5 Connecting the appliance to the electricity supply 9

5 Familiarising yourself with your appliance 10
5.1 Appliance 10
5.2 Control panel 11

6 Features 12
6.1 Shelf 12
6.2 Variable shelf 12
6.3 Extendable shelf 12
6.4 Fruit and vegetable container 12
6.5 Cool-fresh container 13
6.6 Butter and cheese compartment 13
6.7 Door tray 13
6.8 Accessories 13

7 Basic operation 13
7.1 Switching on the appliance 13
7.2 Operating tips 13
7.3 Switching off the appliance 13
7.4 Setting the temperature 14

8 Additional functions 14
8.1 Super cooling 14

9 Alarm 14
9.1 Door alarm 14

10 Refrigerator compartment 14
10.1 Tips for storing food in the refrigerator compartment 15
10.2 Chill zones in the refrigerator compartment 15

11 Cool-fresh compartment 15
11.1 Storage times in the cool-fresh compartment at 0 °C ... 15

12 Defrosting 15
12.1 Defrosting in the refrigerator compartment 15
12.2 Defrosting in the cool-fresh compartment 16

13 Cleaning and servicing 16
13.1 Preparing the appliance for cleaning 16
13.2 Cleaning the appliance 16
13.3 Removing the fittings 17
13.4 Removing appliance components 18

14 Troubleshooting 19
14.1 Conducting an appliance self-test 21

15 Storage and disposal 21
15.1 Taking the appliance out of operation 21
15.2 Disposing of old appliance ... 22

16 Customer Service 22
16.1 Product number (E-Nr.) and production number (FD) 23

17 Technical data 23

⚠ 1 Safety

Observe the following safety instructions.

1.1 General information

- Read this instruction manual carefully.
- Keep the instruction manual and the product information safe for future reference or for the next owner.
- Do not connect the appliance if it has been damaged in transit.

1.2 Intended use

This appliance is only intended to be fully fitted in a kitchen.

Only use this appliance:
- For chilling food.
- in private households and in enclosed spaces in a domestic environment.
- Up to an altitude of 2000 m above sea level.

1.3 Restriction on user group

This appliance may be used by children aged 8 or over and by people who have reduced physical, sensory or mental abilities or inadequate experience and/or knowledge, provided that they are supervised or have been instructed on how to use the appliance safely and have understood the resulting dangers.
Do not let children play with the appliance.
Cleaning and user maintenance must not be performed by children unless they are being supervised.
Children above the age of three years old and younger than eight years old may load and unload the the fridge-freezer.

1.4 Safe transport

⚠ WARNING – Risk of injury!
The heavy weight of the appliance may result in injury when lifted.
▸ Do not lift the appliance on your own.

1.5 Safe installation

⚠ WARNING – Risk of electric shock!

Incorrect installation is dangerous.

- ▸ Connect and operate the appliance only in accordance with the specifications on the rating plate.
- ▸ Connect the appliance to a power supply with alternating current only via a properly installed socket with earthing.
- ▸ The protective conductor system of the domestic electrical installation must be properly installed.
- ▸ Never equip the appliance with an external switching device, e.g. a timer or remote control.
- ▸ When the appliance is installed, the mains plug of the power cord must be freely accessible. If free access is not possible, an isolating switch must be integrated into the permanent electrical installation according to the installation regulations.
- ▸ When installing the appliance, check that the power cable is not trapped or damaged.

If the insulation of the power cord is damaged, this is dangerous.

- ▸ Never let the power cord come into contact with heat sources.

⚠ WARNING – Risk of explosion!

If the appliance's ventilation openings are closed off, a leak in the refrigeration circuit may result in a flammable mixture of gas and air.

- ▸ Keep ventilation openings in the appliance casing or in the integrated casing clear of obstruction.

⚠ WARNING – Risk of fire!

It is dangerous to use an extended power cord and non-approved adapters.

- ▸ Do not use extension cables or multiple socket strips.
- ▸ Only use adapters and power cords approved by the manufacturer.
- ▸ If the power cord is too short and a longer one is not available, please contact an electrician to have the domestic installation adapted.

Portable multiple socket strips or portable power supply units may overheat and cause a fire.

- ▸ Do not place portable multiple socket strips or power supply units on the back of the appliance.

1.6 Safe use

⚠ WARNING – Risk of electric shock!

An ingress of moisture can cause an electric shock.

- ▸ Only use the appliance in enclosed spaces.
- ▸ Never expose the appliance to intense heat or humidity.
- ▸ Do not use steam- or high-pressure cleaners to clean the appliance.

⚠ WARNING – Risk of suffocation!

Children may put packaging material over their heads or wrap themselves up in it and suffocate.

- ▸ Keep packaging material away from children.
- ▸ Do not let children play with packaging material.

Children may breathe in or swallow small parts, causing them to suffocate.

- ▸ Keep small parts away from children.
- ▸ Do not let children play with small parts.

⚠ WARNING – Risk of explosion!

If the cooling circuit is damaged, flammable refrigerant may escape and explode.

- ▸ To accelerate the defrosting process, do not use any other mechanical devices or means other than those recommended by the manufacturer.
- ▸ If food is stuck to the freezer compartment, loosen it with a blunt object such as the handle of a wooden spoon.

Products which contain flammable propellants and explosive substances may explode, e.g. spray cans.

- ▸ Do not store products which contain flammable propellants (e.g. spray cans) or explosive substances in the appliance.

⚠ WARNING – Risk of fire!

Electrical devices within the appliance may cause a fire, e.g. heaters or electric ice makers.

- ▸ Do not operate electrical devices within the appliance.

⚠ WARNING – Risk of injury!

Containers that contain carbonated drinks may burst.

- ▸ Do not store containers that contain carbonated drinks in the cool-fresh compartment.

Injury to the eyes caused by escaping flammable refrigerant and hazardous gases.

- ▸ Do not damage the tubes of the refrigerant circuit or the insulation.

⚠ CAUTION – Risk of harm to health!

To prevent food from being contaminated, you must observe the following instructions.

- ▸ If the door is open for an extended period of time, this may lead to a considerable temperature increase in the compartments of the appliance.
- ▸ Regularly clean the surfaces that may come into contact with food and accessible drain systems.
- ▸ Store raw meat and fish in suitable containers in the refrigerator so that they do not touch or drip on other food.
- ▸ If the fridge/freezer is empty for an extended period of time, switch off the appliance, defrost it, clean it and leave the door open to prevent the formation of mould.

Metal or metal-style parts in the appliance may contain aluminium. If acidic food comes into contact with aluminium in the appliance, aluminium foil ions may pass into the food.

- ▸ Do not consume soiled food.

1.7 Damaged appliance

⚠ WARNING – Risk of electric shock!

If the appliance or the power cord is damaged, this is dangerous.

- ▸ Never operate a damaged appliance.
- ▸ Never pull on the power cord to unplug the appliance. Always unplug the appliance at the mains.
- ▸ If the appliance or the power cord is damaged, immediately unplug the power cord or switch off the fuse in the fuse box.
- ▸ Call customer service. →*Page 22*

Improper repairs are dangerous.

- ▸ Repairs to the appliance should only be carried out by trained specialist staff.

- ▸ Only use genuine spare parts when repairing the appliance.
- ▸ If the power cord of this appliance is damaged, it must be replaced by the manufacturer, the manufacturer's Customer Service or a similarly qualified person in order to prevent any risk.

⚠ WARNING – Risk of fire!



If the tubes are damaged, flammable refrigerant and harmful gases may escape and ignite.

- ▸ Keep naked flames and ignition sources away from the appliance.
- ▸ Ventilate the room.
- ▸ Switch off the appliance. →*Page 13*
- ▸ Unplug the mains plug from the mains or switch off the circuit breaker in the fuse box.
- ▸ Call customer service. →*Page 22*

2 Preventing material damage

ATTENTION

Using the base, runners or appliance doors as a seat surface or climbing surface may damage the appliance.

- ▸ Do not stand or support yourself on the base, runners or doors.

Contamination with oil or fat may cause plastic parts and door seals to become porous.

- ▸ Keep plastic parts and door seals free of oil and grease.

Metal or metal-style parts in the appliance may contain aluminium. When aluminium comes into contact with acidic foods, it corrodes and discolours.

- ▸ Only store packaged food in the appliance.

If you clean fittings and accessories in the dishwasher, this may cause them to become deformed or discolour.

- ▸ Never clean fittings and accessory in the dishwasher.

3 Environmental protection and saving energy

3.1 Disposing of packaging

The packaging materials are environmentally compatible and can be recycled.

- ▸ Sort the individual components by type and dispose of them separately.

3.2 Saving energy

If you follow these instructions, your appliance will use less power.

Selecting the installation location

- ▪ Keep the appliance out of direct sunlight.

- Install the appliance as far away as possible from heating elements, cookers and other heat sources:
  - Maintain a 30 mm clearance to electric or gas cookers.
  - Maintain a 300 mm clearance to oil or solid-fuel cookers.
- Use a niche depth of 560 mm.
- Never cover or block the external ventilation openings.

Saving energy during use

Note: The arrangement of the fittings does not affect the energy consumption of the appliance.

- Open the appliance only briefly and then close it carefully.
- Never cover or block the interior ventilation openings or the exterior ventilation openings.
- Transport purchased food in a cool bag and place in the appliance quickly.
- Allow warm food and drinks to cool down before storing them.
- Thaw frozen food in the refrigerator compartment to utilise the low temperature of the food.
- Always leave some space between the food and to the back panel.

4 Installation and connection

4.1 Scope of delivery

After unpacking all parts, check for any transport damage and for completeness of delivery.
If you have any complaints, contact your dealer or our after-sales service →*Page 22*.

The delivery consists of the following:

- Built-in appliance
- Equipment and accessories [1]
- Installation material
- Installation instructions
- User manual
- Customer service directory
- Warranty enclosure [2]
- Energy label
- Information on energy consumption and noises

4.2 Criteria for the installation location

⚠ **WARNING**
Risk of explosion!
If the appliance is in a space that is too small, a leak in the refrigeration circuit may result in a flammable mixture of gas and air.

- ▸ Only install the appliance in a space with a volume of at least 1 m^3 per 8 g refrigerant. The volume of refrigerant is indicated on the rating plate.
  → *"Appliance", Fig.* **1**/7 *Page 11*

The weight of the appliance ex works may be up to 70 kg depending on the model.
The subfloor must be sufficiently stable to bear the weight of the appliance.
This refrigerator is intended for use at ambient temperatures of 10 °C to 43 °C.
The appliance is fully functional within the permitted room temperature.
If the appliance is operated at colder room temperatures, the appliance will not be damaged up to a room temperature of 5 °C.

[1] Depending on the appliance specifications
[2] Not in all countries

Niche dimensions

Observe the niche dimensions if you install your appliance in the niche. If this is not the case, problems may occur when installing the appliance.

Niche depth

Install the appliance in the recommended niche depth of 560 mm.
If the niche depth is smaller, the energy consumption increases slightly.
The niche depth must be a minimum 550 mm.

Niche width

An inside niche width of at least 560 mm is required for the appliance.

Over-and-under and side-by-side installation

If you want to install 2 refrigerating appliances one over the other or side by side, you must maintain a clearance of at least 150 mm between the appliances. Selected appliances can be installed without a minimum clearance. Ask your dealer or kitchen planner about this.

4.3 Installing the appliance

- ▸ Install the appliance in accordance with the enclosed installation instructions.

4.4 Preparing the appliance for the first time

1. Remove the informative material.
2. Remove the protective foil and transit bolts, e.g. remove the adhesive strips and carton.
3. Clean the appliance for the first time. →*Page 16*

4.5 Connecting the appliance to the electricity supply

1. Insert the mains plug of the appliance's power cable in a socket nearby.
   The connection data of the appliance can be found on the rating plate.
   → *"Appliance", Fig.* **1**/7 *Page 11*
2. Check the mains plug is inserted properly.

✔ The appliance is now ready for use.

5 Familiarising yourself with your appliance

5.1 Appliance

You can find an overview of the parts of your appliance here.

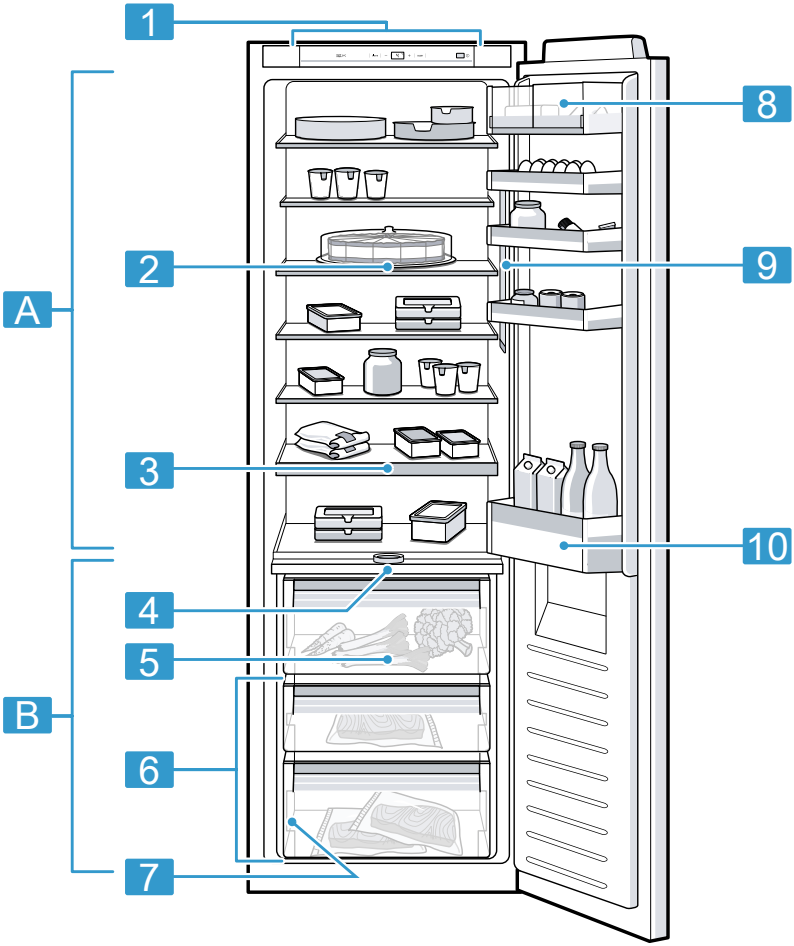

1

Deviations between your appliance and the diagrams may differ with regard to their features and size.

A	Refrigerator compartment →*Page 14*
B	Cool-fresh compartment →*Page 15*
1	Control panel →*Page 11*

2	Variable shelf →*Page 12*[1]
3	Extendable shelf →*Page 12*[1]
4	Partition with humidity controller →*Page 12*
5	Fruit and vegetable container →*Page 12*
6	Cool-fresh container →*Page 13*
7	Rating plate →*Page 23*
8	Butter and cheese compartment →*Page 13*[1]
9	Lighting
10	Door tray for large bottles →*Page 13*

5.2 Control panel

You can use the control panel to configure all functions of your appliance and to obtain information about the operating status.

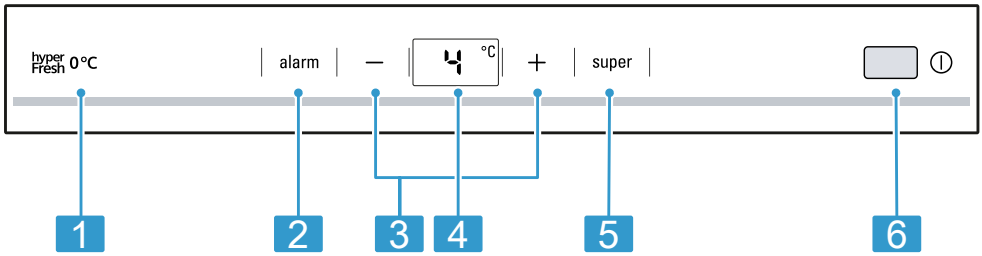

2

1	0 °C lights up when the appliance is operating.
2	alarm switches the warning signal off.
3	Displays the set temperature for the refrigerator compartment in °C.
4	–/+ sets the temperature of the refrigerator compartment.
5	super switches Super cooling on or off.
6	⏻ switches the appliance on or off.

[1] Depending on the appliance specifications

6 Features

The features of your appliance depend on the model.

6.1 Shelf

To vary the shelf as required, you can remove the shelf and re-insert it elsewhere.
→ *"Removing the shelf", Page 17*

6.2 Variable shelf

Use the variable shelf to store tall items, e.g. cans or bottles, on the shelf below.
You can remove the front section of the variable shelf and slide it below the rear part of the shelf.

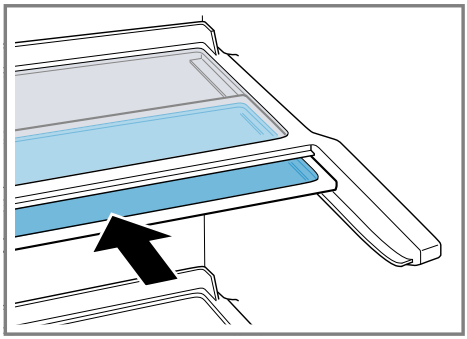

6.3 Extendable shelf

In order to achieve an improved overview and to remove food more quickly, pull out the extendable shelf.

6.4 Fruit and vegetable container

Store fresh fruit and vegetables loose in the fruit and vegetable container. Cover any chopped fruit and vegetables, or store in air-tight packaging. You can adjust the humidity in the fruit and vegetable container via the humidity controller on the partition and a special seal.

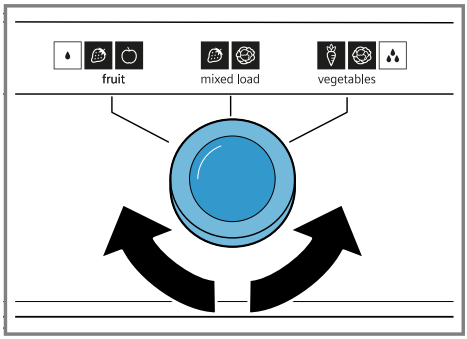

The air humidity in the fruit and vegetable container can be set according to the type and amount of food to be stored by turning the humidity controller:

- Turn to the left for low humidity when primarily storing fruit or if the appliance is very full.
- Turn to the middle for medium humidity for a mixed load.
- Turn to the right for high humidity when primarily storing vegetables or when the appliance is not very full.

Condensation may form in the fruit and vegetable container depending on the food and quantity stored. Remove the condensation with a dry cloth and adjust the air humidity to a lower setting using the humidity controller.
To ensure that the quality and aroma are retained, store fruit and vegetables that are sensitive to cold outside of the appliance at temperatures of approx. 8 °C to 12 °C, e.g. pineapple, bananas, citrus fruits, cucumbers, courgettes, peppers, tomatoes and potatoes.

6.5 Cool-fresh container

Use the lower temperatures in the cool-fresh container to store highly perishable food, e.g. fish, meat and sausages.

6.6 Butter and cheese compartment

Store butter and hard cheese in the butter and cheese compartment.

6.7 Door tray

To adjust the door tray as required, you can remove the door tray and reinsert elsewhere.
→ *"Removing door tray", Page 17*

6.8 Accessories

Use original accessories. These have been made especially for your appliance.
The accessories for your appliance depend on the model.

Egg tray

Store eggs safely on the egg tray.

Bottle holder

The bottle holder prevents bottles from falling over when the appliance door is opened and closed.

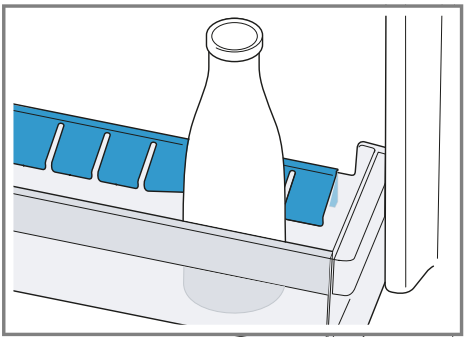

7 Basic operation

7.1 Switching on the appliance

1. Press ⏻.
✔ The appliance begins to cool.
2. Set the required temperature.
→ *Page 14*

7.2 Operating tips

- Once you have switched on the appliance, the set temperature is only reached after several hours. Do not put any food in the appliance until the set temperature has been reached.
- The housing to the left, the right and beneath the cool-fresh compartment may heat up slightly temporarily. This prevents condensation in the area of the door seal.
- When closing the door, make sure that the door is not blocked by stored items.
- When you close the door, a vacuum may be created. The door is then difficult to open again. Wait a moment until the vacuum is offset.
- The temperature in the appliance varies due to the following conditions:
  - How often the appliance is opened
  - Load capacity
  - Temperature of newly stored food
  - Ambient temperature
  - Direct sunlight

7.3 Switching off the appliance

▸ Press ⏻.

7.4 Setting the temperature

Setting the refrigerator compartment temperature

- Press −/+ repeatedly until the temperature display shows the required temperature setting.
  The recommended temperature in the refrigerator compartment is 4 °C.

Setting the cool-fresh compartment temperature

Note: The standard setting of the cool-fresh compartment is preset at 0. Setting 0 corresponds to a temperature of around 0 °C. You can set the temperature in the cool-fresh compartment to 3 settings warmer or colder.

Tip: If frost forms on the food items in the cool-fresh compartment, set a higher cool-fresh compartment temperature.

1. Press and hold super until the temperature display flashes.
2. Press −/+ to change the setting.
   - Setting −3 corresponds to the coldest setting.
   - Setting +3 corresponds to the warmest setting.

✔ The selected setting is saved after one minute.

8 Additional functions

Find out which additional functions can be used for your appliance.

8.1 Super cooling

With Super cooling, the refrigerator compartment cools as cold as possible.

Switch on Super cooling before placing large quantities of food in the refrigerator compartment.

Note: When Super cooling is switched on, increased noise may occur.

Switching on Super cooling

- Press **super**.

✔ "super" lights up.

Note: After approx. 15 hours, the appliance switches to normal operation.

Switching off Super cooling

- Press **super**.

✔ The previously set temperature is displayed.

9 Alarm

9.1 Door alarm

If the appliance door is open for a while, the door alarm switches on. A warning tone sounds.

Switching off the door alarm

- Close the appliance door or press **alarm**.

✔ The warning tone is switched off.

10 Refrigerator compartment

You can keep dairy products, eggs, prepared meals, pastries, open preserves and hard cheese in the refrigerator compartment.
The temperature can be set from 3 °C to 8 °C.
The refrigerator compartment can also be used to store highly perishable foods in the short to medium term. The lower the selected temperature, the longer the food remains fresh.

10.1 Tips for storing food in the refrigerator compartment

- Only store food when fresh and undamaged.
- Store food covered or in air-tight packaging.
- To avoid impeding the circulation of air and to prevent food from freezing, do not place food so that it has direct contact with the back wall.
- Allow hot food and drinks to cool down first before placing in the appliance.
- Observe the best-before date or use-by date specified by the manufacturer.

10.2 Chill zones in the refrigerator compartment

The air circulation in the refrigerator compartment creates different chill zones.

Coldest zone

The coldest zone is on the partition and in the door tray for large bottles.

Tip: Store highly perishable food such as fish, sausages and meat in the cool-fresh compartment.
→ *"Cool-fresh compartment", Page 15*

Warmest zone

The warmest zone is at the very top of the door.

Tip: Store food that does not spoil easily in the warmest zone, e.g. hard cheese and butter. Cheese can then continue to release its aroma and the butter will still be easy to spread.

11 Cool-fresh compartment

In the cool-fresh compartment, you can keep fresh food fresh up to three times longer than in the refrigerator compartment.
The temperature in the cool-fresh compartment is kept at around 0 °C. Storing food in the fresh compartment retains the quality of the food better. The low temperature and the optimum moisture provide ideal storage conditions for fresh food.

11.1 Storage times in the cool-fresh compartment at 0 °C

The storage times are dependent on the original quality of your food.

Food	Storage time
Fresh fish, seafood	up to 3 days
Poultry, meat (boiled/fried)	up to 5 days
Beef, pork, lamb, sausage (cold meat)	up to 7 days
Smoked fish, broccoli	up to 14 days
Salad greens, fennel, apricots, plums	up to 21 days
Soft cheese, yoghurt, quark, buttermilk, cauliflower	up to 30 days

12 Defrosting

12.1 Defrosting in the refrigerator compartment

The refrigerator compartment in your appliance defrosts automatically.

12.2 Defrosting in the cool-fresh compartment

The cool-fresh compartment in your appliance defrosts automatically.

13 Cleaning and servicing

To keep your appliance working efficiently for a long time, it is important to clean and maintain it carefully. Customer Service must clean inaccessible points. Cleaning by customer service can give rise to costs.

13.1 Preparing the appliance for cleaning

1. Switch off the appliance. →*Page 13*
2. Disconnect the appliance from the power supply.
   Unplug the appliance from the mains or switch off the circuit breaker in the fuse box.
3. Take out all of the food and store it in a cool place.
   Place ice packs (if available) onto the food.
4. If there is a layer of hoarfrost, allow this to defrost.
5. Remove all fittings and accessories from the appliance. →*Page 17*
6. Remove the partition. →*Page 18*
7. Remove the cover. →*Page 18*
8. Remove the telescopic rails. →*Page 18*

13.2 Cleaning the appliance

⚠ WARNING
Risk of electric shock!
An ingress of moisture can cause an electric shock.
- Do not use steam- or high-pressure cleaners to clean the appliance.

Liquid in the lighting or in the controls can be dangerous.
- The rinsing water must not drip into the lighting or controls.

ATTENTION
Unsuitable cleaning products may damage the surfaces of the appliance.
- Do not use hard scouring pads or cleaning sponges.
- Do not use harsh or abrasive detergents.
- Do not use cleaning products with a high alcohol content.

If you clean fittings and accessories in the dishwasher, this may cause them to become deformed or discolour.
- Never clean fittings and accessory in the dishwasher.

1. Prepare the appliance for cleaning. →*Page 16*
2. Clean the appliance, the fittings, the accessories, the removable parts and the door seals with a dish cloth, lukewarm water and a little pH-neutral detergent.
3. Dry thoroughly with a soft, dry cloth.
4. Insert the fittings and install the removable appliance parts.
5. Electrically connect the appliance. →*Page 9*
6. Switch on the appliance. →*Page 13*
7. Putting the food into the appliance.

13.3 Removing the fittings

If you want to clean the fittings thoroughly, remove these from your appliance.

Removing the shelf

- Pull out and remove the shelf.

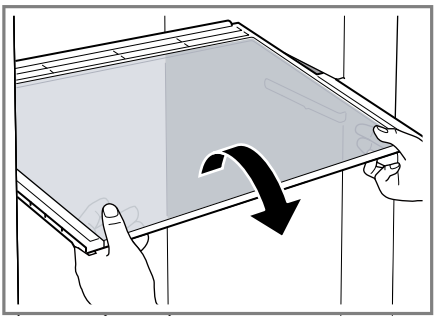

Removing the extendable shelf

1. Firmly pull out the extendable shelf until the locking catch is released.

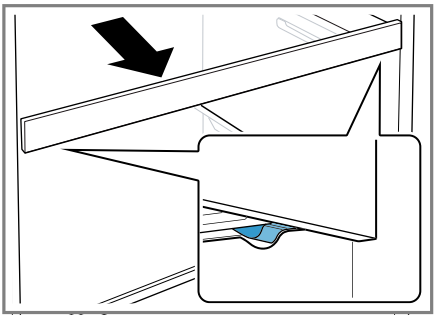

2. Lower the extendable shelf and swing it out to the side.

Removing door tray

- Lift the door tray and remove it.

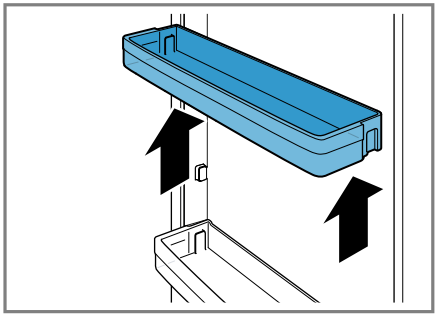

Removing the fruit and vegetable container

- Tilt the fruit and vegetable container forwards ① and remove it ②.

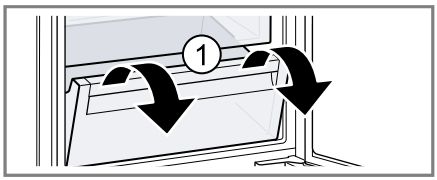

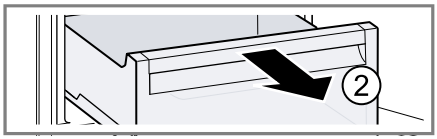

Removing the cool-fresh container

- Tilt the cool-fresh container forwards ① and remove it ②.

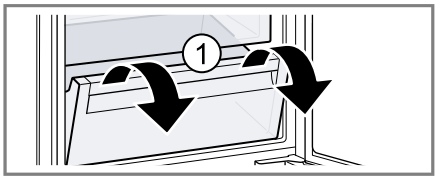

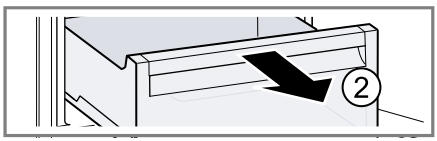

13.4 Removing appliance components

If you want to clean your appliance thoroughly, you can remove certain components from your appliance.

Partition and cover of the fruit and vegetable container

You can remove the partition and the cover of the fruit and vegetable container in order to clean it thoroughly.

Removing the partition

1. Remove the glass plate from the partition.

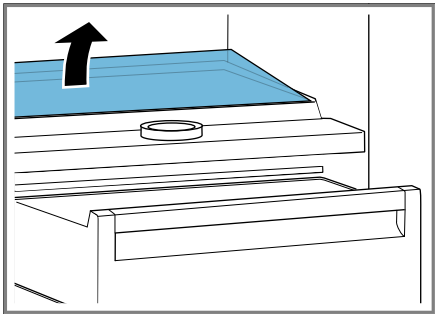

2. Remove the fruit and vegetable container.
3. Press the lever on the underside on both sides ① and pull the partition forwards ②.

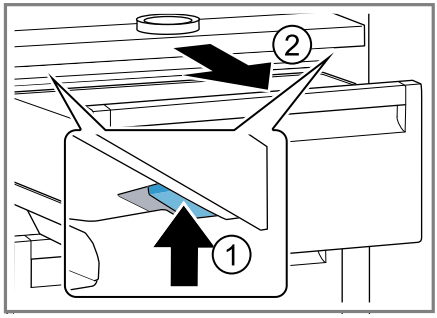

4. Lift the partition and swivel it out to the side.

Removing the cover

- Lift the cover of the fruit and vegetable container, pull it forwards and swivel it out to the side.

Fitting the partition and cover

1. Insert the cover for the fruit and vegetable container.
2. Insert the partition.

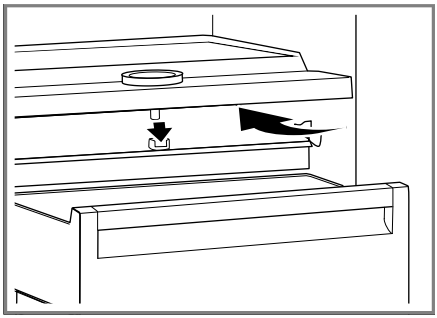

3. Place the glass plate on the partition.

Telescopic rails

You can remove the telescopic rails in order to clean them thoroughly.

Removing telescopic rails

1. Pull out the telescopic rail.

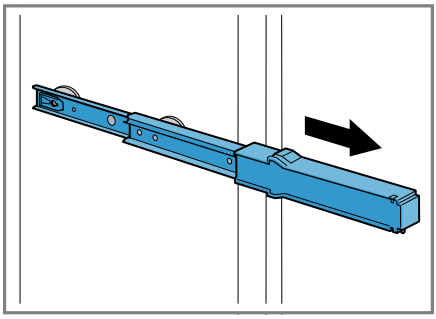

2. Move the lock in the direction of the arrow ① and loosen the pin from the rear ②.

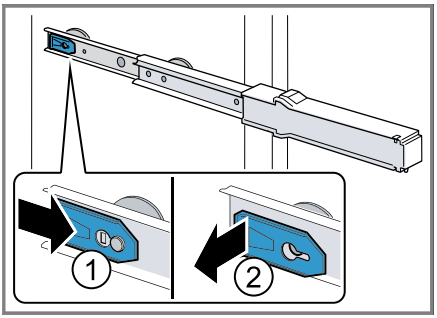

3. Push in the telescopic rail.
4. Push the telescopic rail backwards above the rear pin ① and disengage ②.

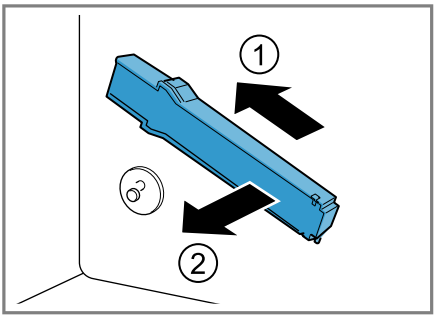

Installing telescopic rails

1. Place the extended telescopic rail on the front pin ① and pull it forwards slightly to lock in place ②.

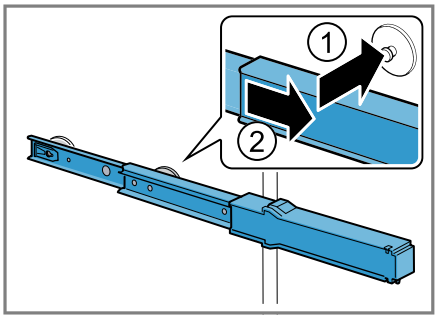

2. Place the telescopic rail on the rear pin ① and push the locking mechanism back ②.

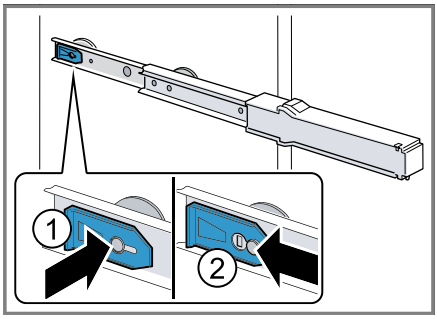

14 Troubleshooting

You can rectify minor faults on your appliance yourself. Read the troubleshooting information before contacting after-sales service. This will avoid unnecessary costs.

⚠ **WARNING**
Risk of electric shock!
Improper repairs are dangerous.

- Repairs to the appliance should only be carried out by trained specialist staff.
- Only use genuine spare parts when repairing the appliance.
- If the power cord of this appliance is damaged, it must be replaced by the manufacturer, the manufacturer's Customer Service or a similarly qualified person in order to prevent any risk.

Fault	Cause and troubleshooting
The appliance is not cooling, the displays and lighting are lit.	Showroom mode is switched on. ▸ Carry out the appliance self-test. →*Page 21* ✔ Once the appliance self-test has ended, the appliance switches to normal operation.
The LED lighting does not work.	Different causes are possible. ▸ Call customer service. The customer service number can be found in the enclosed customer service directory.
The refrigeration unit is switching on more frequently and for longer.	The appliance has been opened frequently. ▸ Do not open appliance door unnecessarily.
	External ventilation openings are covered up. ▸ Remove any obstructions from in front of the external ventilation openings.
	Not a fault. Modern refrigeration machines switch on more frequently and have different power levels to cool more efficiently.  ▸ Remove any obstructions from in front of the external ventilation openings. ▸ Install the appliance as far away as possible from heating elements, cookers and other heat sources. Avoid prolonged exposure of the appliance to direct sunlight. ▸ Only open the appliance door as briefly as necessary. ▸ Allow hot food and drinks to cool down first before storing in the appliance.
"E" or "d" appears on the temperature display.	The electronics have detected a fault. **1.** Switch off the appliance. →*Page 13* **2.** Disconnect the appliance from the mains. Unplug the appliance from the mains or switch off the circuit breaker in the fuse box. **3.** Reconnect the appliance after five minutes. **4.** If the message still appears on the display, call Customer Service. The customer service number can be found in the enclosed customer service directory.
A warning signal sounds and "alarm" lights up.	Different causes are possible. ▸ Press **alarm**. ✔ The alarm is switched off.

Fault	Cause and troubleshooting
A warning signal sounds and "alarm" lights up.	The appliance door is open. ▸ Close the appliance door.
The temperature differs greatly from the setting.	Different causes are possible. **1.** Switch off the appliance. →*Page 13* **2.** Switch the appliance back on after five minutes. →*Page 13* ▸ If the temperature is too warm, check the temperature again after a couple of hours. ▸ If the temperature is too cold, check the temperature again on the following day.
The appliance hums, bubbles, buzzes, gargles or clicks.	Not a fault. A motor is running, e.g. refrigerating unit, fan. Refrigerant flows through the pipes. The motor, switches or solenoid valves are switching on or off. No action required.
The appliance makes noises.	Fittings wobble or stick. ▸ Check the removable fittings and, if required, replace these.
	Bottles or containers are touching. ▸ Move the bottles or containers away from each other.

14.1 Conducting an appliance self-test

Your appliance has an appliance self-test which displays faults that can be eliminated by your customer service.

1. Switch off the appliance. →*Page 13*
2. Switch the appliance back on after approx. five minutes. →*Page 13*
3. Within the first 10 seconds after switching on, press and hold **super** 3 to 5 seconds.

✔ The appliance self-test starts.
✔ While the appliance self-test is running, a long audible signal sounds.
✔ If, at the end of the appliance self-test, 2 audible signals sound and the temperature display indicates the set temperature, the temperature sensors on your appliance are OK. The appliance switches to normal operation.
✔ If, at the end of the appliance self-test, 5 audible signals sound and "super" flashes for 10 seconds, inform customer service.

15 Storage and disposal

15.1 Taking the appliance out of operation

1. Switch off the appliance. →*Page 13*
2. Disconnect the appliance from the power supply.
Unplug the appliance from the mains or switch off the circuit breaker in the fuse box.
3. Remove all of the food.
4. Defrost the appliance. →*Page 15*
5. Clean the appliance. →*Page 16*

6. To guarantee the ventilation inside the appliance, leave the appliance open.

15.2 Disposing of old appliance

Valuable raw materials can be reused by recycling.

⚠ WARNING
Risk of harm to health!
Children can lock themselves in the appliance, thereby putting their lives at risk.
- ▸ Leave shelves and containers inside the appliance to prevent children from climbing in.
- ▸ Keep children away from the redundant appliance.

⚠ WARNING
Risk of fire!
If the tubes are damaged, flammable refrigerant and harmful gases may escape and ignite.
- ▸ Do not damage the tubes of the refrigerant circuit or the insulation.

1. Unplug the appliance from the mains.
2. Cut through the power cord.
3. Dispose of the appliance in an environmentally friendly manner. Information about current disposal methods are available from your specialist dealer or local authority.



This appliance is labelled in accordance with European Directive 2012/19/EU concerning used electrical and electronic appliances (waste electrical and electronic equipment - WEEE). The guideline determines the framework for the return and recycling of used appliances as applicable throughout the EU.

16 Customer Service

Function-relevant genuine spare parts according to the corresponding Ecodesign Order can be obtained from Customer Service for a period of at least 10 years from the date on which your appliance was placed on the market within the European Economic Area.

Note: Under the terms of the manufacturer's warranty applicable to the location, the use of Customer Service is free of charge. The minimum duration of the warranty (manufacturer's warranty for private consumers) in the European Economic Area is 2 years according to the terms of warranty applicable to the location. The terms of warranty do not affect other rights or claims held by yourself under local legislation.

Detailed information about the warranty period and the warranty conditions in your country is available via the QR code on the enclosed document on service contacts and warranty conditions, from our customer service or on our website.
If you contact Customer Service, you will require the product number (E-Nr.) and the production number (FD) of your appliance.
You can find the contact details for our customer service via the QR code on the enclosed document on service contacts and warranty conditions or on our website.

16.1 Product number (E-Nr.) and production number (FD)

You can find the product number (E-Nr.) and the production number (FD) on the appliance's rating plate.
→ *"Appliance", Fig.* **1** / 7 *Page 11*
Make a note of your appliance's details and the Customer Service telephone number to find them again quickly.

17 Technical data

Refrigerant, cubic capacity and further technical specifications can be found on the rating plate.
→ *"Appliance", Fig.* **1** / 7 *Page 11*

This product contains a light source from energy efficiency class F. The light source is available as a spare part and should only be replaced by trained specialist staff.
You can find more information about your model online at *https://eprel.ec.europa.eu/*[1]. This web address is linked to the official EU EPREL product database. Please then follow the instructions on searching for the model. The model identifier is made up of the characters before the slash in the product number (E-Nr.) on the rating plate. Alternatively, you can also find the model identifier in the first line of the EU energy label.

[1] Only applies to countries in the European Economic Area

EN Manufactured by BSH Hausgeräte GmbH under the trademark licence of Siemens AG

Valid within Great Britain:
Imported to Great Britain by
BSH Home Appliances Ltd.
Grand Union House
Old Wolverton Road
Wolverton, Milton Keynes
MK12 5PT
United Kingdom

BSH Hausgeräte GmbH
Carl-Wery-Straße 34
81739 München, GERMANY
siemens-home.bsh-group.com

9001795875 (050526)
en