Gaggenau

en User manual

RW414364
RW414304
RW466364
RW466304
RW466564

Wine storage compartment

en Table of contents

Safety instructions 3
About these instructions 3
Explosion hazard 3
Risk of electric shock 3
Danger due to refrigerants 3
Avoiding placing children and vulnerable people at risk 4
Damage 4
Weight 4

Intended use 5

Environmental protection 5
Packaging 5
Old appliances 5

Installation and connection 6
Contents of package 6
Technical specifications 6
Installing the appliance 6
Built-in cut-out 6
Side-by-side installation 6
Tips for saving energy 7
Before using your appliance for the first time 8
Electrical connection 8

Getting to know your appliance 8
Appliance 8
Controls 9
Interior fittings 9

Operating the appliance 10
Switching on the appliance 10
Switching off and disconnecting the appliance 10
Setting the temperature 10
Display light 10
Humidity 10
Display lock for cleaning 11
Self-test 11
Setting the brightness of the control panel 11
Switching standby screen on and off 11
Setting up the display screen 11
Setting the touch field colour 11
Setting the touch field tone type 12
Setting the touch field tone volume 12
Setting the signal tone volume 12
Dimming when door is opened and closed 12
Setting the temperature unit 12
Setting the language 12
Resetting to factory settings 13
Switching demo mode on or off 13
Rest mode 13
Automatic door opening 14
Home Connect 14
Automatic display lock for cleaning 14

Alarm 14
Door alarm 14

Home Connect 15
Home Connect setup 15
Connecting the refrigerator to the Home Connect app 16
Installing updates for the Home Connect software 16
Customer Service access 17
Delete network settings 17
Information on data protection 17
Declaration of conformity 17

Wine storage compartment 17
Loading bottles 17
Tips for storing wine 19
Drinking temperatures 19

Cleaning 20
Cleaning the display 20
Cleaning the appliance interior 20
Cleaning the equipment 20
Care instructions for stainless steel surfaces 20

Noise 20
Normal noises 20
Preventing noises 20

Lighting 20

Faults – what to do? 21
Appliance 21

Customer service 22
Appliance self-test 22
Repair order and advice on faults 22

⚠ Safety instructions

This appliance complies with the relevant safety regulations for electrical appliances and is fitted with noise suppression.

The refrigeration circuit has been checked for leaks.

About these instructions

- Read and follow the operating and installation instructions. They contain important information on how to install, use and maintain the appliance.
- The manufacturer is not liable if you disregard the instructions and warnings in the operating and installation instructions.
- Retain all documents for subsequent use or for the next owner.

Explosion hazard

- Never use electric devices inside the appliance (e.g. heaters or electric ice makers).
- Do not store products which contain flammable propellants (e.g. spray cans) or explosive substances in the appliance.

Risk of electric shock

Improper installations and repairs may put the user at considerable risk.

- If the mains cable is damaged: Immediately disconnect appliance from the electricity supply.
- Do not use multiple sockets, extension leads or adapters.
- Have the appliance repaired by the manufacturer, Customer Service or a similarly qualified person only.
- Use original parts supplied by the manufacturer only.

  The manufacturer guarantees that these parts satisfy the safety requirements.

Danger due to refrigerants

The tubes of the refrigeration circuit convey a small quantity of an environmentally friendly but flammable refrigerant (R600a). It does not damage the ozone layer and does not increase the greenhouse effect. If refrigerant escapes, it may injure your eyes or ignite.

- Do not damage the tubes.

If the tubes are damaged:

- Keep naked flames and ignition sources away from the appliance.
- Ventilate the room.
- Switch off the appliance and pull out the mains plug.
- Call the after-sales service.

Avoiding placing children and vulnerable people at risk

At risk are:

- Children,
- People who have limited physical, mental or sensory abilities,
- People who have inadequate knowledge concerning safe operation of the appliance.

Measures:

- Ensure that children and vulnerable people have understood the hazards.
- Children or vulnerable people must be supervised by a responsible person when using the appliance.
- Only children from 8 years and above may use the appliance.
- Supervise children while the appliance is being cleaned or maintained.
- Never allow children to play with the appliance.

Risk of suffocation

- If the appliance features a lock: keep the key out of the reach of children.
- Keep children away from the packaging and its parts.

Damage

To prevent damage:

- Do not stand or support yourself on the base, runners or doors.
- Keep plastic parts and door seals free of oil and grease.
- Pull the mains plug – not the power cord.

Weight

The appliance is very heavy. The appliance should always be transported and set up by at least 2 persons.

→ *"Installation and connection" on page 6*

Intended use

Use this appliance

- only for storing wine.
- only in the home and in the home environment.
- only according to these operating instructions.

This appliance is intended for use up to a maximum height of 2000 metres above sea level.

Environmental protection

Packaging

All materials are environmentally safe and recyclable:

- Dispose of packaging in an environmentally friendly manner.
- Please ask your dealer or inquire at your local authority about current means of disposal.

Old appliances

Valuable raw materials can be reclaimed by recycling old appliances.

⚠ Warning – Children may become locked in the appliance and suffocate!

- To prevent children from climbing in, leave shelves and containers in the appliance.
- Keep children away from the redundant appliance.

Caution!
Refrigerant and harmful gases may escape.

Do not damage the tubes of the refrigerant circuit and insulation.

1 Remove the mains plug.

2 Sever the power cord.

3 Have the appliance disposed of professionally.



This appliance is labelled in accordance with European Directive 2012/19/EU concerning used electrical and electronic appliances (waste electrical and electronic equipment - WEEE). The guideline determines the framework for the return and recycling of used appliances as applicable throughout the EU.

Installation and connection

Contents of package

After unpacking all parts, check for any damage in transit.

If you have any complaints, contact the dealer from whom you purchased the appliance or our after-sales service.
⟶ *"Customer service" on page 22*

The delivery consists of the following parts:

- Built-in appliance
- Interior fittings (depending on model)
- Installation material
- User manual
- Installation instructions
- Customer service booklet
- Warranty enclosure
- Information on the energy consumption and noises

Technical specifications

Refrigerant, cubic capacity and further technical specifications can be found on the rating plate.
⟶ *"Getting to know your appliance" on page 8*

Installing the appliance

Installation location

The more refrigerant an appliance contains, the larger the room must be in which the appliance is situated. Leaking refrigerant can form a flammable gas-air mixture in rooms which are too small.

The room must be at least 1 m³ per 8 g of refrigerant. The amount of refrigerant in your appliance is indicated on the rating plate inside the appliance.
⟶ *"Getting to know your appliance" on page 8*

The weight of the appliance may be up to 500 kg depending on the model. The base must be sufficiently stable and should not give. If necessary, reinforce the floor.

Permitted room temperature

The permitted room temperature depends on the climatic class of the appliance.

Information on the climatic class can be found on the rating plate.
⟶ *"Getting to know your appliance" on page 8*

Climatic category	Permitted room temperature
SN	+10 °C ... 32 °C
N	+16 °C ... 32 °C
ST	+16 °C ... 38 °C
T	+16 °C ... 43 °C

The appliance is fully functional within the permitted room temperature.

If an appliance of climatic class SN is operated at colder room temperatures, the appliance will not be damaged up to a room temperature of +5 °C.

Built-in cut-out

The cut-out must fulfil these criteria:

- Anti-tilt bracket must be fitted
- Cut-out depth min. 610 mm, for flush installation 635 mm
- rectangular
- stable – the side panels and the top must be min. 16 mm thick and securely attached to the bottom or wall
- Depth of shortest side panels min.100 mm

Side-by-side installation

Observe the specifications in the installation instructions for a side-by-side installation.

If a partition wall is required between the appliances, it must be at least 16 mm wide.

Tips for saving energy

If you follow the instructions below, your appliance will use less power.

Note: The arrangement of the features does not affect the energy consumption of the appliance.

Installing the appliance	
Keep the appliance out of direct sunlight.	The appliance needs to cool less frequently at low ambient temperatures and therefore consumes less power.
Install the appliance as far away as possible from heating elements, cooker and other heat sources: At least 1¼" (3 cm) from electric or gas cookers. At least 11¾" (30 cm) from oil or solid-fuel cookers. **Note:** If this is not possible, attach an insulating plate between the appliance and heat source.	
Select an installation location with a room temperature of approx. 20 °C.	
Do not cover or block the ventilation openings.	If the warm air can escape, the appliance needs to cool less frequently and therefore consumes less power.
Ventilate the room daily.	
Using the appliance	
Open the appliance door only briefly.	The air in the appliance does not warm up so intensely. The appliance must cool less frequently and therefore consumes less power.
Transport cooled wine in a cool bag and place in the appliance quickly.	
Always leave a space between the bottles and the back wall.	The air can circulate, and the temperature will remain constant. The appliance must cool less frequently and therefore consumes less power.
Do not cover or block the ventilation openings.	The appliance consumes less power if the warm air can escape freely.
Vacuum the ventilation openings once a year.	

Before using your appliance for the first time

1 Remove information material, adhesive tape and protective film.

2 Clean the appliance.

Electrical connection

Caution!

Do not connect the appliance to electronic energy saver plugs.

Note: You can connect the appliance to mains-controlled and sine-controlled inverters.
Mains-controlled inverters are used for photovoltaic systems which are connected directly to the national grid. Sine-controlled inverters must be used for isolated applications. Isolated applications, e.g. on ships or in mountain lodges, which are not connected directly to the national grid.

1 After installing the appliance, wait at least 1 hour before connecting it to prevent damaging the compressor.

2 Connect the appliance via a correctly installed socket.
The socket must comply with the following data:

Socket with	220 V ... 240 V
Conductor	50 Hz
Fuse	10 A ... 16 A

Outside Europe: Check whether the indicated current type of the appliance corresponds with the values of your power supply. Appliance specifications are on the rating plate.
→ *"Getting to know your appliance" on page 8*

3 Connect the appliance to a socket near the appliance.
The socket must also be freely accessible following installation of the appliance.

⚠ **Warning – Risk of electric shock!**
If the length of the mains cable is inadequate, never use multiple sockets or extension leads.Instead, please contact Customer Service for alternatives.

Getting to know your appliance

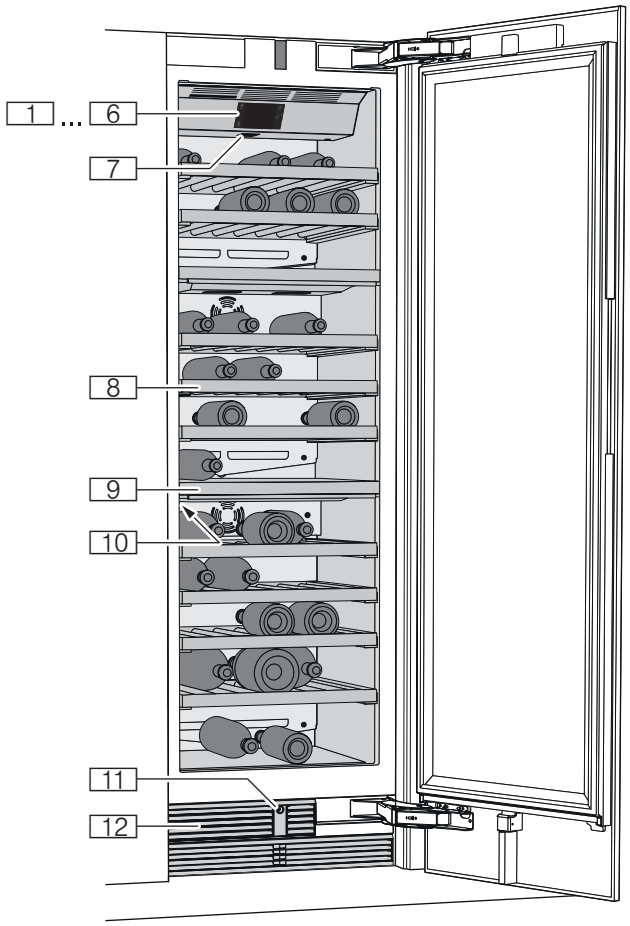

Appliance

* Not all models.

1 ... 6	Controls
7	Main switch on/off
8	Shelf
9	Partition
10	Rating plate
11	Automatic door opening
12	Ventilation opening

Controls

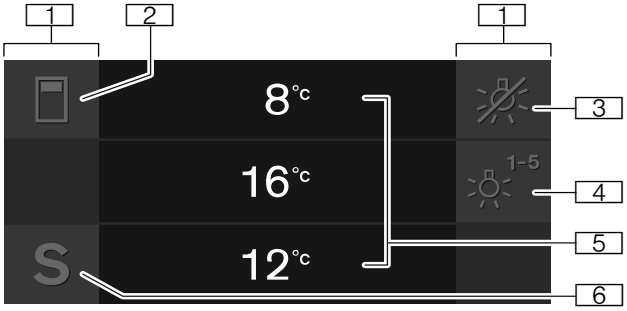

1 Touch fields
There are sensors under the touch fields. Touching the symbol calls up the respective function.

2 button
Opens the menu for changing the temperature and humidity.

3 button
Switches the display light off.

4 button
Opens the menu for switching between the different light scenarios.

5 Wine storage compartment temperature display
Indicates the set temperature in °C/°F.Depending on the appliance model in question, 2 or 3 compartments are displayed.

6 **S** button
Opens main menu.

Main menu

Press **S** button to open the main menu.

In the main menu you can find:

- Basic settings
- Display lock for cleaning
- Self-test
- Rest mode (when active)

→ *"Operating the appliance" on page 10*

Basic settings menu

To access the **Basic settings** menu:

1 Press **S** button.

2 Press ❮ button to move to the menu item **Basic settings**.

3 Open menu using ❯ button.

In the **Basic settings** menu you will find the following sub-menus and setting options:

- Brightness
- Standby screen
- Display screen
- Touch field colour
- Touch field tone type
- Touch field tone volume
- Signal tone volume
- Dimming when door is opened and closed
- Temperature unit
- Language
- Factory settings
- Demo mode
- Rest mode
- Automatic door opening
- Home network
- Automatic display lock for cleaning

→ *"Operating the appliance" on page 10*

Interior fittings

Shelf

You can pull out the shelves to reach wine bottles more easily.

Note: The shelves separating the climate zones are not movable.

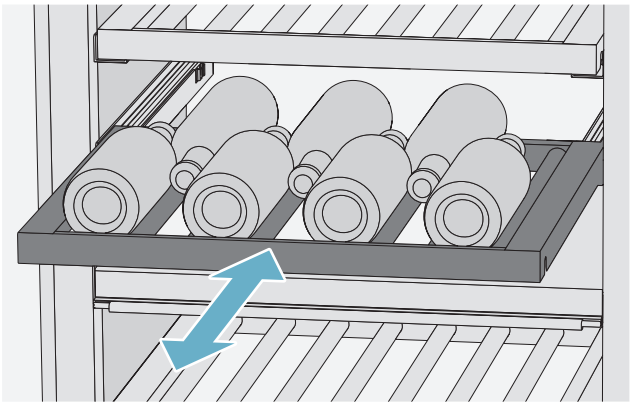

Operating the appliance

Switching on the appliance

1 Press the **main On/Off switch**.
The appliance starts cooling and the light is switched on when the door is open.

2 Set the required temperature.
⟶ *"Setting the temperature" on page 10*

Operating tips

- After the appliance has been switched on, it may take several hours until the set temperatures are reached.
- The sides of the housing are partly heated slightly. This prevents condensation in the area of the door seal.

Switching off and disconnecting the appliance

Switch off the appliance

- Press the **main On/Off switch**.

  The appliance no longer cools.

Shutting down the appliance

If you do not use the appliance for a prolonged period:

1 Pull out the mains plug or switch off the fuse.
The appliance no longer cools.

2 Clean the appliance.

3 Leave the appliance open.

Setting the temperature

Recommended temperature

Wine storage compartment: 11 °C

Wine storage compartment

1 Use button to select the desired compartment.

2 Keep pressing **+**/**−** button until the display indicates the desired temperature.

3 The appliance stores the setting and automatically returns to the main screen after a few seconds.

Display light

You can use the preprogrammed light modes to illuminate your wine bottles when the door is closed. The individual climate zones have different illumination levels.

Using the display light

1 Press button to open the **Display light** menu.

2 Select a light mode or press button to switch the display light off.

3 Press button.
The setting is saved.

Switching off display light

- To switch the display light off, press button.

Note: This also hides the button for opening the **Display light** menu.Press the button again to unhide the button.

Humidity

If bottles with natural corks are stored for longer than 4 weeks, the corks may shrink if the humidity is too low.

To prevent this from happening, store old wine bottles so that the cork is kept damp and increase the humidity level.

Switching humidity on and off:

1 Use button to select the desired compartment.

2 To switch on the higher humidity level, press button.
The symbol appears in the display.
To switch off, press button.
The symbol appears in the display.

3 The appliance stores the setting and automatically returns to the main screen after a few seconds.

Display lock for cleaning

You can use this function to switch off the touch function of the controls for 10 seconds. During this time you can clean the display.
⟶ *"Cleaning the display" on page 20*

1 Press **S** button to open the main menu.
2 Press ▶ button.

The cleaning display appears and the countdown starts.

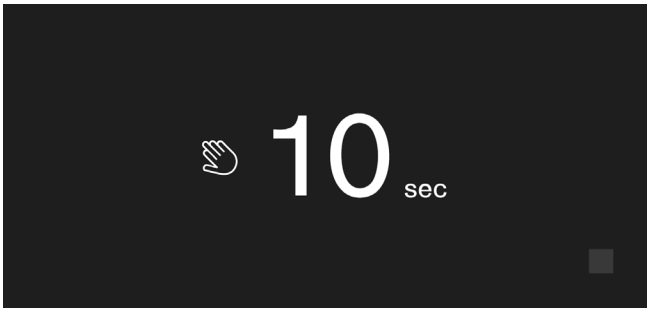

Self-test

This function can be used to start fault analysis on your appliance.
⟶ *"Appliance self-test" on page 22*

Setting the brightness of the control panel

1 Press **S** button to open the main menu.
2 Press ❮ button to move to the **Basic settings** menu item.
3 Press ❯ button.
4 Press _ button to open the **Brightness** menu item.
5 Press ❮ ❯ buttons to set the required brightness.
6 Press ❯ button.
The setting is saved.
7 Press **X** button to exit the menu.

Switching standby screen on and off

If you switch on the standby screen, you can select what is displayed on the control panel when the door is closed.

1 Press **S** button to open the main menu.
2 Press ❮ button to move to the menu item **Basic settings**.
3 Press ❯ button.
4 Use ❯ button to move to the menu item **Standby screen**.
5 Press _ button.
6 Use ❮ ❯ buttons to select whether the Standby screen is switched on or off.
7 Press ❯ button.
8 When the Standby screen has been switched on, you can use ❮ ❯ buttons to select whether the logo or the temperature is displayed with the functions switched on.
9 Press ❯ button.
The setting is saved.
10 Press **X** button to exit the menu.

Setting up the display screen

You can choose between the settings **Reduced** and **Standard**. With the setting **Reduced** only the temperature and active special functions are displayed on the control panel after a short period without operation. If the touch fields are touched, all buttons will be visible again.
With the setting **Standard** all buttons always remain visible.

1 Press **S** button to open the main menu.
2 Press ❮ button to move to the menu item **Basic settings**.
3 Press ❯ button.
4 Use ❯ button to move to the menu item **Display screen**.
5 Press _ button.
6 Use ❮ ❯ buttons to move to the required setting.
7 Press ❯ button.
The setting is saved.
8 Press **X** button to exit the menu.

Setting the touch field colour

1 Press **S** button to open the main menu.
2 Press ❮ button to move to the **Basic settings** menu item.
3 Press ❯ button.
4 Press ❯ button to move to the **Touch field colour** menu item.
5 Press _ button.
6 Press ❮ ❯ buttons to move to the required setting.
7 Press ❯ button.
The setting is saved.
8 Press **X** button to exit the menu.

Setting the touch field tone type

You can change or switch off the sound of the tones generated when pressing buttons.

1 Press **S** button to open the main menu.
2 Press ❮ button to move to the **Basic settings** menu item.
3 Press ✓ button to open the menu item.
4 Press ❯ button to move to the **Touch field tone type** menu item.
5 Press _ button to open the menu item.
6 Press ❮ ❯ buttons to select the required setting.
7 Press ✓ button.
The setting is saved.
8 Press **X** button to exit the menu.

Setting the touch field tone volume

You can adjust the volume level of the sounds generated when pressing buttons.

1 Press **S** button to open the main menu.
2 Press ❮ button to move to the **Basic settings** menu item.
3 Press ✓ button to open the menu item.
4 Press ❯ button to move to the **Touch field tone volume** menu item.
5 Press _ button to open the menu item.
6 Press ❮ ❯ buttons to select the required setting.
7 Press ✓ button.
The setting is saved.
8 Press **X** button to exit the menu.

Setting the signal tone volume

You can adjust the volume level of the signal tones generated e.g. with alarms.

1 Press **S** button to open the main menu.
2 Press ❮ button to move to the **Basic settings** menu item.
3 Press ✓ button to open the menu item.
4 Press ❯ button to move to the **Signal tone volume** menu item.
5 Press _ button to open the menu item.
6 Press ❮ ❯ buttons to select the required setting.
7 Press ✓ button.
The setting is saved.
8 Press **X** button to exit the menu.

Dimming when door is opened and closed

If dimming is switched on, the light will slowly become brighter when the door is opened, and then slowly darker when it is closed.

Switching dimming on or off when opening and closing the door

1 Press **S** button to open the main menu.
2 Press ❮ button to move to the menu item **Basic settings**.
3 Press ✓ button.
4 Press ❯ button to move to the menu item **Dimming when opening and closing the door**.
5 Press _ button.
6 Press ❯ button to move to the menu item **On** or **Off**.Press ✓ button to confirm.

Setting the temperature unit

You can choose between the unit °C and °F.

1 Press **S** button to open the main menu.
2 Press ❮ button to move to the **Basic settings** menu item.
3 Press ✓ button.
4 Press ❮ button to move to the **Temperature unit** menu item.
5 Press _ button.
6 Press ❮ ❯ buttons to move to the required unit.
7 Press ✓ button.
The unit will be changed.
8 Press **X** button to exit the menu.

Setting the language

1 Press **S** button to open the main menu.
2 Press ❮ button to move to the menu item **Basic settings**.
3 Press ✓ button.
4 Press ❮ button to move to the menu item **Language**.
5 Press _ button.
6 Press ❮ ❯ buttons to move to the required language.
7 Press ✓ button.
The display restarts, and the start screen is displayed.

Resetting to factory settings

1 Press **S** button to open the main menu.
2 Press ❮ button to move to the **Basic settings** menu item.
3 Press ❯ button.
4 Press ❮ button to move to the **Factory settings** menu item.
5 Press ⏎ button.
A signal tone sounds and a message to confirm reset appears.
6 Press ❯ button.
All settings are reset to the factory settings.
7 Press **X** button to exit the menu.

Switching demo mode on or off

The cooling function of the appliance is switched off. All other functions can be used.

Note: Do not store any food in demo mode as the appliance remains at room temperature.

1 Press **S** button to open the main menu.
2 Press ❮ button to move to the menu item **Basic settings**.
3 Press ❯ button.
4 Press ❮ button to move to the menu item **Demo mode**.
5 Press ⏎ button.
6 Press ❮ ❯ buttons to select the setting **On** or **Off**.
7 Press ❯ button.
The setting is saved.
8 Press **X** button to exit the menu.

Rest mode

The appliance switches off the following:

- Automatic door opening

  Note: With handle-free installation, please note that you will not be supported when opening the door during this time.
  To open the door in this case, reach from below under the bottom panel of the unit.
- Audible signals
- Interior lighting
- Messages on the control panel
- Background illumination of control panel is reduced

Switching rest mode on or off

Displaying or hiding rest mode in the main menu

To use rest mode, you first have to display the function in the main menu:

1 Press **S** button to open the main menu.
2 Press ❮ button to move to the menu item **Basic settings**.
3 Press ❯ button.
4 Press ❮ button to move to the menu item **Rest mode**.Press ⏎ button.
5 Press ❯ buttons to move to the menu item **Available** or **Not available**.Press ❯ button to confirm.

The function is displayed or hidden in the main menu.

Switching rest mode on

1 Press **S** button to open the main menu.
2 Press ⏲ button to open the view **Rest mode duration**.
3 Use **+**/**−** buttons to change the duration.
4 Press ▶ button to start.
The appliance switches all listed functions off.

Switching rest mode off

- After the selected time elapses, the appliance switches to normal operation.
- To end rest mode before expiry of the selected time, press ■ button.

Automatic door opening

The automatic door opening function supports you in opening the door.
As soon as you activate this function, automatic door opening moves out and supports you in opening the door.

Caution!

Repeatedly closing the door too early will cause automatic door opening to fail or wear out.
Do not close the door as long as automatic door opening is still moved out.
If you have nevertheless closed the door, leave it closed for 5 minutes. Automatic door opening will re-adjust itself.

Open the menu item Automatic door opening:

1 Press **S** button to open the main menu.
2 Use ❮ button to move to the **Basic settings** menu.
3 Press ❯ button to open the menu.
4 Use ❮ button to move to the menu item **Automatic door opening**.
5 To change the setting, press ⌄_ button.

Switching on Push-to-open system

In an installation situation without handles you can select the Push-to-open system. Your appliance will then open a crack if you press lightly on the door.

Note: Please note that automatic door opening is disabled if Rest mode is activated.

1 Open the menu item **Automatic door opening**.
2 Select menu item **Push-to-open system**.
3 Press ❯ button to open the menu item.
4 Select **Opening force**.Here you can select the level of force required to activate automatic door opening.
5 Select **Opening duration**.Here you can select how long the door should remain open a crack before it closes again automatically.

   Note: If the door remains open a crack, the appliance checks once a second whether the door is still ajar.After the selected opening duration elapses, the appliance will close the door automatically.

Switching on Pull-to-open system

In an installation situation with handles you can select the Pull-to-open system. Your appliance will support you in opening the door as soon as you pull on the handle.

1 Open the menu item **Automatic door opening**.
2 Select menu item **Pull-to-open system**.
3 Press ❯ button to open the menu item.
4 Select **Opening force**.Here you can select the level of force required to activate automatic door opening.

Switching off automatic door opening

1 Open the menu item **Automatic door opening**.
2 Select menu item **Off**.

Home Connect

You can use this function to establish a connection between the refrigerator and your mobile device.
⟶ *"Home Connect" on page 15*

Automatic display lock for cleaning

You can use this function to select whether the clean lock is switched on automatically when the door is opened.

1 Press **S** button to open the main menu.
2 Press ❮ button to move to the **Basic settings** menu item.
3 Press ❯ button.
4 Use ❮ button to move to the **Automatic display lock for cleaning** menu item.
5 To change the setting, press ⌄_ button.

Alarm

Door alarm

If the appliance door is open for a longer time, the door alarm (continuous audible signal) switches on.

- Close the appliance door.
  The audible warning signal is switched off.

Home Connect

This appliance is Wi-Fi-capable and can be remotely controlled using a mobile device.

Note: Wi-Fi is a registered trade mark of the Wi-Fi Alliance.

In the following cases, the appliance functions like a refrigerator without a network connection and can still be manually operated via the controls:

- The appliance is not connected to a home network.
- Home Connect service is not available in the country in which the appliance is set up. For an overview of the countries in which Home Connect is available, see www.home-connect.com.

Note: Please observe the safety information in this instruction manual. Ensure that this is also adhered to if you operate the appliance via the Home Connect app and are not at home when doing so.
⟶ *"Safety instructions" on page 3*
Follow the instructions in the Home Connect app as well.

Home Connect setup

Notes

– Wait at least 2 minutes after switching on the appliance before setting up Home Connect. Only then is the internal appliance initialisation complete.
– Observe the Home Connect supplementary sheet, which is available for download under www.gaggenau.com with the instructions. Enter the E-number of your appliance in the search field.
– To change the settings of your appliance with Home Connect, you have to install the Home Connect app on your mobile device.
Please observe the supplied Home Connect documents for doing this.
Follow the steps specified by the app.

Home network menu

Here's how to open the **Home network** menu:

1 Press **S** button to open the main menu.
2 Press ❮ button to move to the **Basic settings** menu item.
3 Press ❯ button to open the menu item.
4 Press ❮ button to move to the **Home network** menu item.
5 Press ❯ button to open the menu item.
Note: The first time you open the menu, you will be automatically guided through the initial setup. Follow the instructions on the control panel. For further information, please also see the following chapters.
6 Press ❮ ❯ buttons to select the required submenu.
7 Press ✕ button to exit the menu.

The following submenus can be found in the **Home network** menu:

- Connection
- Connect to app
- Software update
- Delete network settings

Setting up the connection to the home network (WLAN)

The first time you open the menu, you will be automatically guided through the initial setup. Follow the instructions on the control panel.

1 Install the **Home Connect** app on your mobile device.
2 Open the **Home network** menu on your refrigerator.
3 Open the app on the mobile device.
4 Log in or register with the app if access is not yet available.
5 Check the router of your home network to see if a WPS function is available for automatic connection.
6 If this function is available, start the automatic network connection with ❯ button and follow the instructions on the control panel.
7 Start the manual network connection if this function is not available, if you're not sure whether the function is available, or if the automatic network connection fails.
The refrigerator temporarily generates its own network for connecting the mobile device.
8 Start the manual network connection in the app of the mobile device.

As soon as the refrigerator is connected to the mobile device, a connection between the refrigerator and the home network (WLAN) is established.

Note: If the connection cannot be established, check whether there is sufficient reception.
⟶ *"Verify signal strength" on page 16*

Verify signal strength

The signal strength is displayed in the start window of the **Home network** menu. The signal strength should be at least 50 %. If the signal strength is too low, the connection could be interrupted.

Improving the signal strength

- Place the router closer to the refrigerator.
- Ensure that the connection is not interfered with by screening walls.
- Install a repeater to make the signal stronger.

Connecting the refrigerator to the Home Connect app

Use this menu to connect your refrigerator to mobile devices.

1 Install the **Home Connect** app on your mobile device and log in or register.

2 Open the **Home network** menu on your refrigerator.
⟶ *"Home Connect setup" on page 15*

3 Press › button to move to the menu item **Connect to app**.

4 Press _ button to open the menu item.

5 Confirm the message to display the refrigerator in the app.

6 Open the app and wait until the refrigerator is displayed.
Use**Add** to confirm the connection between the app and the refrigerator.
If the refrigerator is not automatically displayed, click on **Add appliance** in the app and follow the instructions. As soon as your refrigerator is displayed, add it with **+**.

7 Follow the instructions in the app until the process is complete.

Installing updates for the Home Connect software

The refrigerator checks at regular intervals whether updates are available for the Home Connect software.

If an update is available, a **S** small exclamation mark appears on **S** button.

Installing the update:

1 Press **S** button.
The **Home network note** window opens.

2 Press ⌄ button to open the note.
The note contains the necessary steps for installing the new software.

3 Press ⌄ button to confirm the note.

4 Open the **Home network** menu on your refrigerator.
⟶ *"Home Connect setup" on page 15*

5 Press › button to move to the **Software update** menu item.

6 Press _ button to open the menu item.
Note: _ button is only visible if an update is available.
Installing new software.

7 A note appears when installation is complete.

8 Press ⌄ button to confirm the note.

Customer Service access

If you contact Customer Service, they can access your appliance and view its status after you have given your consent. You need to have your appliance connected to your home network for this.

Further information about Customer Service access and its availability in your country is available under www.home-connect.com in the Help & Support area.

1 Contact Customer Service.
⟶ *"Customer service" on page 22*

2 Confirm the start of Customer Service access in the app.
During Customer Service access the symbol appears on the control panel.

3 As soon as Customer Service has obtained the necessary data, they end access.

Note: You can interrupt remote diagnosis early by switching off Customer Service access in the Home Connect app.

Delete network settings

If there is a problem when trying to establish a connection, or if you would like to register the appliance in a different home network (WLAN), the Home Connect settings can be reset.

1 Open the **Home network** menu on your refrigerator.
⟶ *"Home Connect setup" on page 15*

2 Press › button to move to the **Delete network settings** menu item.

3 Press _ button to open the menu item.

4 Confirm the message to delete the network settings.

To reconnect the appliance to the home network, perform the initial setup again.
⟶ *"Setting up the connection to the home network (WLAN)" on page 15*

Information on data protection

The first time your Home Connect appliance is registered on the WLAN network connected to the Internet, your appliance will transmit the following types of data to the Home Connect server (initial registration):

- Unique appliance identification (consisting of appliance codes as well as the MAC address of the installed Wi-Fi communication module).
- Security certificate of the Wi-Fi communication module (to ensure a secure IT connection).
- The current software and hardware version of your domestic appliance.
- Status of any previous resetting to factory settings.

This initial registration prepares the Home Connect functions for use and is only required when you want to use these Home Connect functions for the first time.

Note: Be aware that the Home Connect functions can only be utilised with the Home Connect app. Information on data protection can be called up in the Home Connect app.

Declaration of conformity

Gaggenau Hausgeräte GmbH hereby declares that the appliance with Home Connect functionality meets the essential requirements and other relevant provisions of Directive 2014/53/EU.

A detailed RED Declaration of Conformity can be found online at www.gaggenau.com among the additional documents on the product page for your appliance.

CE

2.4 GHz band: 100 mW max.

Wine storage compartment

Loading bottles

To store the maximum number of wine bottles:

- store the bottles as indicated
- check that the bottles do not exceed the specified dimensions

Storage example

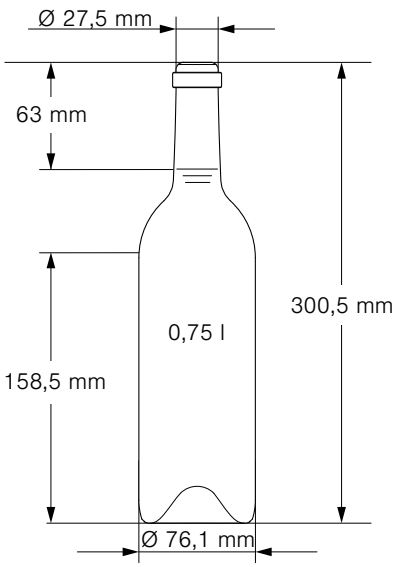

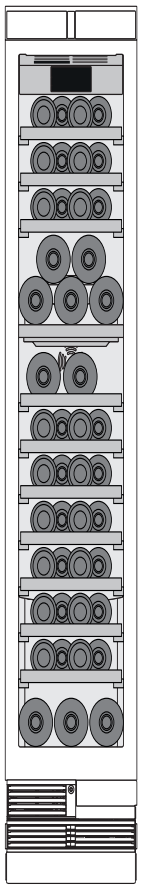

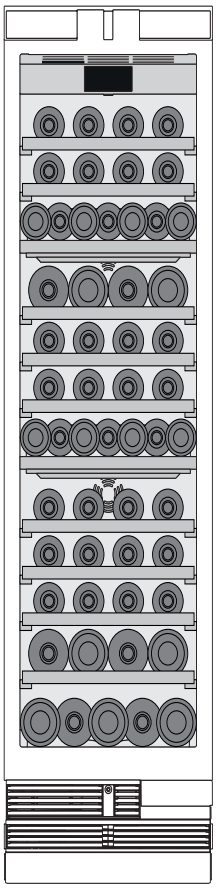

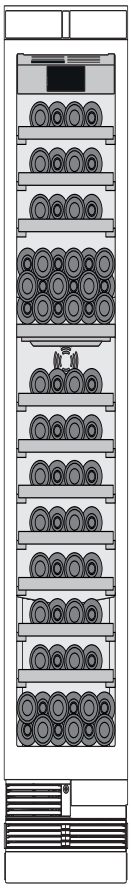

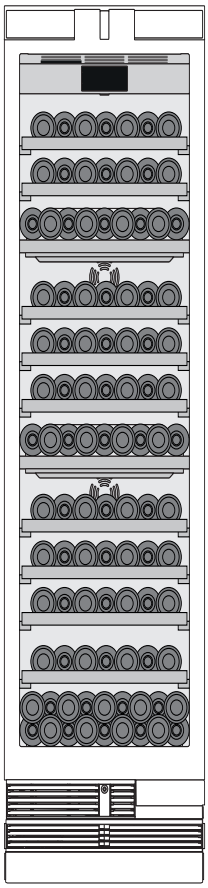

Tips for storing wine

- Unpack wine bottles – do not store in crates or cartons in the wine storage compartment.
- If bottles with natural corks are stored for longer than 4 weeks, the corks may shrink if the humidity is too low.
  To prevent this from happening, store old wine bottles so that the cork is kept damp and increase the humidity level.
  ⟶ *"Humidity" on page 10*
- The open bottle shelves allow continuous air circulation. As a result, excess humidity is quickly removed.
- Before drinking wine, it should be warmed up slowly (chambré). Take e.g. rosé out of the appliance approx. 2–5 hours before drinking and red wine 4–5 hours beforehand. This will ensure that the wine is at the correct drinking temperature. White wine on the other hand should be served just before drinking. Sparkling wine and champagne should be chilled in the refrigerator for a short while before drinking.
- Remember that wine should always be cooled slightly lower than the ideal serving temperature as its temperature increases as soon as it is poured into a glass.

Drinking temperatures

The correct serving temperature is crucial for the taste and therefore your enjoyment of wine.

We recommend the following drinking temperatures for serving wine:

Type of wine	Drinking temperature
Full-bodied red Bordeaux	18 °C
Côtes du Rhône red/Barolo	17 °C
Full-bodied red Burgundy/red Bordeaux	16 °C
Port wine	15 °C
Young red Burgundy	14 °C
Young red wines	12 °C
Young Beaujolais/all white wines with little residual sugar	11 °C
Old white wines/Chardonnay	10 °C
Sherry	9 °C
Young white wines, from late vintage onward	8 °C
Loire/Entre-deux-Mers white wines	7 °C

Cleaning

Caution!
To avoid damage to the appliance and fittings and to prevent affecting the taste of drinks:

- Do not use cleaning agents or solvents containing chlorine, fluorine, iodine, bromine or acids.
- Do not use cleaning agents or solvents containing sand or acids.
- Do not use scouring or abrasive sponges. Metallic surfaces may corrode.
- Never clean shelves or containers in the dishwasher. These parts may become deformed.

Cleaning the display

The change in temperature and humidity can cause the controls to steam up.

Switch the clean lock on before cleaning.
⟶ *"Display lock for cleaning" on page 11*

Use a clean microfibre cloth for cleaning.

Cleaning the appliance interior

Proceed as follows:

1. Pull out the mains plug or switch off the fuse.
2. Take out the bottles and store in a cool location if possible.
3. Clean the appliance with a soft cloth, lukewarm water and a little pH-neutral washing-up liquid.
   Caution!
   The rinsing water must not run into the light or through the drainage hole into the evaporation area.
4. Wipe the door seal with clean water and dry thoroughly with a cloth.
5. Reconnect the appliance and put the bottles back.

Cleaning the equipment

To clean, take the variable parts out of the appliance.
⟶ *"Interior fittings" on page 9*

Care instructions for stainless steel surfaces

When taking care of and cleaning stainless steel surfaces, use only cleaning agents suitable for stainless steel and a stainless steel cleaning cloth.

You can purchase a suitable stainless steel cleaning cloth from customer service.

To prevent visible scratches, clean the stainless steel surface in the direction of the structure.

Noises

Normal noises

Droning: A motor is running, e.g. refrigerating unit, fan.

Bubbling, buzzing or gurgling: Refrigerant is flowing through the tubes.

Clicking: Motor, switches or solenoid valves are switching on and off.

Preventing noises

Appliance is not level: Align appliance using a spirit level. Adjust the height of the feet.If the feet have already been moved right out, but the appliance is still not level, place e.g. a thin wooden plate underneath.

Containers, shelves or storage compartments wobble or stick: Check the removable fittings and re-insert if required.

Bottles or receptacles are touching each other: Move bottles or receptacles away from each other.

Lighting

Your appliance features a maintenance-free LED light.

Only customer service or authorised technicians may repair the light.

Faults – what to do?

Before you call customer service, use this table to check whether you can rectify the fault yourself.

Appliance

Temperature differs greatly from the set value.	
	Switch off appliance for 5 minutes. ⟶ *"Switching off and disconnecting the appliance" on page 10* If the temperature is too warm, check temperature again after a couple of hours. If the temperature is too cold, check temperature again on the following day.

Displays do not illuminate.	
The mains plug has not been inserted properly.	Connect the mains plug.
The fuse has tripped.	Check the fuses.
The power has failed.	Check whether the power is on.

The refrigeration unit is switching on more frequently and for longer.	
The appliance was opened frequently.	Do not open the appliance unnecessarily.
The ventilation openings are covered up.	Remove obstructions.
Large quantities of fresh food have been put in.	Switch on super cooling promptly in advance.

Appliance is not cooling, display and lighting are lit.	
Demo mode is switched on.	Switch demo mode off. ⟶ *"Switching demo mode on or off" on page 13*

The door does not open when pressed.	
A special mode has switched off automatic door opening.	To open the door, reach from below under the bottom panel of the unit or switch off special mode. ⟶ *"Switching rest mode on or off" on page 13*
Pull-to-open is switched on.	Switch the appliance to Push-to-open. ⟶ *"Automatic door opening" on page 14*
The opening force is set too high.	Select a lower setting for the opening force. ⟶ *"Automatic door opening" on page 14*
The fuse has tripped.	Check the fuses.
The power has failed.	Check whether the power is on.

Customer service

If you are unable to rectify the fault, please contact our customer service. We will always find an appropriate solution in order to avoid unnecessary visits by engineers.

The contact information for your nearest customer service can be found here or on the enclosed customer service list.

When calling, please state the product number (E-Nr.) and the production number (FD) which can be found on the rating plate.
⟶ *"Getting to know your appliance" on page 8*

Trust the expertise of the manufacturer. You can therefore be sure that the repair is carried out by trained service technicians who carry original spare parts for your domestic appliances.

Appliance self-test

Your appliance features a self-test programme which displays the fault which your customer service can rectify.

1. Press **S** button to open the main menu.
2. Press ❯ button to move to the **Self-test** menu item.
3. Press ✓ button to start the self-test.
   The self-test starts.
4. If faults are present, they will be displayed. In this case, follow the instructions.
5. The appliance restarts.
6. The message that the self-test has finished is displayed for 10 seconds. To acknowledge the message, press ✓ button.

When the self-test has ended, the appliance switches over to normal operation.

Repair order and advice on faults

Contact information for all countries can be found on the enclosed customer service list.

GB	0344 892 8988	Calls charged at local or mobile rate.
IE	01450 2655	0.03 € per minute at peak. Off peak 0.0088 € per minute.
US	877 442 4436	toll-free

Gaggenau Hausgeräte GmbH
Carl-Wery-Straße 34
D-81739 München
www.gaggenau.com

8001040969 (9711)
en

GAGGENAU